July 29, 1941. V. N. SEAL 2,251,169

DIPPER TOOTH

Filed July 16, 1940

Fig. 1.

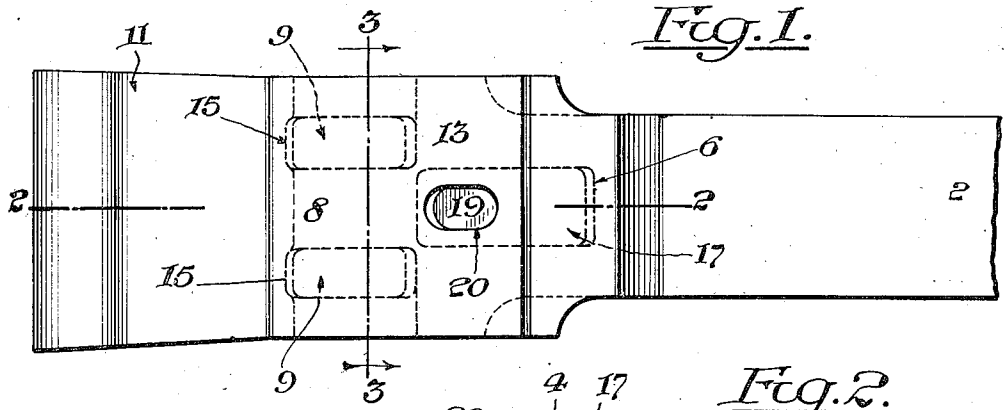

Fig. 2.

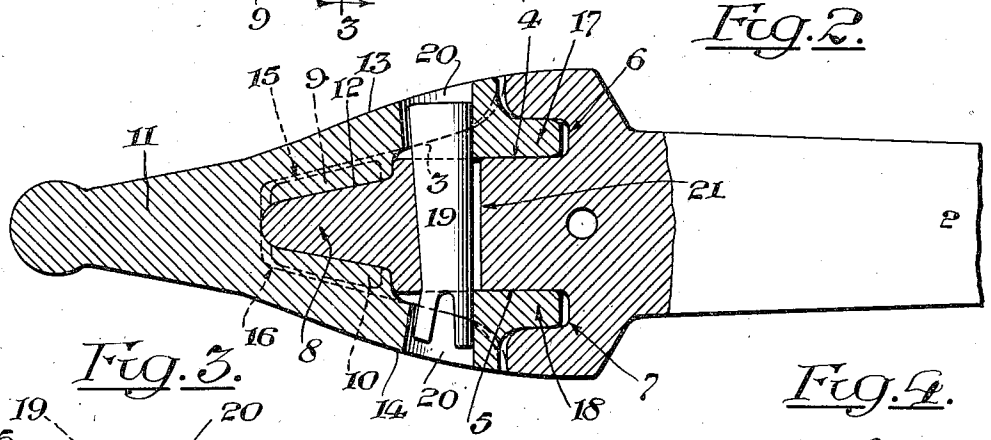

Fig. 3.

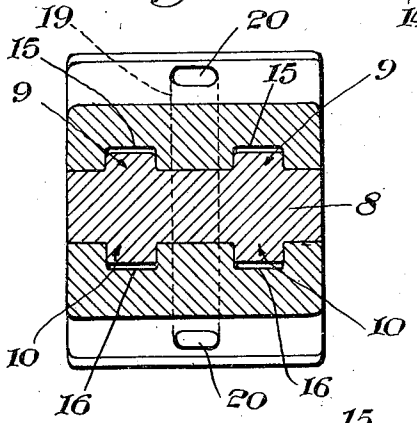

Fig. 4.

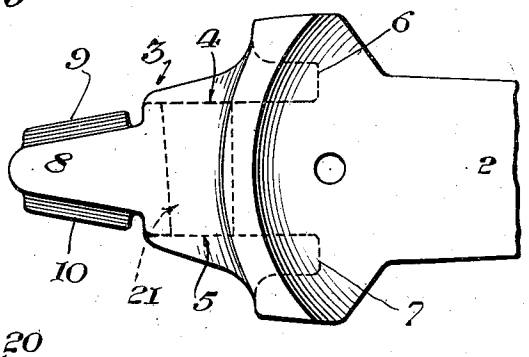

Fig. 5.

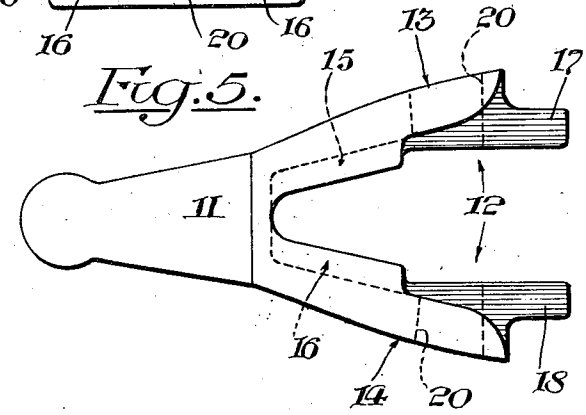

Inventor:
Voorhees N. Seal
by his Attorney
E. M. Reed

Patented July 29, 1941

2,251,169

UNITED STATES PATENT OFFICE

2,251,169

DIPPER TOOTH

Voorhees N. Seal, Carlisle, Pa., assignor to The Frog, Switch & Manufacturing Company, Carlisle, Pa., a corporation of Pennsylvania

Application July 16, 1940, Serial No. 345,699

14 Claims. (Cl. 37—142)

This invention relates to dipper teeth especially adapted for use in connection with dippers in excavating machines and the like, the invention having to do particularly with an improvement in detachable reversible two-part dipper teeth.

An object of the invention is the provision of a dipper tooth having improved means for interlocking the point and nose so as to resist spreading of the bifurcated ends of the point and prevent side movement or thrust while, at the same time, providing a more economical construction from a molding and fitting standpoint to produce than those heretofore made.

It has been the common practice to provide the points of a dipper tooth with a connecting web at the bifurcated end but, in practice, the use of this type of point has shown that, due to side thrust, there is a tendency to break off the tapered nose, aside from the difficulties of machining such a point as well as those formed with a boxed or semi-box nosed point, especially when, as is usual, they are made of manganese steel which can only be machined by grinding operations.

Therefore, the primary object of the present invention is to provide an improved two-part dipper tooth in which the detachable and reversible point and its cooperating nose are so constructed as to avoid these disadvantages, the present construction being an improvement upon that shown and described in my Patent No. 1,485,434 of March 4th, 1924.

In the drawing accompanying and forming a part of this specification, Fig. 1 is a top view of this improved dipper tooth.

Fig. 2 is a partly sectional view taken on line 2—2 of Fig. 1.

Fig. 3 is a cross sectional view taken on line 3—3 of Fig. 1.

Fig. 4 is a side view of the nose and its body, and

Fig. 5 is a side view of the detachable and reversible point.

Similar characters of reference indicate corresponding parts in the several views.

Before explaining in detail the present improvement and mode of operation thereof, I desire to have it understood that the invention is not limited to the details of construction and arrangement of parts illustrated in the accompanying drawing since the invention is capable of other embodiments, and that the phraseology employed is for the purpose of description and not of limitation.

In the preferred embodiment shown in the drawing, this improved dipper tooth comprises a base or body 2 constructed for attachment to an excavating bucket, the forward end of which has a projecting nose 3 formed with straight or untapered parallel top and bottom faces 4 and 5 terminating at their rear ends in a pair of sockets or walled-in recesses 6 and 7 located midway of the nose and, therefore, of considerably less width than the nose.

These untapered faces 4 and 5 in front of these sockets or recesses 6 are flanked by upstanding side walls having flaring top edges between which the inner ends of the rearwardly extending lugs or tangs 17 and 18 are received as hereinafter explained. Projecting forwardly of these parallel untapered surfaces 4 and 5, the nose terminates in a wedge or tapered portion 8 having at the top and bottom, lugs or keys 9 and 10, shown in this instance as arranged in pairs, each to one side of the median line of the base and, therefore, to one side of the midway-located sockets or recesses 6—7 whereby the ribs and recesses at the top and also those at the bottom are alternately located.

The detachable and reversible point 11 having variously formed working tips or ends according to the work to be done is bifurcated rearwardly of the working end as at 12 to form a pair of rearwardly extending arms 13 and 14 of substantially the same width as the nose, forming a converging or wedge-shaped recess for the reception of the tapered or wedge-shaped end of the nose, the arms having in the rear of this converging recess, rearwardly extending flaring portions conforming to the shape of the upstanding side walls hereinbefore described. Each arm midway thereof is reinforced on the inner face thereof (see Fig. 5) by the lugs 17—18 which extend forwardly, thus forming a relatively thick integral portion in which the bolt opening is located and which portion has an untapered or straight under face adapted to fit the untapered faces 4—5 of the nose in the rear of its wedge-formed end and snugly fit between the upstanding walls hereinbefore referred to on the nose, these reinforced portions extending rearwardly to form the pair of integral spaced parallel tangs or lugs 17 and 18 fitting into the sockets or recesses 6—7 of the nose.

The arms 13—14 at the converging or wedge-shaped portion thereof have a pair of lengthwise tapered recesses 15 and 16 for the reception of the pairs of tapered ribs or keys 9 and 10 on the wedge-formed end of the nose and which ribs or keys are out of alignment with the lugs 17—18 and thus alternate therewith and the ribs and re-

cesses are so located as to provide at the outer sides thereof relatively wide tapered engaging faces between the nose and point and wider tapered engaging faces between the ribs while the untapered portions 4—5 resist the tendency of the tapered portions to slip from each other. These integral pairs of ribs materially eliminate any side movement of the point on the nose caused by rock or earth becoming wedged between the teeth as they are used on a dipper bucket in sets of two or more, according to the width of the bucket.

Thus, the nose is provided with pairs of lugs or keys 9 and 10 interlocking with similarly formed pairs of sockets 15 and 16 of the point while the point is provided with a pair of rearwardly extending lugs 17 and 18 fitting into and interlocking with the recesses or sockets 6 and 7 of the nose, the construction being such that it not only takes up the thrust in digging but prevents spreading of the arms 13 and 14 in a very effective manner, as has been found in practice, and also sidewise play or thrust of the parts relative to each other while, at the same time, the simplicity of the construction is such that it can be more expeditiously and efficiently manufactured and assembled with considerably less machining than heretofore required, resulting in a more economically produced as well as a stronger structure of this character.

For connecting the point and nose, a tapered wedge-shaped pin or bolt 19 is provided extending through openings 20 of the arms in front of the rearwardly extending portions of the lugs 17—18 and a registering opening 21 of the nose, this opening 21 being located between the rear ends of the pairs of lugs or keys 9 and 10 of the nose and the rearwardly extending portions of the lugs or tangs 17 and 18 thereof, thus locating this bolt at such point that it does not extend through the narrow lug ends 17 and 18 of the point, not only eliminating the use of a pair of such bolts but so locating it that it extends through the main reinforced portion of the arms of the point and the nose where it will be most effective. One end of this pin or bolt 19 is forked to permit it to spread and so prevent the bolt from working loose.

From the foregoing, it will be seen that the rearward lugs 17 and 18 fitting into the recessed portions 6 and 7 of the nose effectively prevent spreading of the arms of the point and take up the thrust while the pairs of interlocked lugs or keys 9 and 10 and sockets or recesses 15 and 16 of the point reinforce the structure and eliminate the necessity of connecting the arms of the point by a web as heretofore which leaves the point with a free open space between the arms for grinding and fitting whereby molding and fitting of the parts is facilitated but also side thrust is prevented. Thus, this construction provides a nose and a point having at the top and also at the bottom, interlocking pairs of projections and recesses, with the pairs at the top and also at the bottom spaced apart, each pair located substantially between the median line of the point and a side thereof with a relatively flat land surface at the outer side of each pair, in consequence of which, any sidewise rocking, turning, twisting or pivoting of the point on its nose or the lifting of one side thereof is prevented, and which is the tendency in those prior constructions where the interlocking parts extend substantially midway of the length of the tapered point and nose.

It is to be understood that by describing in detail herein any particular form, structure or arrangement, it is not intended to limit the invention beyond the terms of the several claims or the requirements of the prior art.

Having thus explained the nature of my said invention and described a way of constructing and using the same, although without attempting to set forth all of the forms in which it may be made or all of the modes of its use, I claim:

1. A dipper tooth comprising a nose having a tapered or wedge-shaped end and at the rear of the nose a pair of sockets or recesses, a bifurcated point having a converging or wedge-shaped recess for the reception of the wedge-shaped end of the nose and also having at the rear thereof a pair of tangs or lugs fitting into the sockets or recesses of the nose, said nose and point having two pairs of cooperating engaging converging ribs and recesses at the tapered end of the nose, each pair spaced apart, each located to one side of the median line of the dipper tooth, and means located between the rear ends of the converging ribs and the rearwardly extending portions of the lugs for bolting the point and nose together.

2. The dipper tooth of claim 1 in which the ribs are carried by the tapered end of the nose and the cooperating recesses by the point.

3. The dipper tooth of claim 1 in which each rib of the pair is located out of alignment with the rearwardly extending lugs or tangs of the point whereby it is in alternation therewith.

4. The dipper tooth of claim 1 in which each rib and its recess of the pair is located substantially midway between the median line of the point and the outer side thereof to provide relatively wide engaging faces at the outer sides of the nose and point.

5. The dipper tooth of claim 1 in which the ribs and recesses are so located as to provide at the outer sides thereof relatively wide tapered engaging faces between the nose and the point and wider tapered engaging faces between the ribs.

6. A dipper tooth comprising a nose having a tapered or wedge-shaped end and at the rear of the nose a pair of sockets or recesses and in front of such sockets or recesses a pair of upstanding side walls, a bifurcated point comprising a pair of arms having a converging or wedge-shaped recess for the reception of the wedge-shaped end of the nose and also having at the rear thereof a pair of tangs or lugs fitting into the sockets or recesses of the nose, said lugs extending forwardly and reinforcing the rear ends of the arms in the rear of the wedge-shaped recess, said nose and point having two pairs of cooperating engaging converging ribs and recesses at the tapered end of the nose, each pair spaced apart, and means located between the rear ends of the converging ribs and the rearwardly extending portions of the lugs and projecting through the arm reinforcing portions of said lugs for bolting the point and nose together.

7. The dipper tooth of claim 6 in which the ribs are carried by the tapered end of the nose and the cooperating recesses by the point.

8. The dipper tooth of claim 6 in which each rib of the pair is located out of alignment with the rearwardly extending lugs or tangs of the point.

9. A dipper tooth comprising a nose having a tapered or wedge-shaped end terminating in the rear thereof in untapered top and bottom faces having upstanding side walls and having at the rear thereof a pair of sockets or recesses, a bifurcated point comprising a pair of arms having a tapered or wedge-shaped recess for the recep-

tion of the wedge-shaped end of the nose and terminating in a similar pair of untapered faces fitting the untapered faces of the nose between the upstanding side walls thereof and also having at the rear thereof a pair of relatively narrow arm reinforcing lugs or tangs fitting into the sockets of the nose whereby the cooperating untapered faces are between the wedge-shaped recess and the rearwardly extending portions of the lugs, the tapered ends of the nose and point having two pairs of cooperating interlocking converging ribs and recesses, each pair spaced apart, each located to one side of the median line of the dipper tooth, and means located in the untapered portions of the point and nose and between the converging ends thereof and the rearwardly extending portions of the lugs and through the arm reinforcing portions thereof for bolting the point and nose together.

10. The dipper tooth of claim 9 in which each rib of the pair is located out of alignment with the rearwardly extending lugs or tangs of the point whereby it is in alternation therewith and in which each rib and its recess of the pair is located substantially midway between the median line of the point and the outer side thereof and provides relatively wide engaging faces at the outer sides of the nose and point.

11. The dipper tooth of claim 9 in which the ribs and recesses are so located as to provide at the outer sides thereof relatively wide tapered engaging faces between the nose and the point and wider tapered engaging faces between the ribs.

12. A dipper tooth comprising a nose having a tapered or wedge-shaped end and at the rear of the nose a pair of sockets or recesses and in front of such sockets or recesses, a pair of upstanding side walls, a bifurcated point comprising a pair of arms having a converging or wedge-shaped recess for the reception of the wedge-shaped end of the nose and also having at the rear thereof a pair of tangs or lugs fitting into the sockets or recesses of the nose, said lugs extending forwardly between said side walls and reinforcing the rear ends of the arms in the rear of the wedge-shaped recess, said nose and point having cooperating engaging converging ribs and recesses at the tapered end of the nose, and means located between the rear ends of the converging ribs and the rearwardly extending portions of the lugs and projecting through the arm reinforcing portions of said lugs for bolting the point and nose together.

13. A dipper tooth base having a wedge-shaped nose provided with two pairs of spaced ribs each to one side of the median line of the nose and in the rear thereof upstanding side walls forming therebetween a lug receiving recess with a bolt opening located between said upstanding side walls, and in the rear thereof a lug receiving socket or recess.

14. A dipper tooth point having a pair of rearwardly extending arms forming a wedge-shaped recess having in its opposing walls two pairs of spaced converging recesses, each to one side of the median line of the point, the ends of the arms in the rear of said recesses each having midway thereof a reinforcing rearwardly extending lug, each arm having a bolt opening located between the inner ends of its recesses and the rearwardly extending portion of said lug and through the inner reinforcing end of said lug and its arm.

VOORHEES N. SEAL.