(12) INTERNATIONAL APPLICATION PUBLISHED UNDER THE PATENT COOPERATION TREATY (PCT)

(19) World Intellectual Property Organization
International Bureau

(43) International Publication Date
3 November 2011 (03.11.2011)

PCT

(10) International Publication Number
WO 2011/136714 A1

(51) International Patent Classification:
E21B 17/042 (2006.01) *E21B 10/52* (2006.01)

(21) International Application Number:
PCT/SE2011/050153

(22) International Filing Date:
11 February 2011 (11.02.2011)

(25) Filing Language: English

(26) Publication Language: English

(30) Priority Data:
10161383.4 29 April 2010 (29.04.2010) EP

(71) Applicant *(for all designated States except US)*: **SANDVIK INTELLECTUAL PROPERTY AB** [SE/SE]; S-811 81 Sandviken (SE).

(72) Inventors; and
(75) Inventors/Applicants *(for US only)*: **CARLSTRÖM, Bo** [SE/SE]; Idrottsvägen 24 C, S-811 32 Sandviken (SE). **SUNDIN, Jens** [SE/SE]; Klasbärsvägen38, S-806 36 Gävle (SE). **LEJON, Susanne** [SE/SE]; Seljansögatan 13 D, S-811 62 Sandviken (SE).

(74) Agent: **CARLSSON, Lars-Åke**; Sandvik Intellectual Property AB, S-811 81 Sandviken (SE).

(81) Designated States *(unless otherwise indicated, for every kind of national protection available)*: AE, AG, AL, AM, AO, AT, AU, AZ, BA, BB, BG, BH, BR, BW, BY, BZ, CA, CH, CL, CN, CO, CR, CU, CZ, DE, DK, DM, DO, DZ, EC, EE, EG, ES, FI, GB, GD, GE, GH, GM, GT, HN, HR, HU, ID, IL, IN, IS, JP, KE, KG, KM, KN, KP, KR, KZ, LA, LC, LK, LR, LS, LT, LU, LY, MA, MD, ME, MG, MK, MN, MW, MX, MY, MZ, NA, NG, NI, NO, NZ, OM, PE, PG, PH, PL, PT, RO, RS, RU, SC, SD, SE, SG, SK, SL, SM, ST, SV, SY, TH, TJ, TM, TN, TR, TT, TZ, UA, UG, US, UZ, VC, VN, ZA, ZM, ZW.

(84) Designated States *(unless otherwise indicated, for every kind of regional protection available)*: ARIPO (BW, GH, GM, KE, LR, LS, MW, MZ, NA, SD, SL, SZ, TZ, UG, ZM, ZW), Eurasian (AM, AZ, BY, KG, KZ, MD, RU, TJ, TM), European (AL, AT, BE, BG, CH, CY, CZ, DE, DK, EE, ES, FI, FR, GB, GR, HR, HU, IE, IS, IT, LT, LU,

[Continued on next page]

(54) Title: DRILL BIT FOR PERCUSSIVE ROCK DRILLING

(57) Abstract: The invention relates to a drill bit (20) for percussive rock drilling, which comprises: - a drill head (21); - a skirt (24), which has a first end and an opposite second end, the skirt being connected to the drill head at said first end; - a recess (25) extending axially through the skirt from the second end of the skirt towards the first end thereof, the recess being provided with an internal, cylindrical female thread (26); and - an impact surface (27) at the bottom of the recess. Every cross-section of the recess (25) between the impact surface and the part of the recess where the female thread has its full thread profile has a cross-sectional area which is smaller than the cross- sectional area of a cross-section of the recess at the part of the recess where the female thread has its full thread profile.

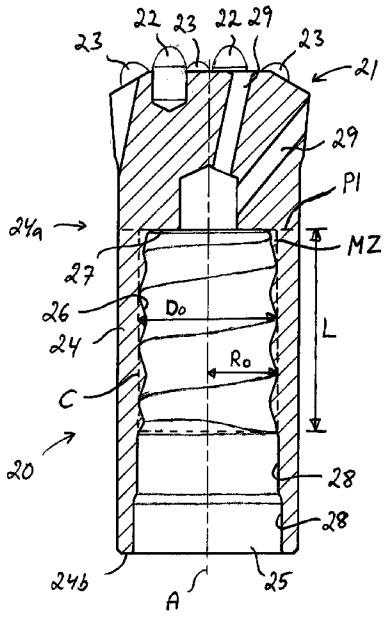

Fig 2

WO 2011/136714 A1

LV, MC, MK, MT, NL, NO, PL, PT, RO, RS, SE, SI, SK, SM, TR), OAPI (BF, BJ, CF, CG, CI, CM, GA, GN, GQ, GW, ML, MR, NE, SN, TD, TG).

Declarations under Rule 4.17:

— *as to applicant's entitlement to apply for and be granted a patent (Rule 4.17(ii))*

Published:

— *with international search report (Art. 21(3))*

Drill bit for percussive rock drilling

FIELD OF THE INVENTION AND PRIOR ART

The present invention relates to a drill bit for percussive rock drilling according to the preamble of claim 1.

A previously known drill bit for percussive rock drilling configured in accordance with the preamble of claim 1 is illustrated in Fig 1. A drill bit of this type is for instance disclosed in WO 2004/003334 A1 (and US 2002/074797, US 2008/304904 or WO 01/38685). This known drill bit 1 comprises:

- a drill head 2;
- a skirt 3;
- a recess 4 extending axially through the skirt 3 from the rear end of the skirt towards the drill head 2, the recess being provided with an internal female thread 5 for connection to a corresponding external male thread 6 of a drill rod 7 and; and
- an impact surface 8 for abutment against an end surface 9 of a drill rod, this impact surface 8 being formed at the bottom of the recess 4 and extending perpendicularly to the longitudinal axis of the drill bit.

The part of the recess 4 between the inner end of the female thread 5 and the impact surface 8 is wider than the female thread so as to provide a thread clearance 10 at the inner end of the female thread.

Each of US 3258077A and US 3258284 A discloses a drill bit having a shoulder abutment. JP 8 151885 A, on which the preamble of claim 1 is based, discloses a drill bit with locally increased diameter of the drill bit in the vicinity of the impact surface.

SUMMARY OF THE INVENTION

The object of the present invention is to achieve a further development of a drill bit of the above-mentioned type so as to provide a drill bit which is improved in at least some aspects.

According to the invention, this object is achieved by a drill bit having the features defined in claim 1.

The drill bit of the present invention comprises:

- a drill head;
- a skirt, which has a first end and an opposite second end, the skirt being connected to the drill head at said first end;
- a recess extending axially through the skirt from the second end of the skirt towards the first end thereof, the recess being provided with an internal, cylindrical female thread for connection to a corresponding external, cylindrical male thread of a drill rod; and
- an impact surface for abutment against an end surface of a drill rod, this impact surface being formed at the bottom of the recess and extending perpendicularly to the longitudinal axis of the drill bit.

According to the invention, every cross-section of the recess between the impact surface and the part of the recess where the female thread has its full thread profile has a cross-sectional area which is smaller than the cross-sectional area of a cross-section of the recess at the part of the recess where the female thread has its full thread profile.

Thus, the drill bit of the present invention lacks a widened thread clearance between the inner end of the female thread and the impact

surface. Such a thread clearance will give a reduced thickness of the skirt wall in the part of the skirt wall surrounding the thread clearance as compared to the part of the skirt wall surrounding the female thread. Such a part of the skirt wall with reduced wall thickness, and consequently reduced cross-sectional area of the skirt wall, will constitute a weakened part or fracture zone FZ (see Fig 1) at the drill bit. The present invention is based on the realization that the strength of the drill bit can be improved by dispensing with a thread clearance between the inner end of the female thread and the impact surface. The strength improvement has been measured to 18% for a drill bit according to the present invention as compared to a corresponding drill bit according the above-mentioned prior art. Without such a thread clearance, the recess of the drill bit can be formed in such a manner that every cross-section of the recess between the impact surface and the part of the recess where the female thread has its full thread profile has a cross-sectional area which is smaller than the cross-sectional area of a cross-section of the recess at the part of the recess where the female thread has its full thread profile. Hereby, no point of reduced strength is introduced in the part of the skirt extending between the impact surface and the female thread.

In this description and the subsequent claims, the expression “cross-section of the recess” refers to a section across the recess perpendicularly to the longitudinal axis of the drill bit.

Further advantages as well as advantageous features of the drill bit according to the invention will appear from the following description and the dependent claims.

BRIEF DESCRIPTION OF THE DRAWING

With reference to the appended drawing, a specific description of preferred embodiments of the invention cited as examples follows below. In the drawings:

Fig 1 is a partly cut lateral view of a drill bit according to prior art connected to a drill rod,

Fig 2 is a partly cut lateral view of a drill bit according to an embodiment of the present invention, and

Fig 3 is a partly cut lateral view of the drill bit according to Fig 2 connected to a drill rod.

DETAILED DESCRIPTION OF PREFERRED EMBODIMENTS OF THE INVENTION

A drill bit 20 for percussive rock drilling according to an embodiment of the present invention is illustrated in Figs 2 and 3. This drill bit 20 comprises a drill head 21, which is provided with rock cutting members 22, 23 at its front end. In the illustrated embodiment, the rock cutting members are constituted by cemented carbide inserts in the form of front buttons 22 and peripheral buttons 23. At its rear end, the drill head 21 is connected to a skirt 24. The drill head 21 and the skirt 24 are formed in one piece of a suitable metallic material, such as for instance steel.

The skirt 24 has a first end 24a, through which the skirt is connected to the drill head 21, and an opposite second end 24b. A recess 25 extends axially through the skirt 24 from the second end 24b of the skirt towards the first end 24a thereof. This recess 25 is provided with an internal, cylindrical female thread 26 for connection to a corresponding external, cylindrical male thread 36 provided at an end

of a drill rod 30. The female and male threads may be of any conventional thread form, such as rope threads or trapezoidal threads. The thread form shown in the figures is a rope thread. An impact surface 27 for abutment against an end surface 37 of a drill rod 30 is formed at the bottom of the recess 25. This impact surface 27 extends perpendicularly to the longitudinal axis A of the drill bit 20. The recess 25 is suitably provided with one or more unthreaded cylindrical surfaces 28 between the outer end of the female rope thread 26 and the second end 24b of the skirt 24, as illustrated in Figs 2 and 3. The recess 25 is in fluid communication with the front end of the drill head 21 through a number of flush channels 29 extending through the drill head. When the drill bit 20 is connected to a drill rod 30 with the female thread 26 of the drill bit in engagement with the male thread 36 of the drill rod and with the impact surface 27 of the drill bit in abutment against the end surface 37 of the drill rod (as illustrated in Fig 3), the flush channels 29 of the drill bit are in fluid communication with a flush channel (not shown) which extends axially through the drill rod along the centre axis thereof.

Every cross-section of the recess 25 along the part of the recess where the thread 26 has its full thread profile has one and the same cross-sectional area. The expression “full thread profile” can be defined as the profile which is present along a majority of the entire thread length.

No thread clearance is provided in the recess 25 between the inner end of the female thread 26 and the impact surface 27, and every cross-section of the recess 25 between the impact surface 27 and the part of the recess where the female thread 26 has its full thread profile has a cross-sectional area which is smaller than the cross-sectional area of a cross-section of the recess 25 at said part of the recess where the female thread 26 has its full thread profile.

The recess 25 has its smallest cross-sectional area at its bottom and the impact surface 27 defines the smallest radial cross-sectional area of the recess 25. Thus, the area of the impact surface 27 is smaller than the cross-sectional area of any cross-section of the recess 25 between the impact surface 27 and the second end 24b of the skirt 24.

It can also be seen in Fig 2 that the cross-sectional area of the recess 25 is gradually reduced from the inner end of the female thread 26 to the impact surface 27. The radial cross-sectional area of the recess 25 continuously increases along the recess from the impact surface 27 all the way on to the part of the recess where the female thread 26 has its full thread profile. The axial distance between the impact surface 27 and the inner end of the part of the recess where the female thread 26 has its full thread profile is preferably 8-12 mm, which implies that the part of the recess where the female thread 26 has its full thread profile begins 8-12 mm from the impact surface 27 as seen in the axial direction.

The radial distance Ro from the longitudinal axis A of the drill bit 20 to the deepest point of the thread bottom of the female thread 26, i.e. the largest radius of the female thread, is preferably equal to or smaller than 18.5 mm at the part of the recess where the female thread has its full thread profile.

Preferably, the female thread 26 has 2.8-3.2 thread turns with full thread profile.

An imaginary cylinder C is illustrated in broken lines in Fig 2. This imaginary cylinder C has such a diameter Do that its envelope surface touches the deepest point of the thread bottom of the female thread

along the part of the recess where the female thread 26 has its full thread profile. Thus, $Do=2 \cdot Ro$.

The diameter Do of said imaginary cylinder C is preferably equal to or smaller than 37 mm, while fulfilling the following condition:

$$1.3 \leq L/Do \leq 1.6$$

where L is the axial distance from the impact surface 27 to the outer end of the part of the recess where the female thread 26 has its full thread profile.

An annular material zone MZ is formed between a cross-sectional plane P1 extending through the impact surface 27 and the envelope surface of the above-mentioned imaginary cylinder C. The annular material zone MZ forms an area at a certain axial cross-section that tapers towards where the female thread has its full thread profile.

The drill bit 20 is to be used for percussive rock drilling with the drill bit 20 connected to a top hammer device through one or more drill rods 30.

With the drill bit 20 according to the present invention, it will be possible to provide a longer female thread 26, and thereby a longer contact surface between the female thread 26 of the drill bit 20 and the corresponding male thread 36 of the drill rod 30, as compared to a drill bit according to the above-mentioned prior art, without increasing the axial distance L from the impact surface 27 to the outer end of the part of the recess where the female thread 26 has its full thread profile. Furthermore, there will be better possibilities to alter the space for cuttings removal while maintaining the skirt sufficiently strong, or to increase the strength of the skirt 24, due to the fact that

the wall of the skirt 24 can be designed without having to take into account any fracture zone at the inner end of the skirt. The presently claimed drill bit i.a. solves the problem of weak skirts, i.e. by increasing the wall thickness without affecting the outside of the drill bit.

It should be noted that the female thread 26 of the drill bit according to the present invention is a cylindrical thread and not the type of conical thread used in drill pipes or drill tubes for rotary oil drilling.

The invention is of course not in any way restricted to the embodiment described above. On the contrary, many possibilities to modifications thereof will be apparent to a person with ordinary skill in the art without departing from the basic idea of the invention such as defined in the appended claims.

The disclosures in European patent application No. 10161383.4, from which this application claims priority, are incorporated herein by reference.

CLAIMS

1. A drill bit for percussive rock drilling, which drill bit (20) comprises:
- a drill head (21);
- a skirt (24), which has a first end (24a) and an opposite second end (24a), the skirt being connected to the drill head (21) at said first end (24a);
- a recess (25) extending axially through the skirt (24) from the second end (24b) of the skirt towards the first end (24a) thereof, the recess being provided with an internal, cylindrical female thread (26) for connection to a corresponding external, cylindrical male thread of a drill rod; and
- an impact surface (27) for abutment against an end surface of a drill rod, this impact surface (27) being formed at the bottom of the recess (25) and extending perpendicularly to the longitudinal axis (A) of the drill bit,
characterized in, that every cross-section of the recess (25) between the impact surface (27) and the part of the recess where the female thread (26) has its full thread profile has a cross-sectional area which is smaller than the cross-sectional area of a cross-section of the recess (25) at the part of the recess where the female thread has its full thread profile.

2. A drill bit according to claim 1, **characterized** in that the impact surface (27) defines the smallest radial cross-sectional area of the recess (25).

3. A drill bit according to claim 1 or 2, **characterized** in that the radial cross-sectional area of the recess (25) continuously increases along the recess from the impact surface (27) all the way on to the part of the recess where the female thread (26) has its full thread profile.

4. A drill bit according to anyone of claims 1-3, **characterized** in that an annular material zone (MZ) is formed between a cross-sectional plane (P1) containing the impact surface (27) and the envelope surface of an imaginary cylinder (C) which has such a diameter (Do) that its envelope surface touches the deepest point of the thread bottom of the female thread along the part of the recess where the female thread (26) has its full thread profile.

5. A drill bit according to claim 4, **characterized** in that the diameter (Do) of said imaginary cylinder (C) is equal to or smaller than 37 mm, while fulfilling the following condition:

$$1.3 \leq L/Do \leq 1.6$$

where Do is the diameter of the imaginary cylinder (C) and L is the axial distance from the impact surface (27) to the outer end of the part of the recess where the female thread (26) has its full thread profile.

6. A drill bit according to anyone of claims 1-5, **characterized** in that the axial distance between the impact surface (27) and the inner end of the part of the recess where the female thread (26) has its full thread profile is 8-12 mm.

7. A drill bit according to anyone of claims 1-6, **characterized** in that the radial distance (Ro) from the longitudinal axis (A) of the drill bit (20) to the deepest point of the thread bottom of the female thread (26) is equal to or smaller than 18.5 mm at the part of the recess where the female thread has its full thread profile.

8. A drill bit according to anyone of claims 1-7, **characterized** in that the number of thread turns with full thread profile of the female thread (26) is 2.8-3.2.

9. A drill bit according to anyone of claims 1-8, **characterized** in that the recess (25) is provided with at least one unthreaded cylindrical surface (28) between the female thread (26) and said second end (24b) of the skirt (24).

10. A drill bit according to anyone of claims 1-9, **characterized** in that rock cutting members in the form of front buttons (22) and peripheral buttons (23) are provided at the front end of the drill head (21).

11. A drill bit according to anyone of claims 1-10, **characterized** in that the recess (25) is in fluid communication with the front end of the drill head (21) through one or more flush channels (29) extending through the drill head.

12. A drill bit according to anyone of claims 1-11, **characterized** in that the female thread (26) is a rope thread or a trapezoidal thread.

13. Use of a drill bit according to anyone of claims 1-12 for percussive rock drilling, wherein the drill bit (20) is connected to a top hammer device through one or more drill rods (30).

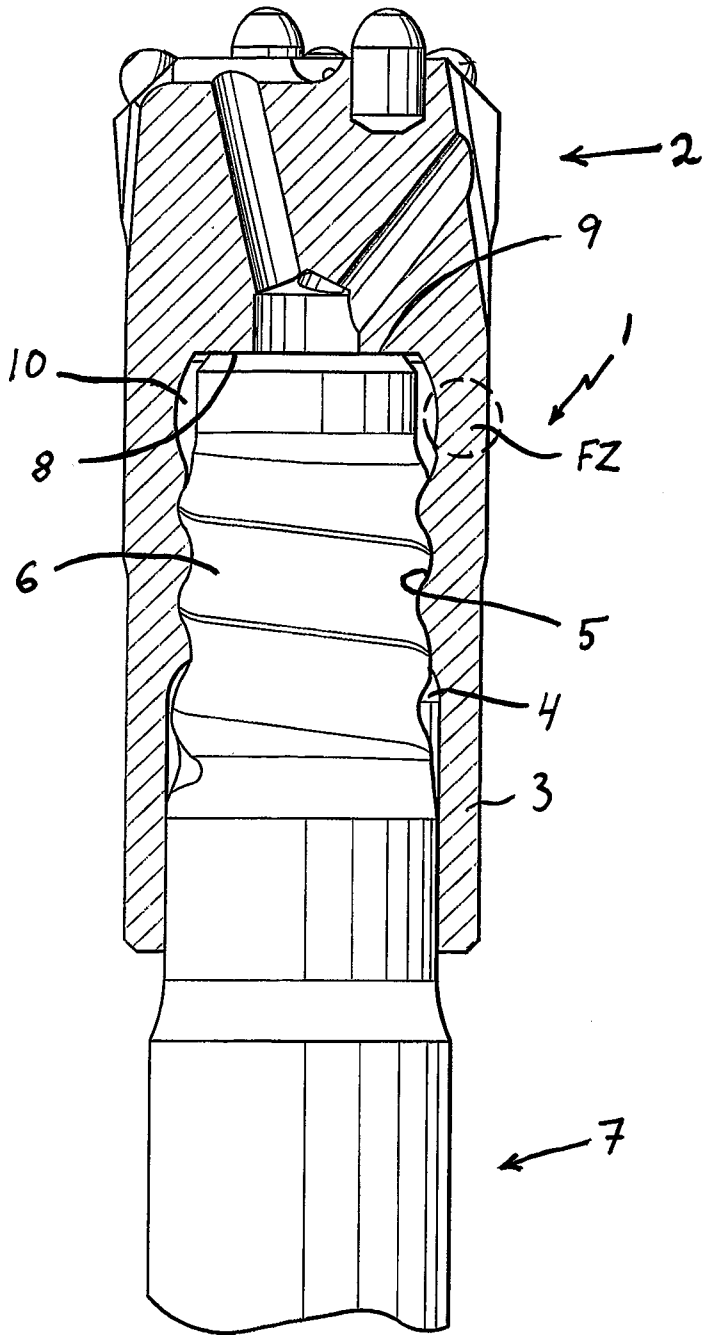

Fig 1

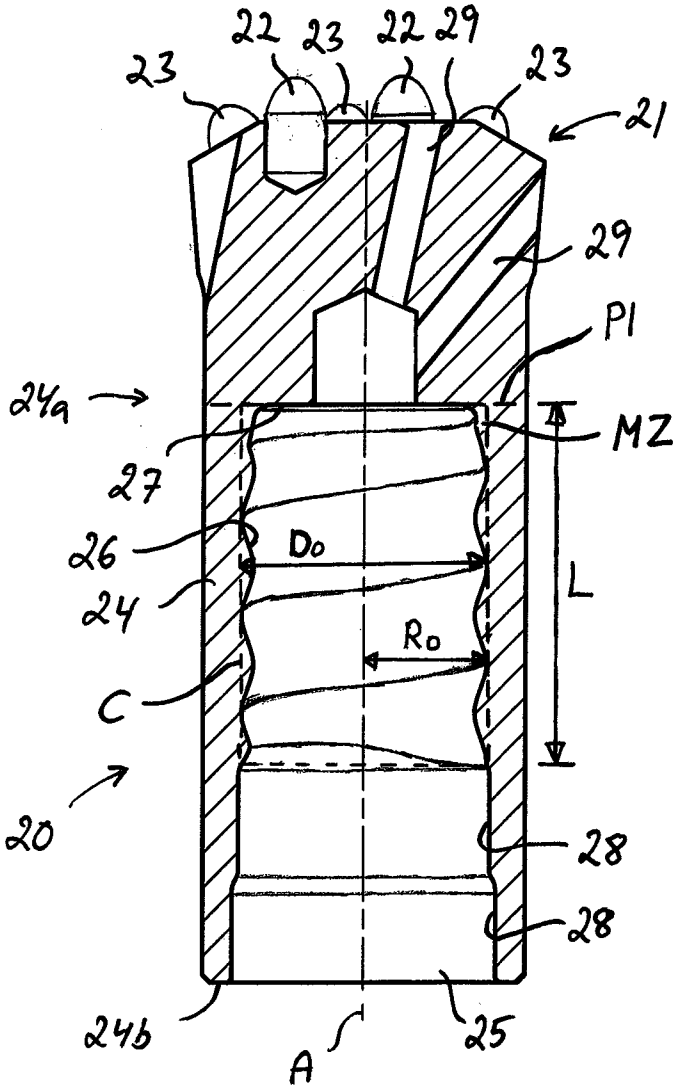

Fig 2

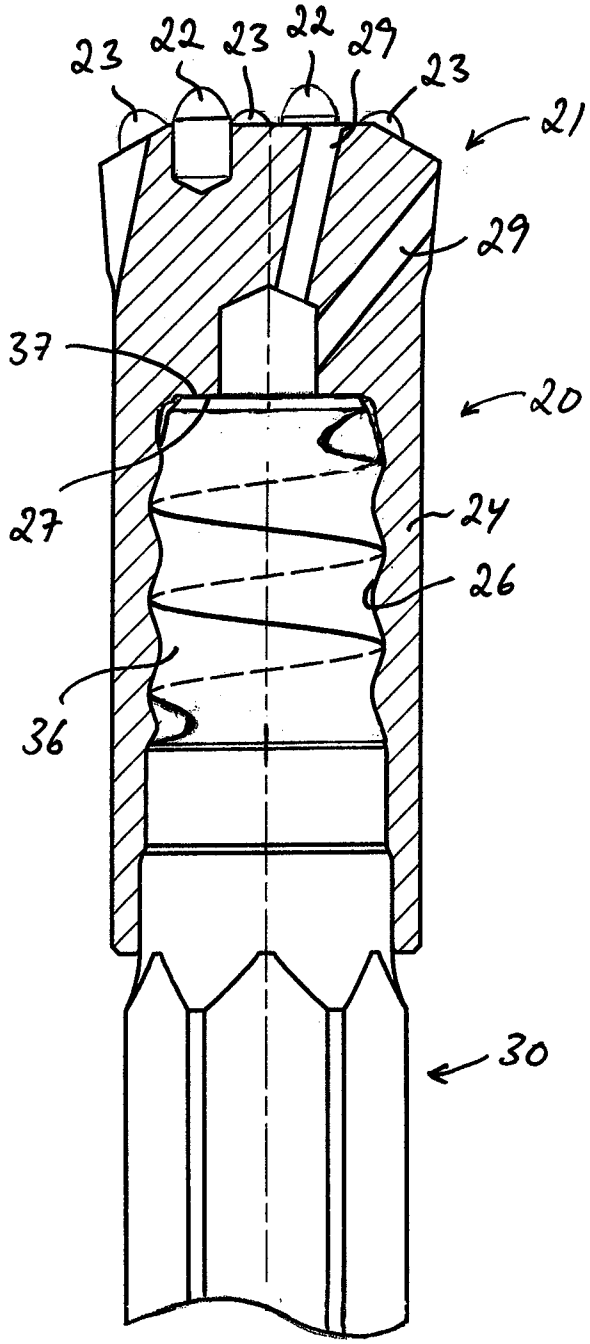

Fig 3

INTERNATIONAL SEARCH REPORT

International application No.
PCT/SE2011/050153

A. CLASSIFICATION OF SUBJECT MATTER

IPC: see extra sheet

According to International Patent Classification (IPC) or to both national classification and IPC

B. FIELDS SEARCHED

Minimum documentation searched (classification system followed by classification symbols)

IPC: E21B

Documentation searched other than minimum documentation to the extent that such documents are included in the fields searched

SE, DK, FI, NO classes as above

Electronic data base consulted during the international search (name of data base and, where practicable, search terms used)

EPO-Internal, PAJ, WPI data

C. DOCUMENTS CONSIDERED TO BE RELEVANT

Category*	Citation of document, with indication, where appropriate, of the relevant passages	Relevant to claim No.
Y	US 20080304904 A1 (OLSSON URBAN ET AL), 11 December 2008 (2008-12-11); whole document	1-3, 6-13
A	--	4, 5
Y	WO 0019056 A1 (UNIROC AB ET AL), 6 April 2000 (2000-04-06); whole document	1-3, 6-13
A	--	4, 5
A	JP 2006241837 A (MITSUBISHI MATERIALS CORP), 14 September 2006 (2006-09-14); whole document	1-13
	--	

☒ Further documents are listed in the continuation of Box C. ☒ See patent family annex.

* Special categories of cited documents:
"A" document defining the general state of the art which is not considered to be of particular relevance
"E" earlier application or patent but published on or after the international filing date
"L" document which may throw doubts on priority claim(s) or which is cited to establish the publication date of another citation or other special reason (as specified)
"O" document referring to an oral disclosure, use, exhibition or other means
"P" document published prior to the international filing date but later than the priority date claimed
"T" later document published after the international filing date or priority date and not in conflict with the application but cited to understand the principle or theory underlying the invention
"X" document of particular relevance; the claimed invention cannot be considered novel or cannot be considered to involve an inventive step when the document is taken alone
"Y" document of particular relevance; the claimed invention cannot be considered to involve an inventive step when the document is combined with one or more other such documents, such combination being obvious to a person skilled in the art
"&" document member of the same patent family

Date of the actual completion of the international search	Date of mailing of the international search report
11-08-2011	12-08-2011
Name and mailing address of the ISA/SE Patent- och registreringsverket Box 5055 S-102 42 STOCKHOLM Facsimile No. + 46 8 666 02 86	Authorized officer Lisa Sellgren Telephone No. + 46 8 782 25 00

Form PCT/ISA/210 (second sheet) (July 2009)

INTERNATIONAL SEARCH REPORT

International application No.
PCT/SE2011/050153

C (Continuation). DOCUMENTS CONSIDERED TO BE RELEVANT

Category*	Citation of document, with indication, where appropriate, of the relevant passages	Relevant to claim No.
A	JP 2006241836 A (MITSUBISHI MATERIALS CORP), 14 September 2006 (2006-09-14); whole document --	1-13
A	JP 8151885 A (SUMITOMO ELECTRIC INDUSTRIES), 11 June 1996 (1996-06-11); whole document --	1-13
A	US 1733392 A (BARRA JOHN L), 29 October 1929 (1929-10-29); whole document -- --------	1-13

Continuation of: second sheet
International Patent Classification (IPC)
E21B 17/042 (2006.01)
E21B 10/52 (2006.01)

Download your patent documents at www.prv.se
The cited patent documents can be downloaded:

- From "Cited documents" found under our online services at www.prv.se (English version)
- From "Anförda dokument" found under "e-tjänster" at www.prv.se (Swedish version)

Use the application number as username. The password is **RLKLGWLGUT**.

Paper copies can be ordered at a cost of 50 SEK per copy from PRV InterPat (telephone number 08-782 28 85).

Cited literature, if any, will be enclosed in paper form.

US	20080304904	A1	11/12/2008	AT	367507	T	15/08/2007
				AU	2002363701	B2	14/06/2007
				CA	2460727	A1	22/05/2003
				EP	1434924	A1	07/07/2004
				KR	20050034600	A	14/04/2005
				KR	100686501	B1	23/02/2007
				RU	2004114271	A	20/09/2005
				RU	2287659	C2	20/11/2006
				SE	0103407	A	13/04/2003
				SE	522221	C2	27/01/2004
				US	7624822	B2	01/12/2009
				WO	03042493	A1	22/05/2003
				ZA	200402669	A	23/12/2004
WO	0019056	A1	06/04/2000	AT	267338	T	15/06/2004
				AU	1192500	A	17/04/2000
				AU	753562	B2	24/10/2002
				CA	2345575	C	15/05/2007
				DE	69917475	T2	20/04/2006
				EP	1127209	B1	19/05/2004
				ES	2221478	T3	16/12/2004
				RU	2204684	C2	20/05/2003
				SE	9803267	L	29/03/2000
				SE	515518	C2	20/08/2001
				US	6810956	B1	02/11/2004
				ZA	200102512	A	27/03/2002
JP	2006241837	A	14/09/2006	NONE			
JP	2006241836	A	14/09/2006	NONE			
JP	8151885	A	11/06/1996	NONE			
US	1733392	A	29/10/1929	NONE			