F. H. CONNER.

LAMP EXTINGUISHING BURNER.

APPLICATION FILED MAR. 27, 1909.

955,138.

Patented Apr. 19, 1910.

2 SHEETS—SHEET 1.

Fig. 1.

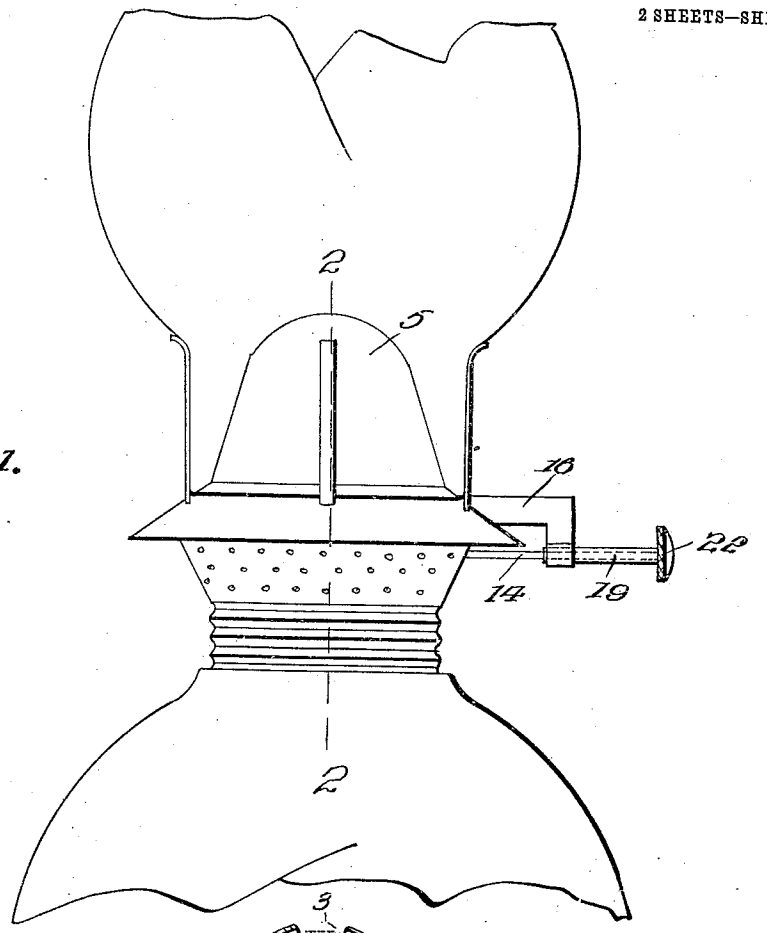

Fig. 2.

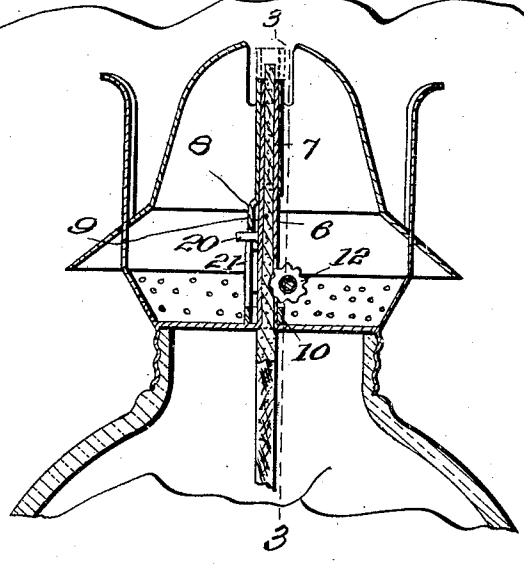

Witnesses

W. N. Goodeon

J. M. Fallin

Inventor

F. H. Conner:

By

Attorneys,

ANDREW B. GRAHAM CO., PHOTO-LITHOGRAPHERS, WASHINGTON, D. C.

F. H. CONNER.

LAMP EXTINGUISHING BURNER.

APPLICATION FILED MAR. 27, 1909.

Patented Apr. 19, 1910.

2 SHEETS—SHEET 2.

955,138.

Fig. 3.

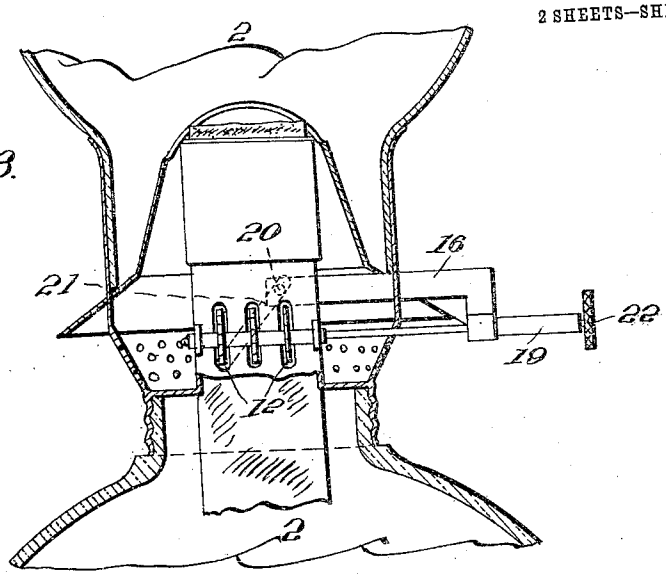

Fig. 6.

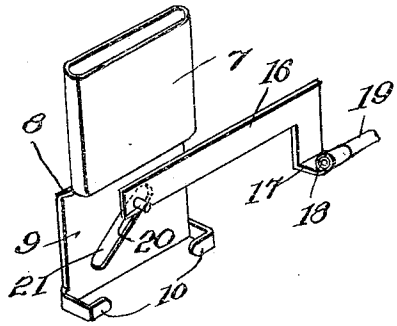

Fig. 4.

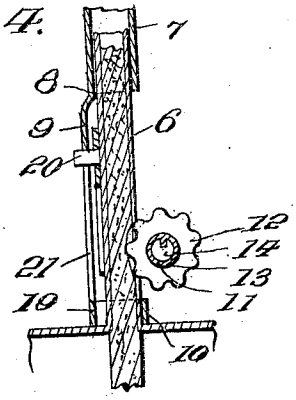

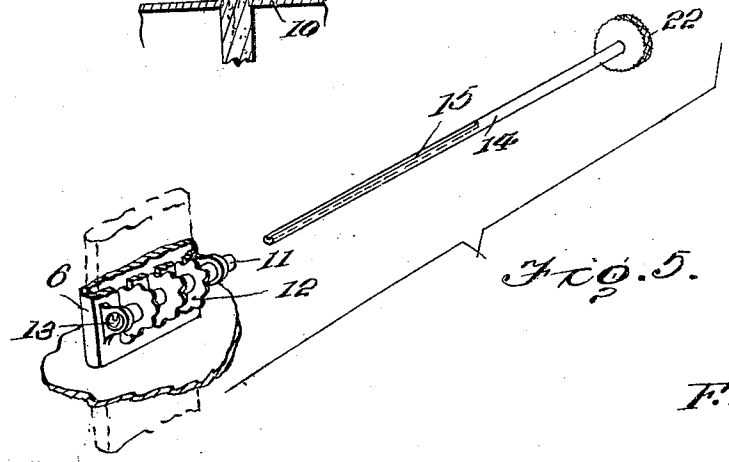

Fig. 5.

Inventor

F. H. Conner.

Witnesses

W. N. Woodson

J. M. Fallin

By H. A. Macy, Attorneys.

ANDREW B. GRAHAM CO., PHOTO-LITHOGRAPHERS, WASHINGTON, D. C.

UNITED STATES PATENT OFFICE.

FREAS H. CONNER, OF HORTON, KANSAS.

LAMP-EXTINGUISHING BURNER.

955,138. Specification of Letters Patent. Patented Apr. 19, 1910.

Application filed March 27, 1909. Serial No. 486,176.

To all whom it may concern:

Be it known that I, FREAS H. CONNER, a citizen of the United States, residing at Horton, in the county of Brown and State of Kansas, have invented certain new and useful Improvements in Lamp-Extinguishing Burners, of which the following is a specification.

This invention relates to lamp burners and more particularly to means for smothering or extinguishing the flame at the burner tip.

The object of the invention is to provide a comparatively simple and inexpensive device of this character which is capable of being attached to an ordinary lamp burner, and by means of which the flame may be smothered or extinguished without the necessity of blowing down the chimney or removing the latter from the lamp burner to effect the extinguishment of the flame.

A further object is to provide a lamp burner attachment including a tubular flame extinguishing member mounted for vertical movement on the wick tube and having a laterally movable actuating member operatively connected thereto for moving the tubular member to operative position above the upper end of the wick tube, thereby to smother or extinguish the flame.

A further object is to provide means for raising and lowering the wick, said wick operating means also serving to operate the flame extinguishing member.

A still further object of the invention is generally to improve this class of devices so as to increase their utility, durability, and efficiency.

Further objects and advantages will appear in the following description, it being understood that various changes in form, proportions, and minor details of construction may be resorted to within the scope of the appended claims.

For a full understanding of the invention and the merits thereof and also to acquire a knowledge of the details of construction and the means for effecting the result, reference is to be had to the following description and accompanying drawings, in which:

Figure 1 is a side elevation of an oil lamp provided with an extinguishing attachment constructed in accordance with my invention; Fig. 2 is a vertical sectional view taken on the line 2—2 of Fig. 1 and looking in the direction of the arrow; Fig. 3 is a vertical sectional view taken on the line 3—3 of Fig. 2 and looking in the direction of the arrow; Fig. 4 is an enlarged detail sectional view of the wick operating mechanism and its associated parts; Fig. 5 is a detail perspective view partly in section of the lower end of the extinguishing member, the wick operating rod being shown withdrawn from the bearing sleeve; Fig. 6 is a perspective view of the tubular extinguishing member detached.

Corresponding and like parts are referred to in the following description and indicated in all the views of the drawings by the same reference characters.

The improved extinguisher forming the subject matter of the present invention is principally designed for attachment to kerosene and other oil lamps, and by way of illustration is shown in connection with a lamp burner of the ordinary construction, in which 5 designates the hood, and 6 the wick tube. The device comprises a tubular flame extinguishing member 7 preferably stamped or otherwise formed from a single sheet of metal curved to conform to and adapted to embrace the upper portion of the wick tube 6.

The member 7 is provided with a lateral offset portion 8 defining a depending extension 9, the opposite longitudinal edges of which are provided with inwardly extending ears 10 adapted to loosely engage the adjacent walls of the wick tube 6, thereby to assist in guiding the member 7 when the latter is moved to operative and inoperative positions.

Journaled in suitable bearings in the top of the lamp is a sleeve 11 having a plurality of toothed wheels 12 rigidly secured thereto and adapted to pass through suitable openings in the tube 6 for engagement with the wick for the purpose of raising and lowering the latter. Secured to or formed integral with the sleeve 11 is a longitudinally disposed feather or spline 13, which latter projects within the sleeve 11 and extends from one end of said sleeve to the outer toothed wheel 12. Disposed within the sleeve 11 is an actuating member or shaft 14 having a longitudinal groove 15 formed therein for the reception of the key or feather 13, whereby when the member 14 is rotated a corresponding inward movement will be imparted to the toothed wheels 12 to effect adjustment of the wick. Disposed above and to one side

of the shaft 14, is a bar 16 having one end thereof bent downwardly and laterally to produce a horizontally disposed arm 17 terminating in an eye 18 in which is seated a tubular guiding member or sleeve 19. The sleeve 19 forms a bearing for the shaft 14 and also serves to support the outer end of said shaft when the latter is moved to extended or retracted position. Extending laterally from the inner end of the bar 16 is a pin 20 which enters a cam slot 21 formed in the extension 9 of the tubular member 7, whereby when an inward movement is imparted to the finger-piece 22 of the shaft 14, the pin 20 will engage the inclined walls of the slot 21 and move the tubular member 7 to operative position above the upper end of the wick tube 6, thereby to smother or extinguish the flame.

Attention is here called to the fact that the offset portion 8 of the tubular member serves to space the extension 9 from the adjacent side wall of the tube 6 so as to permit free movement of the bar 16 when the shaft 14 is actuated to extinguish the flame. It will be noted that by reason of the slot 15 in the shaft 14, the latter may be moved to extended or retracted position without rotating the sleeve 11. Thus it will be seen that by moving the shaft 14 in the direction of the arrow, indicated in Fig. 1 of the drawings, the tubular member will be elevated to a position above the top of the wick tube to extinguish the flame, and when the pressure on the finger-piece 22 is removed, the tubular member 7 will drop by gravity and in doing so automatically return the bar 16 and shaft 14 to normal position. In this connection it will be noted that the shaft 14 not only serves to effect the adjustment of the wick, but also serves to actuate the tubular member 7. By mounting the shaft 14 for longitudinal movement within the sleeve 11, the adjustment of the wick may be effected regardless of the position of the tubular member 7 relative to the wick.

The extinguishers may be made in different shapes and sizes according to the particular style of lamp burner upon which the same is used, and in some cases the longitudinally movable bar 16 may be shortened so as to come under the chimney support of the burner instead of extending laterally beyond the same.

Having thus described the invention, what is claimed as new is:

1. The combination with a lamp burner including a wick tube, of a flame extinguishing member slidably mounted on the wick tube and provided with a cam slot, and a longitudinally movable actuating member having a pin operating within the cam slot to effect the vertical adjustment of the flame extinguishing member.

2. The combination with a lamp burner including a wick tube, of a flame extinguishing member slidably mounted for vertical movement on the wick tube, an actuating member having a pin and slot connection with the flame extinguishing member and provided with a guide sleeve, and a wick raising device slidably mounted in the guide sleeve and adapted to bear against and operate the actuating member when a longitudinal movement is imparted to the wick raising device, said wick raising device being mounted for rotation in the sleeve and operable independently of the flame extinguishing member.

3. The combination with a lamp burner including a wick tube, of a tubular flame extinguishing member slidably mounted on the wick tube and provided with a lateral offset portion defining a depending extension having a cam slot formed therein, and an actuating member having a pin operating within the cam slot for moving the tubular member to operative position above the upper end of the wick tube.

4. The combination with a lamp burner including a wick tube, of a tubular flame extinguishing member having its upper portion curved to conform to and adapted to embrace the wick tube and its lower portion offset and provided with a cam slot, a longitudinally disposed bar having a pin adapted to engage the walls of the cam slot, and a wick operating shaft journaled on the bar, said shaft serving to actuate the bar to effect the vertical movement of the flame extinguishing member.

5. The combination with a lamp burner including a wick tube, of a flame extinguishing member slidably mounted on the wick tube, a wick operating shaft, and an actuating member having one end thereof operatively connected with the flame extinguishing member and its other end forming a support for the wick operating shaft.

6. The combination with a lamp burner including a wick tube, of a tubular member slidably mounted on said tube and having a cam slot formed therein, a longitudinally movable bar having a pin engaging the walls of the cam slot and provided with a laterally extending arm, a wick operating shaft journaled on the arm of the bar, and a finger-piece carried by the shaft and adapted to bear against and actuate the bar to effect the vertical adjustment of the flame extinguishing member.

7. The combination with a lamp burner including a wick tube, of a tubular flame extinguishing member slidably mounted on the wick tube, a sleeve journaled on the burner and provided with a wick engaging wheel, a key disposed within the sleeve, a shaft having a longitudinal groove for the reception of the key, and a bar having its

inner end operatively connected with the flame extinguishing member and its outer end provided with a journal for the shaft.

8. The combination with a lamp burner including a wick tube, of a flame extinguishing member slidably mounted on the wick tube and provided with an offset portion defining a depending extension, a longitudinally movable bar having its inner end interposed between the wick tube and extension and operatively connected with the latter, a sleeve provided with wick engaging members, and a shaft extending through the sleeve and journaled on the longitudinal movable bar, said shaft serving to rotate the sleeve to effect the vertical adjustment of the wick and also serving to actuate the bar to elevate the flame extinguishing member.

9. The combination with a lamp burner including a wick tube, of a flame extinguishing member having its upper end embracing the wick tube and its intermediate portion offset to form a depending extension spaced from the adjacent side of the wick tube, said extension being provided with a cam slot and having oppositely disposed ears arranged to embrace said wick tube, a sleeve journaled on the burner and provided with a wick engaging device, a bar having one end thereof interposed between the depending extension and wick tube and operating within the cam slot of said extension, an arm projecting laterally from the other end of the bar and provided with a bearing disposed in alinement with the sleeve, and a shaft journaled in said bearing and provided with means for engagement with the sleeve for rotating the latter to effect the vertical adjustment of the wick, said shaft also serving to actuate the bar to move the flame extinguishing member to operative position.

10. The combination with a lamp burner including a wick tube, of a flame extinguishing member slidably mounted on the wick tube and provided with a cam slot, an actuating member having a pin working in the cam slot and provided with a guide sleeve, and a wick operating rod slidably mounted in the sleeve and provided with a head adapted to bear against the sleeve and operate the actuating member when a longitudinal movement is imparted to the wick operating rod, said wick operating rod being mounted for rotation in the sleeve and operable independently of the actuating member.

In testimony whereof I affix my signature in presence of two witnesses.

FREAS H. CONNER. [L. S.]

Witnesses:
LEWIS B. HALL,
THOMAS J. BEALL.