G. H. WHITTINGHAM.

STARTER FOR ELECTRIC MOTORS.

APPLICATION FILED DEC. 10, 1914.

1,270,235.

Patented June 18, 1918.

3 SHEETS—SHEET 1.

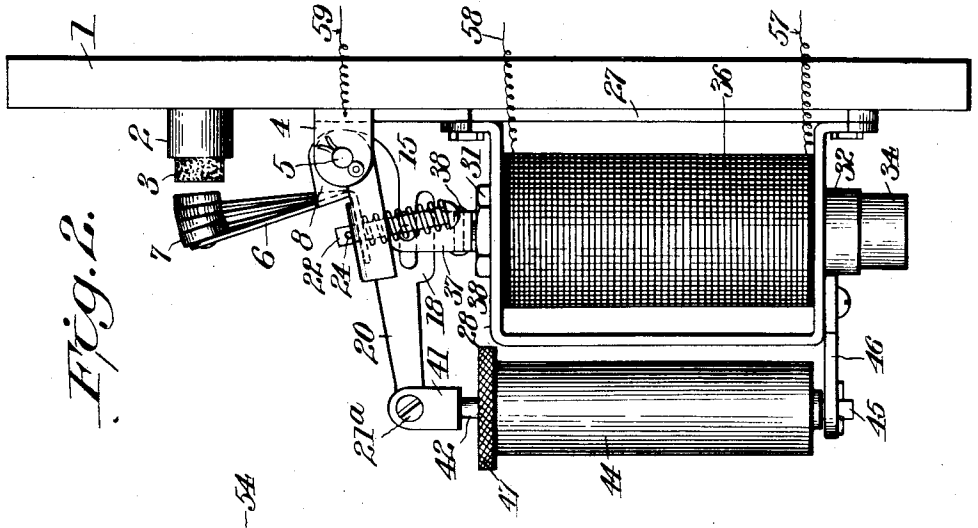

Fig. 2.

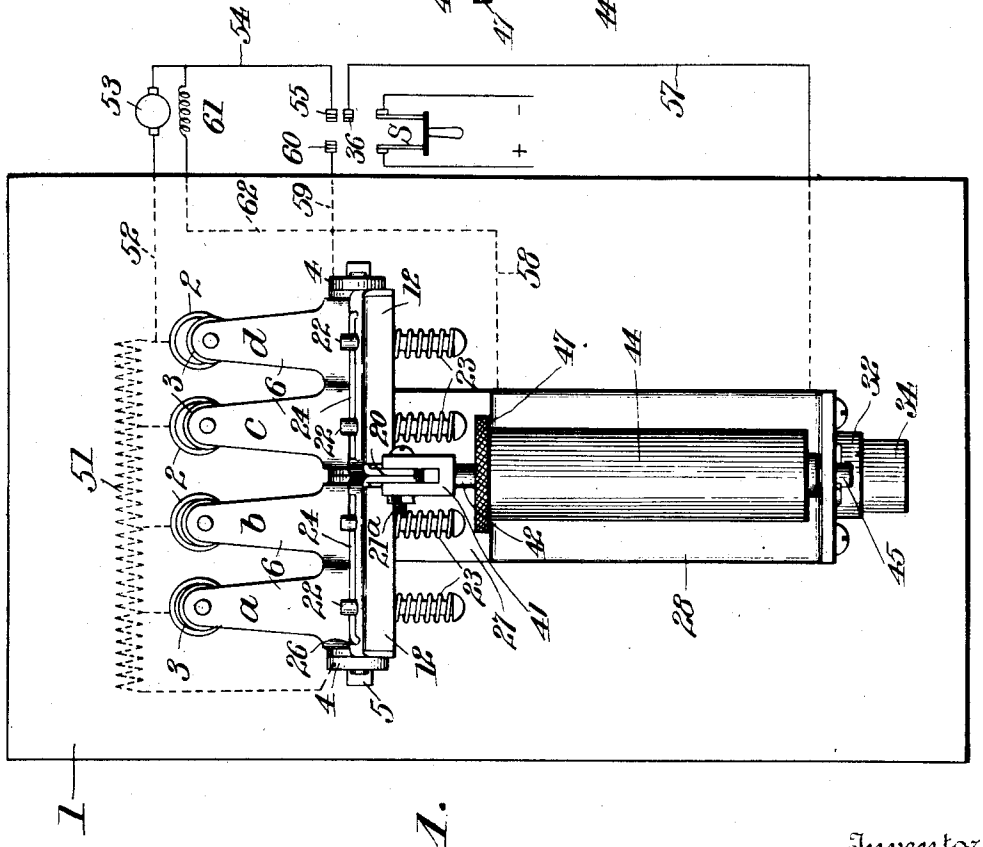

Fig. 1.

Witnesses
C. N. Walker.
A. D. Norris.

Inventor
G. H. Whittingham,
by
Watson & Boydell
Attorneys

G. H. WHITTINGHAM.

STARTER FOR ELECTRIC MOTORS.

APPLICATION FILED DEC. 10, 1914.

1,270,235.

Patented June 18, 1918.

3 SHEETS—SHEET 2.

Fig. 3.

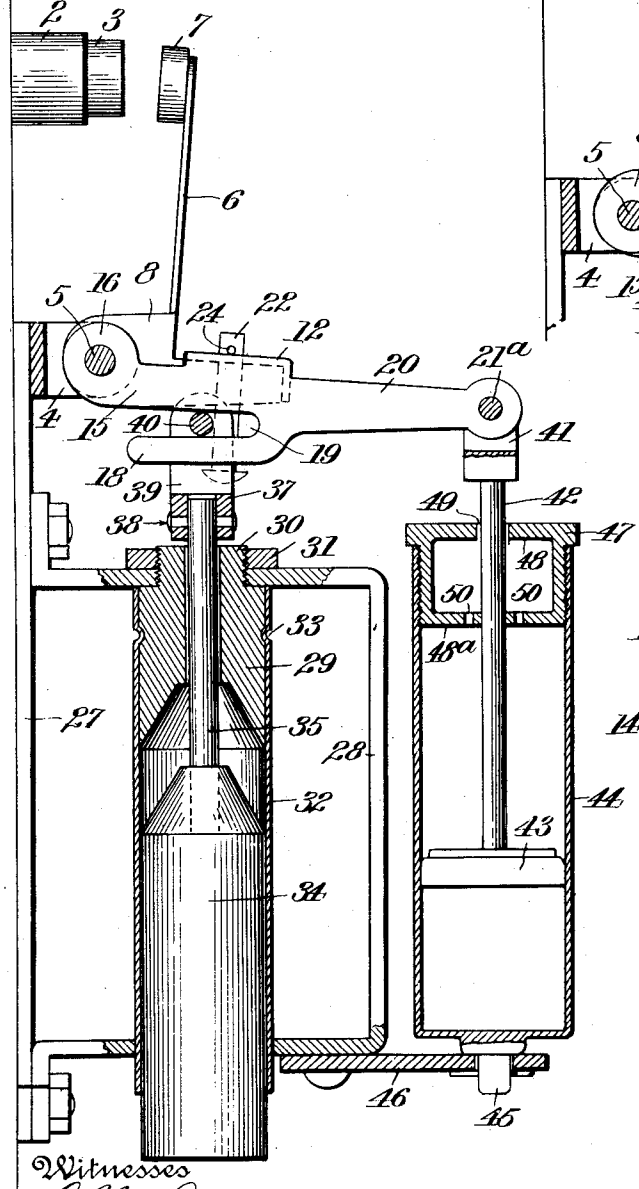

Fig. 4.

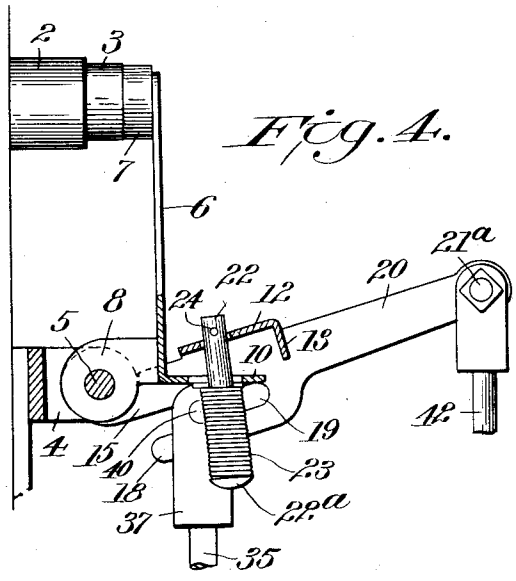

Fig. 5.

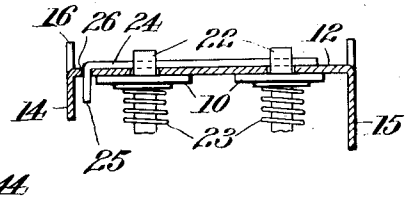

Witnesses

C. M. Walker.

A. D. Morris.

Inventor

G. H. Whittingham,

by

Watson & Boyden.

Attorneys.

G. H. WHITTINGHAM.

STARTER FOR ELECTRIC MOTORS.

APPLICATION FILED DEC. 10, 1914.

1,270,235.

Patented June 18, 1918.

3 SHEETS—SHEET 3.

Fig. 6.

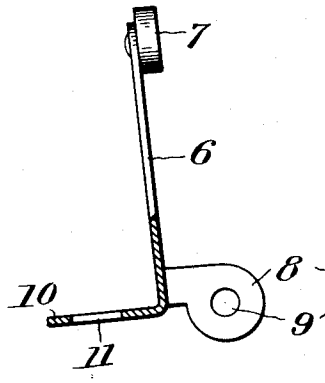

Fig. 7.

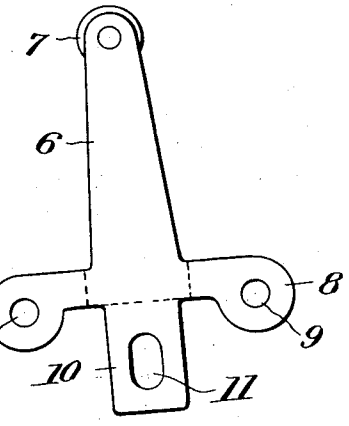

Fig. 9.

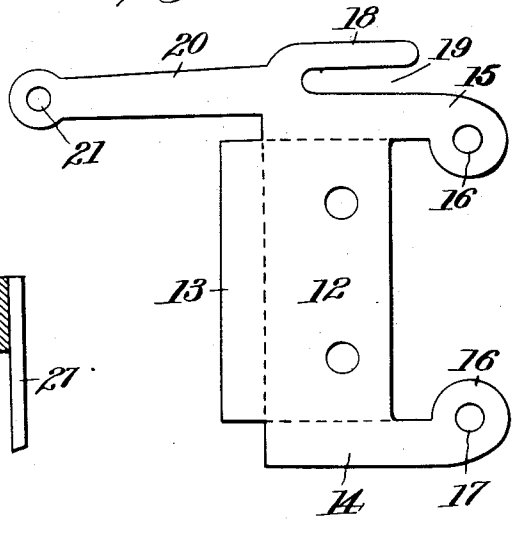

Fig. 8.

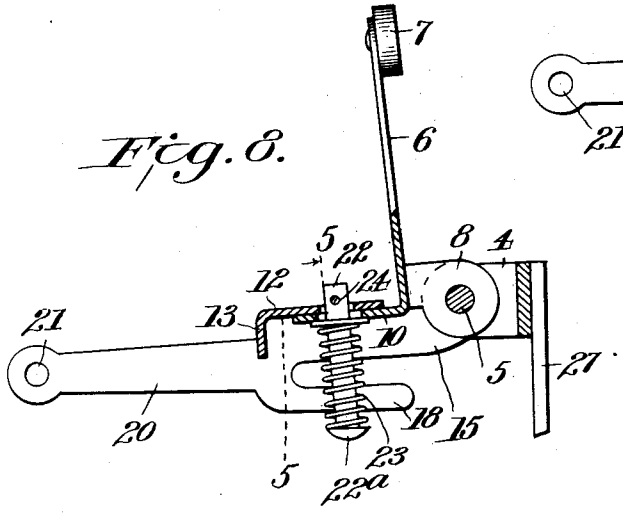

Witnesses:

E. M. Walker.

E. M. Jones

Inventor

G. H. Whittingham,

by

Watson & Boyden.

Attorneys

UNITED STATES PATENT OFFICE.

GEORGE H. WHITTINGHAM, OF PIKESVILLE, MARYLAND, ASSIGNOR TO MONITOR CONTROLLER COMPANY, OF BALTIMORE, MARYLAND, A CORPORATION OF MARYLAND.

STARTER FOR ELECTRIC MOTORS.

1,270,235. Specification of Letters Patent. Patented June 18, 1918.

Application filed December 10, 1914. Serial No. 876,601.

To all whom it may concern:

Be it known that I, GEORGE H. WHITTINGHAM, a citizen of the United States, residing at Pikesville, in the county of Baltimore and State of Maryland, have invented certain new and useful Improvements in Starters for Electric Motors, of which the following is a specification.

This invention relates to controlling apparatus for electric motors, and particularly to automatic starters for such motors.

More specifically, the present invention relates in some measure to features found in Patent No. 860,104, to O'Brien, dated July 16, 1907, and my own prior Patent No. 965,675, dated July 26, 1910, and consists of certain improvements in the construction and arrangement of the parts of such devices.

The objects of the invention are to provide a time-controlled starter of this character which shall be simple in construction, convenient in arrangement, cheap to manufacture, and efficient and positive in operation. To this end the parts are so designed that they may be readily pressed up from sheet metal, and easily assembled, the construction being such that a form-wound coil for the actuating solenoid may be employed. The invention further contemplates an improved dash-pot, whereby certain advantages in operation are attained.

In order that the invention may be readily understood, reference is had to the accompanying drawings, forming part of this specification, and in which,

Figure 1 is a front elevation of my improved starting device, the circuit connections being diagrammatically indicated;

Fig. 2 is a side elevation of the device shown in Fig. 1;

Fig. 3 is a central, vertical section on enlarged scale of the complete device as it appears when in idle position, parts being in elevation, and the solenoid coil being omitted for the sake of clearness;

Fig. 4 is a fragmentary vertical section on a plane different from that of Fig. 3, and showing the parts in their operative position;

Fig. 5 is a fragmentary transverse section substantially on the line 5—5 of Fig. 8, parts being in elevation;

Fig. 6 is a side elevation, partly in section, of one of my improved contact fingers;

Fig. 7 is a plan view of the blank from which the finger is formed;

Fig. 8 is a fragmentary vertical section somewhat similar to Fig. 4, but showing the parts in normal or inoperative position; and,

Fig. 9 is a plan view of the blank from which my improved contact finger actuating frame is formed.

Referring to the drawings in detail, 1 designates a suitable base, of slate or the like, upon which the parts of the device are mounted. Secured to the upper side of this base is a series of fixed contacts, each comprising a metal socket 2 in which a button of carbon 3 is set, in a well known manner.

Secured to the base 1, below the fixed contacts, is a frame or bracket 4 in which a shaft 5 is supported. It will be understood that the device is vertically arranged, as shown in the drawings, and that this shaft is substantially horizontal.

Mounted for free rotation upon this shaft are the contact fingers, four of which are shown in the drawings, and are designated by the letters *a*, *b*, *c*, and *d*. Referring more particularly to Figs. 6 and 7, it will be seen that each of these fingers is formed from a sheet metal blank and comprises a body portion 6, to one end of which is secured a contact button 7, and at the other end of which are formed the spaced pivot lugs 8, provided with alined openings 9, through which the shaft 5 passes. Extending at an angle to the body portion 6, at a point between the pivot lugs, is a tail piece 10, provided with an elongated opening or slot 11.

The actuating means for the contact fingers consists of a swinging frame designated in its entirety by the reference numeral 12. This frame consists of two sections, each of which may be conveniently formed from a sheet metal blank of the shape shown in Fig. 9. Each section comprises a body portion preferably rectangular in outline, having a stiffening flange 13 along one side, and the flanges 14 and 15 at its ends. These flanges are, of course, bent up at right an-

gles to the body portion, as indicated by dotted lines in Fig. 9, and as clearly shown in Fig. 8. The end flanges 14 and 15 terminate in pivot lugs or bearings 16, having alined openings 17 through which the shaft 5 freely passes.

Extending parallel with the flange 15 is an arm 18, spaced from such flange to form an open-ended slot 19, for a purpose hereinafter described. Also formed integral with the flange 15 is an arm 20, having at its outer end an opening 21, through which a pivot pin passes, as will hereinafter appear.

It will be understood that the two sections, such as shown in Fig. 9, are formed right and left so that when assembled upon the shaft 5, the two arms 20 will lie side by side, as clearly shown in Fig. 1, so as to constitute but a single lever.

In order that the swinging frame just described may actuate the contact fingers, and at the same time, have a movement independent of such fingers, a resilient connection is provided between such parts. The method of forming such a connection constitutes one of the important features of the present invention.

The body portion of the swinging frame is provided with a series of openings, one for each finger, and through these openings extend the ends of headed rods 22. Referring to Fig. 8, it will be seen that the tail piece 10 of each finger lies under and normally in contact with the body portion 12 of the swinging frame, the slot 11 in such tail piece being in alinement with the corresponding opening in the frame. Each rod 22, therefore, passes loosely through both the opening in the frame 12 and the slot 11 in the tail piece of the contact finger. A coil spring 23 surrounds each rod and bears at one end against the head 22^a thereof, and at the other against a washer which rests upon the tail piece 10. Thus, the tail pieces are held in contact with the under side of the frame, as shown in Fig. 8, by means of the springs 23.

The rods 22 are themselves supported, preferably in pairs, by means of a transverse pin 24 which rests upon the upper surface of the frame 12, as more particularly shown in Figs. 1 and 5. This pin is disposed parallel with the shaft 5, and in order to maintain the pin in position, I provide it with a portion 25, bent at right angles thereto, and projecting downwardly through a hole 26 in the frame 12. When it is desired to remove any rod 22, the pin 24 may be disengaged from the frame 12 by pushing upwardly upon the rods 22, thereby compressing the springs 23, whereupon, the pin 24 may be withdrawn.

It will be understood that while the tail pieces 10 of the contact fingers extend at substantially right angles to the body portion thereof, yet each tail piece is set at a slightly different angle from that of the others. The result of this is that the contact fingers are normally held at progressively increasing distances from the fixed contacts 3, whereby, upon movement of the frame, the fingers are successively brought into engagement with their respective contacts, in a manner well understood in the art.

From the foregoing, it will therefore be apparent that the fingers are each independently and freely supported upon the shaft 5, and are adapted to be actuated by means of the swinging frame 12, through the agency of the rods 22 and springs 23. Fig. 3 shows the parts in their normal or idle position. When the actuating lever 20 is raised, as shown in Fig. 4, the contact fingers 6 are successively brought into engagement with the contacts 3 and the springs 23 then are placed under compression as the frame 12 continues its movement, this resulting in a separation of the frame and tail piece 10, as clearly shown in Fig. 4. In other words, the fingers and frame are each independently mounted upon the shaft 5 and are yieldingly connected by means of the springs 23.

The above described arrangement of contact fingers freely mounted upon a shaft supported by a base, and the provision of a resilient connection between such fingers and a swinging actuating device, is substantially similar to the construction covered by the O'Brien Patent No. 860,104, heretofore mentioned, the present invention, however, embodying certain improved details of construction, as will be obvious.

It will be observed that when the frame is swung upon its pivot, as shown in Fig. 4, the rods 22 likewise swing about the pins 24, thus permitting a smooth, easy movement, and preventing binding or cramping. In other words, the rods 22 are pivotally supported on the frame 12 on an axis parallel with the shaft 5.

The actuating device for the frame and fingers consists of a solenoid of improved construction, which will now be described. I provide a frame of iron or other magnetic material, substantially rectangular in shape, and which preferably consists of a plate 27, secured to the base 1, and a yoke 28, bolted or otherwise secured thereto. This frame is provided with alined openings in its top and bottom walls, the upper opening being smaller than the lower. A core member 29 is provided with a reduced portion 30 extending through the upper or smaller opening, and rigidly secured therein by means of a lock nut 31. A tube 32 of non-magnetic material, such as brass, is permanently attached to the core member 29 in any suitable way, as, for example, by spinning a portion

of the tube into an annular groove formed in the core member, as indicated at 33 in Fig. 3. The upper end of this tube abuts against the under surface of the top member of the frame 28, while its lower end extends through the opening in the lower member of such frame. A movable core member or plunger 34 fits loosely within the lower part of the tube 32, and is provided with a rod 35, which extends up through a central bore in the core member 29. The upper end of the rod 35 is attached, as by means of a rivet 38, to a coupling head 37, provided with a slot 39 adapted to embrace the lever arm 18. A pin 40 passes through the upper end of the coupling head 37, and works freely in the open slots 19. A suitable coil 36 of insulated wire surrounds the tube 32 and lies within the frame 28. It will, of course, be understood that when the coil is energized, the core 34 is drawn up, thus raising the pin 40 and forcing the frame 12 to swing upwardly about the shaft 5, thus operating the contact fingers 6. The meeting ends of the core members 29 and 34 are preferably formed with complementary conical surfaces, as is usual.

In order to retard the movement of the solenoid plunger and associated parts, I employ a dash-pot arranged substantially as in my prior Patent No. 965,675, above mentioned. This dash-pot comprises the usual cylinder 44, supported by means of a lug 45 on a bracket 46, secured to the magnet frame 28. In the cylinder works the usual valved piston 43, carried by a piston rod 42, connected at its upper end to a coupling head 41, pivotally connected by means of a bolt 21^a to the lever 20.

To avoid the wasting of oil, which usually occurs in connection with dash-pots of this character, I have designed a special cap 47 for closing the open end of the cylinder. This cap is hollow and is provided with an outer wall 48 and an inner wall 48^a. The inner wall has a central opening snugly fitting the piston rod 42 and serving as a guide for such rod, while the outer wall 48 is provided with an alined opening 49 of such size as to clear the piston rod. The inner wall is furthermore provided with one or more small openings 50. In operation, any oil which tends to follow the rod 42 out of the cylinder upon its upward stroke is caught in the cup-like cap and finds its way back into the cylinder through the preforations 50. Owing to the fact that a clearance is provided between the edge of the opening 49 and the piston rod 42, no oil is scraped from the rod by the upper wall 48 of the cap, such wall merely serving as a guard to prevent the entrance of dust and dirt to the inside of the cap. The openings 50 also permit the escape of air from the cylinder as the piston moves, thereby preventing any oil which may collect around the piston rod from being blown out through the guide opening in the inner wall of the cap. By this arrangement, oil is prevented from collecting on the outer wall of the cap, and hence, consequent creeping of oil over the outside of the dash-pot and associated parts is in large measure eliminated.

It will be noted that the head 37 is of such size as to be capable of passing through the small opening in the magnet frame 28, through which the neck 30 extends. To assemble the parts, therefore, the coil 36, which may be form-wound, is first placed in position in the frame 28, and then the tube 32, core members 29 and 34, and coupling head 37 are inserted through the opening in the lower end of the magnet frame, and pushed upwardly through the coil. The parts are then secured in position by means of the lock nut 31. After this has been done, the contact fingers and swinging frame are properly placed on the bracket 4 and the shaft 5 slipped through the alined openings therein, the slot 19 engaging over the pin 40. The bolt 21^a, connecting the frame with the dash-pot, may then be inserted. Moreover, should it be desired to remove the contact fingers or swinging frame for any purpose, the shaft 5 is withdrawn, whereupon, by taking out the bolt 21^a, the slot 19 may be disengaged from the pin 40. It will thus be seen that the solenoid core and associated parts are removable as a unit from the magnet frame, and that the swinging frame and contact fingers are also removable as a unit, such units being easily disengaged by virtue of the open slot 19.

Referring to Fig. 1, it will be understood that suitable resistance coils 51 are connected with the fixed contacts 3 in any desired manner, and from one end of such resistance coils extends a wire 52 to the armature 53 of the motor to be controlled. From the other side of such motor extends a wire 54 to one contact 55 of a knife switch S, connected with the line circuit in the usual manner. From the other contact 60 of such switch extends a wire 59 to the bracket 4, thus completing the motor circuit. One side of the solenoid winding 36 is connected by the wire 58 with the wire 59 and contact 60, while the other side is connected by a wire 57 with an auxiliary contact 56.

It will be apparent, therefore, that upon closing the switch S, the solenoid is immediately energized, thus swinging the frame 12 about the shaft 5, and with it the fingers 6, such fingers, as they engage their respective contacts, successively cutting out sections of the resistance 51 and finally connecting the armature directly to the switch contact 60. The usual shunt field 61 of the

motor may be conveniently connected at one end to the wire 54, and at the other end by means of a wire 62 to the wire 59, whereby full line voltage is applied to such field as soon as the switch S is closed.

From the foregoing, it will be seen that I have provided an automatic starter possessing many novel features as regards simplicity of construction and ease and efficiency of operation, and it is thought that the numerous advantages of the device will be readily appreciated by those skilled in the art without further discussion.

What I claim is:

1. In an automatic starter for electric motors, a shaft, a plurality of contact fingers pivotally mounted on said shaft, a swinging frame also pivotally mounted on said shaft, a resilient connection between said swinging frame and each of said contact fingers, and means for swinging said frame about said shaft.

2. In an automatic starter for electric motors, a shaft, a plurality of contact fingers pivotally mounted on said shaft, a swinging frame also pivotally mounted on said shaft, a plurality of springs carried by said frame, each of said contact fingers having a portion engaged by one of said springs, and means for swinging said frame about said shaft.

3. In an automatic starter for electric motors, a pivotally mounted contact finger having an offset end and a slot in said end, a swinging frame for actuating the finger having a part overlapping said offset end, a rod pivotally suspended from said overlapping part of said frame and extending through the slot in the finger, a spring surrounding said rod and adapted to press the overlapping parts of the finger and frame toward one another, and means for swinging said frame about its axis.

4. In a device of the class described, the combination of two members pivotally mounted on a common axis, and having overlapping portions, a rod passing freely through such portions and loosely connecting them, and a transverse pin extending through one end of said rod and resting on one of said members, said rod being capable of rocking on said pin, said pin having its end bent over, and one of said members having an opening into which said bent over end fits.

5. In a device of the class described, a supporting shaft, a plurality of contact fingers pivotally mounted thereon, each of said fingers comprising a body portion, bearing lugs through which said shaft passes, and a tail piece extending at an angle to said body portion, and an actuating device for said fingers comprisig a frame adapted to engage said tail piece.

6. In a device of the class described, a plurality of pivotally mounted contact fingers, and an actuating device therefor, said device consisting of a frame formed in two sections, each section comprising a body portion, and an arm portion, said last mention portions, when the device is assembled, lying side by side to form a single lever, and electromagnetic means for moving said lever.

7. In a device of the class described, the combination with a plurality of contact fingers, of an actuator adapted to engage the same, said actuator comprising a swinging frame, a shaft on which said frame is pivotally mounted, said frame having a lever provided with an open-ended slot opening toward said shaft, and a solenoid provided with a plunger having a pin adapted to work in said slot, whereby said frame and plunger may be readily disconnected when said shaft is removed.

8. In a device of the class described, the combination with a vertical support, of a swinging frame pivotally secured at one end thereto, a dash-pot connected with the other end of said frame, a solenoid carried by said support below said frame and having a plunger engaging said frame intermediate its ends, a series of contact fingers pivotally mounted on said support and extending above said frame, and an operative connection between said fingers and said frame.

9. In an automatic starter for electric motors, a shaft, a plurality of contact fingers pivotally mounted on said shaft, a swinging frame independent of said shaft, said frame being mounted to swing about the same axis as said fingers, a resilient connection between said swinging frame and each of said contact fingers, and means for swinging said frame.

In testimony whereof I have affixed my signature, in presence of two witnesses.

GEORGE H. WHITTINGHAM.

Witnesses:

JOS. H. BLACKWOOD,

J. HANSON BOYDEN.