July 7, 1959 A. L. COULTER 2,893,419

HAND-CHOKE CONVERSION UNIT

Filed May 3, 1957

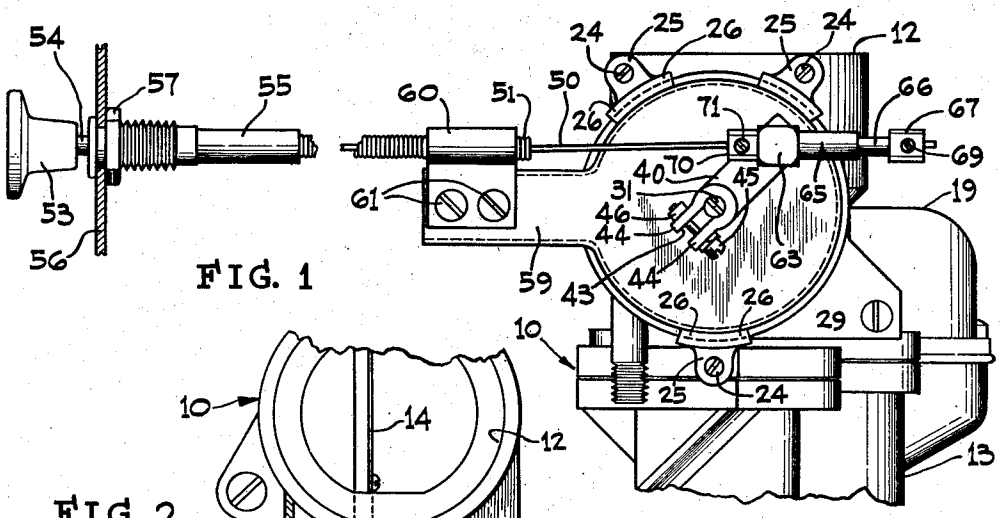

FIG. 1

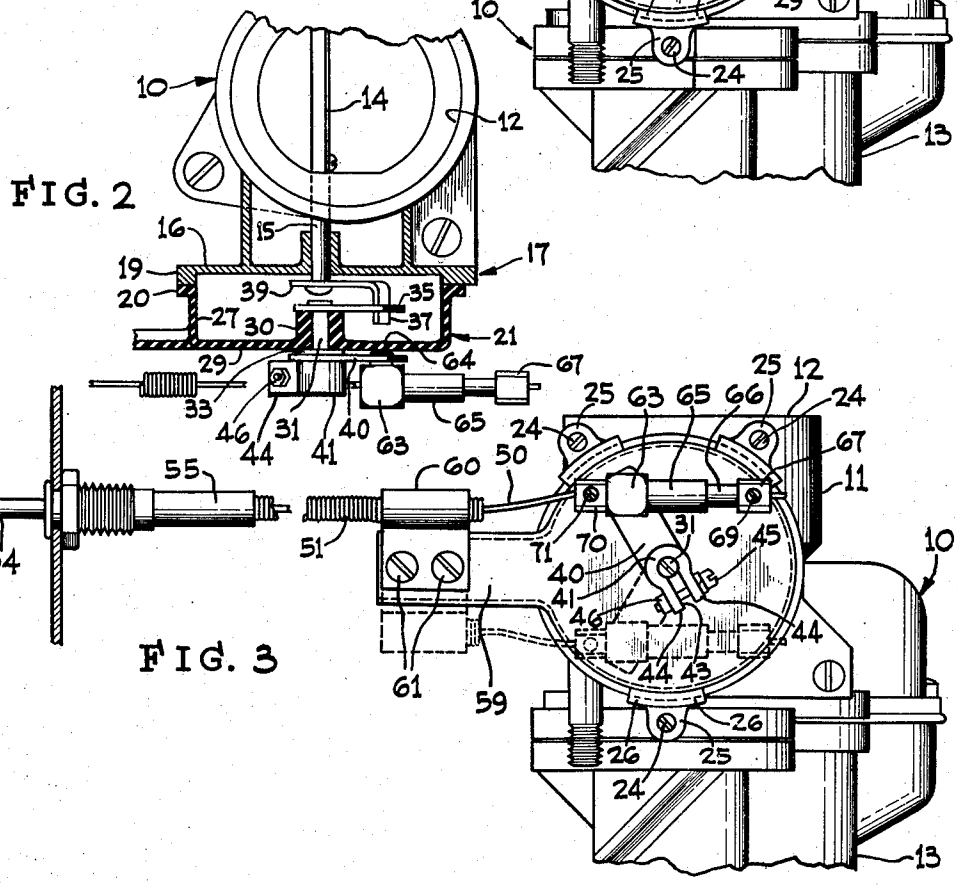

FIG. 2

FIG. 3

INVENTOR.
ALBERT L. COULTER

BY Hill, Sherman, Meroni, Gross & Simpson

ATTORNEYS

United States Patent Office

2,893,419

Patented July 7, 1959

2,893,419

HAND-CHOKE CONVERSION UNIT

Albert L. Coulter, Chicago, Ill.

Application May 3, 1957, Serial No. 656,855

2 Claims. (Cl. 137—270)

This invention relates to improvements in adapters for the chokes of carburetors and more particularly relates to an improved form of adapter replacing the thermostatic automatic choke control for a carburetor, and accommodating the choke to be manually controlled.

Heretofore, manual adapters for the automatic chokes of carburetors have been provided for replacing the thermostatic automatic choke and for accommodating the operation of the butterfly choke valve by hand from the dashboard of the car.

While such adapters have been successful, the automatic choke may be on one side or the other of the carburetor, depending upon the manufacture of the carburetor and the choke crank arm may extend above or below the axis of the butterfly valve depending upon the type of carburetor. This has made it necessary to design special adapters for the many makes of carburetors. Another disadvantage of the prior adapters has been that they inherently result in a hissing noise due to the leakage of air into the air passageway of the carburetor, which has made such adapters highly objectionable.

A principal object of the present invention is to provide a manual choke adapter, adapted for manually controlling the chokes of a wide variety of carburetors.

Another object of the invention is to provide an adapter unit for converting an automatic thermostatically controlled choke to a manually controlled choke, and so constructed and arranged as to eliminate the hissing heretofore present with the prior art forms of adapters.

A still further object of the invention is to provide a manually operated choke mechanism which can be mounted on either the right or left hand side of the carburetor for operating the butterfly valve in instances where the choke crank arm may extend either above or below the pivotal axis of the butterfly valve.

A still further object of the invention is to provide a manually operated choke mechanism which can be substituted for the automatic choke mechanism for a wide variety of carburetors, taking the place of the casing of the automatically operated choke mechanism and adapted for either the right or left hand side of the carburetor without alteration of the choke mechanism or the drilling or holes or other work on the carburetor, and in which the operating means for the choke crank arm is readily adaptable for connection to the crank arm where the crank arm is on either the right or left hand side of the carburetor or extends either above or below the center of pivotal movement of the butterfly choke valve.

These and other objects of the invention will appear from time to time as the following specification proceeds and with reference to the accompanying drawing wherein:

Figure 1 is a fragmentary view in side elevation of a portion of a carburetor, with a manual choke mechanism

constructed in accordance with the invention attached thereto;

Figure 2 is a fragmentary plan view of the carburetor shown in Figure 1, showing the choke mechanism in horizontal section; and

Figure 3 is a view somewhat similar to Figure 1 and showing the choke mechanism in position to move the choke valve into its closed position, to choke or enrich the fuel supply to the engine during starting and warming of the engine.

In the embodiment of the invention illustrated in the drawing, I have shown a carburetor **10** including a body **11** having an air intake **12**, a central fuel mixing portion **13** and a fuel outlet (not shown) leading from the bottom of said fuel mixing portion and adapted to be connected with the intake of an internal combustion engine.

The air inlet **12** is controlled by a butterfly valve **14**, mounted on a pivotal actuating valve shaft **15**, journalled in the body **11** of the carburetor and extending outwardly therefrom through an end plate **16** within a housing **17** extending outwardly from the body **11**.

The housing **17** may be the housing for the usual thermostatically controlled automatic choke and has an annular wall **19** extending outwardly from the end plate **16** abutted by a flange **20** of a cap **21**, and closing the outer end of said plate and the mechanism for pivoting the valve shaft **15**.

As herein shown, the plate **16** and annular wall **19** have spaced lugs extending outwardly therefrom. Said lugs for different makes of carburetors are never uniformly spaced, and in order to enable the cap **21** to be universally adapted to most forms of carburetors, I provide metal clips **25** having fingers **26** engaging the flange **20**, and retained in engagement therewith by machine screws **24** extending through said clips and threaded in said lugs, to positively retain the cap or housing **21** to the plate **16**.

The cap **21** has a closed outer wall **29** having a generally cylindrical wall **27** extending inwardly therefrom and terminating in the flange **20**. A boss **30** extends inwardly from the wall **29** and forms a bearing support for a pivot shaft **31**.

The cap **21** may be made from a well known form of thermoplastic material such as butyrate, Bakelite, a nylon thermoplastic or various other forms of vinyl resins, polystyrenes, polyamides, and acrylic resins. It is, of course, obvious that the casing need not necessarily be molded from a thermoplastic material but also may be cast or fabricated from metal.

The pivot shaft **31** has a collar **33** formed integrally therewith, abutting the outer face of the closure wall **29**, and has a lever arm **35** abutting the inner end of the boss **30** extending from the inner end of the pivot shaft **31** and riveted or otherwise secured thereto. The lever arm **35** has a slotted outer end portion (not shown) through which extends an ear **37**, projecting from the end of a choke crank arm **39**, riveted or otherwise secured to the end of the valve shaft **15**, for pivoting said valve shaft upon pivotal movement of the lever arm **35**.

The shaft **31** is freely mounted in the boss **30** to enable the lever arm **35** to be extended above or below the center of said shaft, for connection with the choke crank arm **39** in instances where said choke crank arm may extend either above or below the axis of the butterfly shaft **15**.

A crank arm **40** is mounted on the outer end of the

shaft 31, for pivoting said shaft and moving the butterfly valve 13 into its open or into its closed choked position. The crank arm 40 is shown as having a boss 41 on the inner end thereof mounted on the shaft 31. The boss 41 of the crank arm 40 is shown as being slotted from the outer side thereof, as indicated by reference character 43 and as having parallel spaced lugs 44 extending therefrom, the inner margins of which define the slot 43. As herein shown, a machine screw 44 extends through the lugs 44. A nut 46 threaded on said machine screw, exerts pressure against an opposite lug 44 to restrict the slot 43 and fixedly secure the crank arm 40 to the shaft 41. The outer end of the shaft 31 is slotted, to accommodate adjustment of said shaft and the position of the lever arm 35, as by screwdriver or like device.

The crank arm 40 may be operated from the dashboard of the automotive vehicle by a Bowden wire 50, slidably carried in a cable housing 51, and operated by the usual knob 53 on the end of a plunger 54, guided in a tubular guide 55 secured to the dashboard 56 as by nut 57. The plunger 54 is suitably connected to the Bowden wire 50 for moving said Bowden wire within the housing 51 upon operation of the knob 53.

The end plate 29 of the casing 21 has an arm 59 extending horizontally therefrom having a bracket 60 holding the inner end of the housing 51 in position to position the Bowden wire 50 to operate the crank arm 40. The bracket 60 is secured to the arm 59 as by machine screws 61 threaded within the arm 59, at substantially the center thereof, to accommodate the positioning of the bracket 60 to extend either above or below the arm 59, depending upon the position of the crank arm 40.

The free end of the Bowden wire 50 slidably extends through a block 63 pivoted to the free end of the crank arm 40 as by a pivot pin 64, and having a guide sleeve 65 extending horizontally therefrom. A sleeve 66 is slidably mounted within the guide sleeve 65 and is spring biased in outwardly extended relation with respect to the sleeve 65 and abuts a stop 67 secured to the end portion of the Bowden wire 50 as by a set screw 69. A similar stop 70 is secured to the Bowden wire 50 by set screw 71. As the stop 70 abuts the opposite side of the block 63 from the stop 67 to pivot the crank arm 40 in a clockwise direction to open the valve 13, the knob 53 is pushed inwardly along the sleeve 55. In a contrary manner, upon pulling of the knob 53, the stop 67 engaging the sleeve 66 will move the crank arm 40 in a clockwise direction and close the valve 13 to choke the engine.

It should here be understood that the drive connection from the Bowden wire 50 to the crank arm 40 is of a well known form commonly used with hand chokes to accommodate opening of the valve 13 against the bias of the sleeve 66 when excessive vacuums are generated in the intake manifold.

It may be seen from the foregoing that a simple and improved form of choke adapter for carburetors of automotive vehicles has been provided, which is so constructed and arranged as to be universally applicable to the carburetors of most automotive vehicles, and that the adapter provides an enclosure for the operating mechanism for the butterfly valve in the space normally containing the automatic choke mechanism.

It may further be seen that the choke adapter is so arranged that it may readily be mounted on either the right or left hand side of the carburetor depending upon whether the automatic choke is on either the right or left hand side of the carburetor, and that the crank arm 40 and lever arm 35 may be positioned either above center of the valve shaft 15 as indicated by solid lines in Figures 1 and 3 or below the center of said valve shaft as indicated by dotted lines in Figure 3, with no modifications of the choke adapter, the Bowden wire housing bracket 63 being positionable to extend either above or below the arm 59 in accordance with the position of the crank arm 40.

It may also be seen that the choke adapter of the invention encloses the end of the butterfly valve shaft 15 and thereby prevents the entrance of air along said shaft and the hissing heretofore present with choke adapters and also provides a solid and relatively large bearing support for the parts operating the butterfly valve.

While I have herein shown one form in which my invention may be embodied, it will be understood that various modifications and variations of the invention may be effected without departing from the spirit and scope of the novel concepts thereof.

I claim as my invention:

1. In a carburetor, a body, an air intake leading along said body, a valve shaft pivoted in said body and extending across said air intake and having a butterfly valve mounted thereon, controlling the flow of air through said intake, a choke crank arm on the outer end of said valve shaft, and means adapting said choke crank arm for manual operation comprising a housing enclosing said choke crank arm and the end of said valve shaft, a pivot shaft freely journalled in said housing and having a lever arm secured to the inner end thereof having operative engagement with said choke crank arm, a crank adjustably secured to the outer end of said pivot shaft, the connection from said crank to said pivot shaft being adjustable to accommodate said crank and lever arm to extend above or below the center of said shaft in accordance with the position of said choke crank arm, a Bowden wire operatively connected with said crank for pivoting said crank in a direction to open and close said butterfly valve, a flexible housing enclosing said Bowden wire, a support bracket for said flexible housing on said housing enclosing said choke crank arm, the mounting for said support bracket comprising a support arm extending radially from the wall of the first mentioned housing and adapted to be positioned horizontally thereof and so constructed and arranged as to accommodate mounting of said support bracket on said arm to extend above or below said arm and maintain said flexible housing and Bowden wire in substantial alignment with the end of said crank regardless of whether said crank is positioned to extend above or below the axis of said pivot shaft to conform to said choke crank arm.

2. In a carburetor, a body, an air intake leading downwardly along said body, a pivoted valve shaft journalled in said body and extending across said air intake, a butterfly valve on said valve shaft controlling the flow of air through said air intake, a choke crank arm secured to said shaft, and means for adapting said choke crank arm for manual operation comprising a housing on the outside of said body and containing said shaft and said choke crank arm, said housing having a cylindrical wall having a flange extending above the inner end thereof, an end wall closing the outer end of said cylindrical wall, a shaft extending through said end wall and mounted thereon for free rotation with respect thereto about an axis coaxial with the axis of said first mentioned shaft, a lever arm secured to the inner end of said second mentioned shaft and having interengagement with said choke crank arm, for pivoting said choke crank arm upon pivotal movement of said lever arm, a crank arm on the outer end of said second mentioned shaft, on the outside of said housing, means adjustably securing said crank arm to said shaft and accommodating adjustment of said shaft and lever arm to conform to the position of said choke crank arm when positioned to extend above or below the axes of said shafts, a Bowden wire having connection with said crank arm for operating said crank arm and choke crank arm, a flexible housing for said Bowden wire, a support bracket for said flexible housing for supporting said flexible hous-

ing on said housing in substantial alignment with the free end of said crank, and means supporting said bracket on said housing and accommodating said bracket to extend above or below the axis of said shaft to support said flexible housing in substantial alignment with the end of said crank arm when said choke crank arm is positioned to extend above or below the axis of said shafts and comprising a support arm extending radially

from the end wall of said first mentioned housing and adapted to be positioned horizontally thereof, and means securing said support bracket to said arm.

References Cited in the file of this patent

UNITED STATES PATENTS

2,737,825	Plockelman	Mar. 13, 1956
2,753,148	Oetiker	July 3, 1956