C. Messenger,

Clothes Wringer,

No. 34,639. Patented Mar. 11, 1862.

Fig. 2

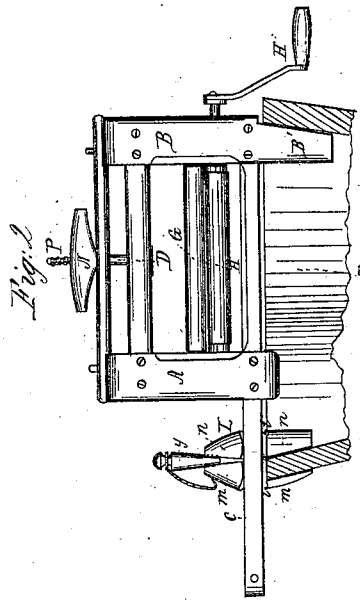

Fig. 4

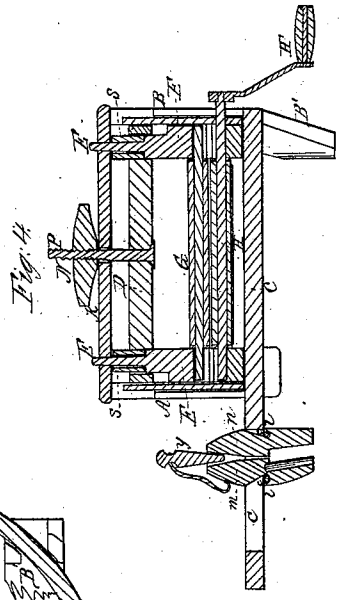

Fig. 5

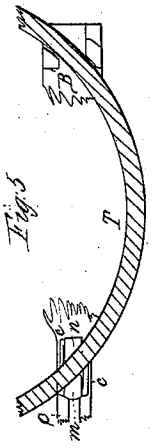

Fig. 1

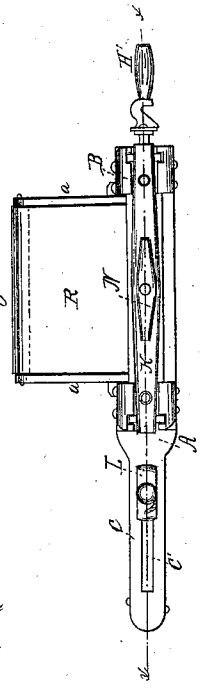

Fig. 3

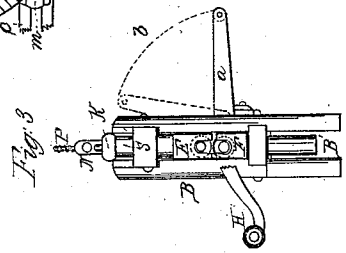

Witnesses:
R. A. Baldwin
Leffrank Palen

Inventor:
Charles Messenger

N. PETERS, PHOTO-LITHOGRAPHER, WASHINGTON, D. C.

UNITED STATES PATENT OFFICE.

CHARLES MESSENGER, OF WARREN, OHIO.

IMPROVED CLOTHES-WRINGER.

Specification forming part of Letters Patent No. **34,639**, dated March 11, 1862.

To all whom it may concern:

Be it known that I, CHARLES MESSENGER, of Warren, in the county of Trumbull and State of Ohio, have invented certain new and useful Improvements in Clothes-Wringers; and I do hereby declare that the folowing is a full and complete description of the construction and operation of the same, reference being had to the accompanying drawings, making a part of this specification, in which—

Figure 1 is a top view. Fig. 2 is a side view. Fig. 3 is an end view. Fig. 4 is a vertical section in the direction of the lines *x x* in Fig. 1. Fig. 5 represents the clutches and a section of the tub inverted.

Similar letters of reference indicate corresponding parts in the different views.

A and B are standards formed each of two separate pieces secured to the cross-bars C and D, the lower end of the standard B forming a clutch B′. In each of these standards are boxes E and F, in which the ends of the elastic rollers G and H revolve. The upper part of the boxes E, form stems E′, that pass through the springs S and the ends of the cross-bar K. In the middle of this cross-bar is the screw P, secured to the cross-piece D, on which is the nut N, and by turning this nut the distance between the rollers can be increased or diminished, for as the nut is screwed down the ends of the cross-bar K press on the springs S, which lowers the box E, and by unscrewing the nut it is elevated. The cross-bar K can pass down between the pieces forming the standards.

R, Fig. 1, is an endless apron passing over the under roller H, and over another roller, (indicated in Fig. 1,) which is supported by the arms *a a*. This roller can be adjusted to any desirable inclination, as indicated by the dotted lines *b* in Fig. 3. It is designed to convey the clothes away from between the rollers.

The rollers are turned by the crank H′, secured to the end of the shaft of the under roller H, the roller G being turned by friction.

The wringer is fastened to the edge of the tub, as shown in Figs. 2 and 5. The clutch B′ at one end consists of the two pieces forming the standard B, cut out so as to suit the curve of the tub.

L is an adjustable clutch in the cross-piece C, that can be moved along in the slot C′ to suit the size of the tub. *m* and *n* are fingers forming this clutch, projecting over the slot C′, so as not to fall through, and they are kept together in place by a link *c*, surrounding them in the catch *l* under the piece C, as shown in Figs. 2 and 4. These fingers are so arranged that by putting in the pin *y* at the top between the fingers, as represented, the lower ends are pressed on the tub T, in this way holding the wringer firmly in place.

By the peculiar arrangement of this wringer, the rollers being adjustable, any bulk of clothes can be passed through between them, and when pressed dry are carried away on the apron R, and by means of the movable clutch L the wringer can be firmly secured to any sized tub.

What I claim as my improvement, and desire to secure by Letters Patent, is—

The special arrangement of the adjustable clutch L, clutch B′, springs S, cross-bar K, adjusting-screw P, in combination with the adjustable endless apron R, and rollers G and H when operating conjointly, in the manner and for the purpose set forth.

CHARLES MESSENGER.

Witnesses:
JEFFERSON PALM,
R. A. BALDWIN.