Sept. 19, 1967 E. M. WILSON 3,342,094

MUSICAL INSTRUMENT KEYBOARD

Filed Nov. 4, 1966

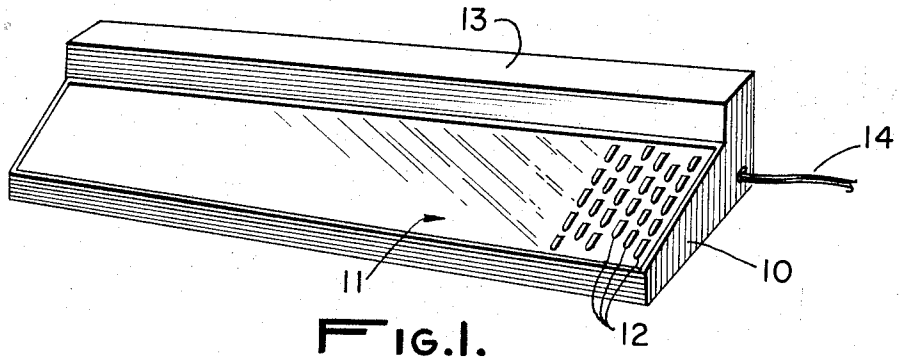

FIG. 1.

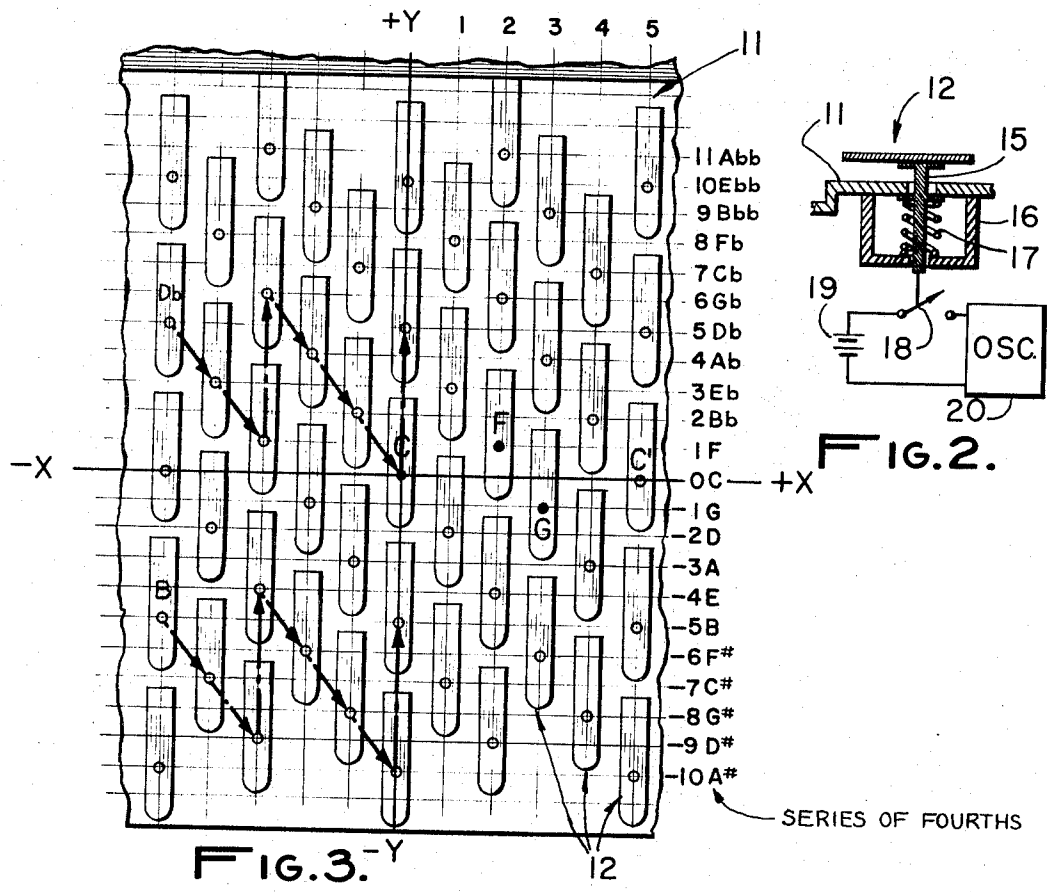

FIG. 3.

FIG. 2.

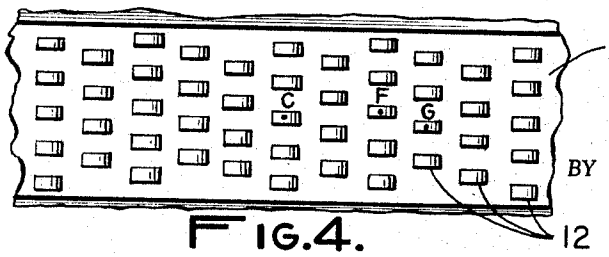

FIG. 4.

INVENTOR.
ERVIN M. WILSON

BY

Elliott & Pastoriza
ATTORNEYS

United States Patent Office 3,342,094
Patented Sept. 19, 1967

3,342,094

MUSICAL INSTRUMENT KEYBOARD

Ervin M. Wilson, 1219 Poinsettia St.,
Los Angeles, Calif. 90046

Filed Nov. 4, 1966, Ser. No. 592,174
6 Claims. (Cl. 84—423)

This invention relates generally to musical instruments and more particularly to a novel musical instrument keyboard particularly suited to electrically operated instruments.

Conventional keyboards for instruments such as pianos, accordions, organs, and the like are generally made up of a progression of white and black keys or digitals inter-related to define sets of twelve diatonic tones for each octave. For example, a piano or accordian keyboard will usually include, in each octave, seven white keys and five black keys, two of the black keys being grouped to define D♭ and E♭ and three of the black keys being grouped to define G♭, A♭ and B♭. For purposes of the present discussion, only the twelve diatonic notes in the conventional octave will be considered and in this respect, it will be understood that C♯ corresponds to D♭, D♯ to E♭, F♯ to G♭, G♯ to A♭, and A♯ to B♭.

The manual keyboard as described above, may be employed to actuate suitable hammers through a mechanical link mechanism to strike strings as in a piano or alternatively, they may simply function to close valve parts, operate reeds, or close suitable switches and thus effect connections between suitable tone generators and an output speaker system. The manner in which a tone is generated from the striking or hitting of an individual key forms no part of the present invention.

With the manual constructed as described above, many disadvantages result. First, the keyboard in general is difficult to play. There are two reasons for this. First, the distance between notes defining octaves requires undue stretching of a person's fingers and is particularly difficult for a person with small hands. The situation is aggravated with respect to tenth chords, often played with the left hand. Second, the physical layout of the keys also renders it difficult to finger properly. In this respect, the positions of the various keys do not correspond or adapt themselves as well as might be the case for the natural relaxed position of a player's fingers.

Another problem with manuals of the foregoing type resides in the difficulty involved, particularly for a beginner, in transposing a tune to a different key from the one in which the tune was learned. For example, if a tune is learned in the key of C and it is desired to play the tune in the key of B♭ or F, the fingering is different and new fingering must be learned. In other words, there is no consistency or homogeneity in the fingering operation when playing in a different key.

Finally, conventional type keyboards as discussed above are not adaptable to extending a tuning series beyond a twelve tone limit. As a consequence, keyboards are relatively restricted in practice to essentially one tuning.

With the above considerations in mind, it is a primary object of the present invention to provide a new musical instrument keyboard which is geometrically and tonally constructed such as to overcome the foregoing disadvantages.

More particularly, it is an object to facilitate the playing of an instrument by designing a keyboard in which first, the pitch span of a single hand is vastly increased such that octaves, tenths, and the like are easily played by a musician even with physically small hands; and second, the position of the various keys of the keyboard is such that they will fall under the more natural physiological positions of a player's fingers when his fingers

and hands are in a relaxed position. In other words, the keys are positioned in a manner particularly well adapted to the human hand and fingers.

Another important object is to provide a musical instrument keyboard in which the placement and fingering of the fingers on the keys is identical when transposing a tune from one key to a different key. In other words, there is a homogeneity in the fingering of the keyboard for all of the different keys in which a tune might be played.

Still another object is to provide a keyboard so designed that it is readily adaptable to any tuning system that can be defined as a series of Fourths; for example, systems of twelve, seventeen and twenty-two tones.

Briefly, these and many other objects and advantages of this invention are attained by providing a keyboard having a plurality of keys together with suitable key responsive means for enabling the generation of tones individual to the respective keys. In accord with a first feature of the invention, the keys are arranged on the board in a plurality of parallel columns staggered with respect to each other such that relative to an X–Y rectangular coordinate system in which the Y axis coincides with one of the columns and one key in that column corresponds to the origin, the remaining keys in the column from the origin fall on every fifth Y coordinate. In addition, successive integral X coordinates from the origin correspond to the intersections of the columns with the X axis. The second key from the origin in an X direction is positioned one Y coordinate from the X axis and the third key from the origin in the same X direction; that is, the key that is three successive X coordinates to one side of the Y axis, is positioned one Y coordinate of opposite sign from the X axis.

The foregoing positioning of the second and third keys in an X direction relative to the X–Y coordinate system serves to define the entire keyboard. Thus the positions of the remaining keys are found by simply translating the entire coordinate system so that each of the remaining keys assumes a position at the origin and the second and third key coordinate positions are defined as explained for the first mentioned second and third key coordinate positions.

In accord with a second important feature of the invention by which the various objects are realized, the second key from the origin positioned one Y coordinate from the X axis generates a tone constituting a Fourth interval relative to the tone generated by the key at the origin and the third key positioned one Y coordinate of opposite sign from the X axis generates a tone constituting a Fifth interval relative to the tone generated by the key at the origin. This tonal relationship remains the same regardless of which particular key constitutes the origin of the X–Y coordinate system. Therefore, the fingering for playing a tune in any particular key is identical to the fingering for playing the same tune in any other key.

By tilting the entire plane of the X–Y coordinate system with respect to an horizontal plane, the keys closer to a player when in position to play, are positioned generally lower than the keys further from the player in a manner somewhat similar to a typewriter so that the positions of the keys conform more naturally to that of the relaxed position of the player's fingers.

A better understanding of the invention as well as various further features and advantages thereof will be had by now referring to one embodiment as illustrated in the accompanying drawings, in which:

FIGURE 1 is a perspective view of the musical instrument keyboard of this invention as might be employed in an electrical musical instrument;

FIGURE 2 is a schematic, fragmentary cross-section illustrating one means of generating a tone of given pitch

upon operation of a particular key on the keyboard illustrated in FIGURE 1;

FIGURE 3 is an enlarged fragmentary view of a portion of the keyboard of FIGURE 1 related to an X–Y coordinate system in order to facilitate the description and explanation of the geometrical and tonal properties of the keyboard; and,

FIGURE 4 is a fragmentary front elevational view of the keyboard as illustrated in FIGURE 3 looking generally along the Y—Y axis.

Referring first to FIGURE 1 there is shown a musical instrument **10** having a keyboard **11** including a plurality of keys or digitals **12**. Only a few of the digitals are shown, it being understood that the board **11** is normally covered with keys following the same pattern as illustrated at the right. The instrument **10** may house in its rear portion **13** suitable electrical oscillators adapted to be triggered or connected to an output tone generating system as by an electrical output lead **14** upon operation of one or more of the keys **12**. It is to be understood that the showing in FIGURE 1 is purely diagrammatic and that the keyboard may be adapted to any known type of musical instrument wherein a given tone is generated in response to digital operation of a given digital or key. The present invention resides solely in the geometrical and tonal relationships of the several keys **12** on the keyboard **11**.

For the particular embodiment illustrated in FIGURE 1, the operation of the keys serves to generate a tone by means of an electrical oscillator or equivalent circuit element. For example, there is illustrated in FIGURE 2 in diagrammatic form one simple means for causing the generation of a tone in response to actuation of the key or digital. Thus, each of the keys **12** may be provided with a suitable guiding stem **15** passing through the keyboard **11** and lower portion of a cage structure **16** housing a return spring **17** normally holding the key **12** in a raised position. The lower end of the stem **15** is coupled to a suitable switch such as indicated at **18** for closing a circuit between a source of electrical energy, such as a battery **19**, and a tone generating means, such as an oscillator **20**, upon depression of the key **12**. It will be understood by those skilled in the art that there is associated a particular tone for each particular key or digital and in this respect, there will be normally as many tone generators or oscillators as there are keys. In addition, the oscillators may be arranged to be continuously in operation and the keys merely employed to close switches to complete a circuit between the output of the particular oscillator associated with the key and a transducing loud speaker system.

It being understood that a desired tone may be provided for each of the keys with an individual pitch depending upon which key is actuated, reference is now had to FIGURE 3 which illustrates, as described, a fragmentary portion of the keyboard of FIGURE 1.

To facilitate defining the physical or geometrical relationship of the various keys as well as their tonal relationship, there is illustrated in FIGURE 3 an X–Y rectangular coordinate system wherein, merely by way of example, the origin corresponds with the digital or key defining the note middle C.

The arrangement of the keys in FIGURE 3 fall into a series of parallel columns, one column of which corresponds with the Y—Y axis as shown. The other columns to the right of the Y—Y axis are numbered **1**, **2**, **3**, **4**, and **5**, and define successive X coordinates at their intersections with the X axis. The Y coordinate points are defined at the right and numbered **1** through **11** in an upward positive direction and **—1** through **—10** in a negative downward direction as viewed in FIGURE 3.

Referring once again to the center column including the key defining middle C at the origin of the X–Y coordinates, it will be evident that successive notes in this column in both an upward and downward direction fall on every fifth Y coordinate; for example, the notes C♯ and D and the notes B and A♯.

The second note from the origin along the direction of the X axis has a position one positive Y coordinate above the X axis and is indicated at F and corresponds to the note F. The tone generated by this note constitutes a Fourth interval relative to the tone generated by the origin key or middle C note. The third note measured from the origin along the X axis in the same direction is positioned one Y coordinate of opposite sign from the X axis as indicated at G and corresponds to the musical note G. This key thus generates a tone constituting a Fifth interval with respect to the tone generated by the key at the origin defining the note middle C.

Treating the foregoing differently, the keyboard in the particular embodiment shown is defined by physically positioning the key generating the Fouth interval, at the second positive X coordinate and the first positive Y coordinate, and the key generating the Fifth interval at the third positive X coordinate point and at the first negative Y coordinate. It should be understood that if the Y axis is simply inverted so that —Y appears at the top and +Y at the bottom, the key F would be positioned two X coordinates to the right and one +Y coordinate point down and the key G would be positioned three X coordinates to the right and one —Y coordinate point upwardly.

From the relative positions of the other notes, it will be evident that these positions may readily be defined by simply translating the X–Y coordinate system such that each of the remaining keys assumes a position at the origin of the X–Y coordinate system and then defining the positions of the second and third keys along the X axis to the right of the origin in the same manner as the keys F and G were defined relative to the key C as illustrated in FIGURE 3. It will be also understood that these second and third keys generate tones constituting Fourths and Fifths, respectively.

With the keys geometrically positioned as described above, it will be clear that every fifth key along the X axis lies on the X axis and the tonal arrangement is such that the interval between the various fifth keys along the X axis defines one octave. Thus, the key designated C' in FIGURE 3 is located at the fifth coordinate point along the X axis to the right, and this key is spaced tonally exactly one octave from the key at the origin at C. It will be clear that there are only four intermediate rows of keys between the octaves so that an octave may readily be fingered with one hand and without undue stretching.

In accordance with a further feature of this invention, the plane of the X–Y coordinate system is tilted with respect to the horizontal, the actual top surfaces of the keys, however, remaining horizontal. As a result, the various keys will appear in elevation as illustrated in FIGURE 4, and it will be noted in this respect that the keys C, F, and G assume a similar relative relationship to that shown in the view of FIGURE 3. With the individual keys in positions such as defined by FIGURES 3 and 4, they will more nearly correspond to the relaxed finger positions of a player when he is seated in front of the keyboard with the lower keys in elevation closer to him and the higher keys in elevation further from him.

From the foregoing description, it will be evident that transposing to a different key will in no way alter the fingering for playing a particular tune in that different key. As a specific example, in playing a scale in the key of B, the sequence or path followed by the player's fingers is indicated by the solid connected arrows in FIGURE 3, the successive notes being B, C♯, D♯, E, F♯, G♯, A♯, B. If now this scale is played in the key of D♭, the sequence or path followed by the player's finger is indicated by the dashed arrows, the successive notes being D♭, E♭, F, G♭, A♭, B♭, C, D♭. It will be evident in FIGURE 3, that the solid arrow and dashed arrow patterns are geometrically identical, and thus the fingering is the same.

This foregoing desirable result is a consequence of the geometrical formation of the keyboard as by permitting each of the various keys to constitute the origin of the coordinate system and then defining the physical positions of the keys defining the Fourth interval and Fifth interval relative to the origin as having coordinate points two X coordinates to the right and one Y coordinate point downwardly.

An inherent consequence of this design is that the keyboard is adaptable to any tuning system that can be defined as a series of Fourths. Thus, while the embodiment described is a twelve tone system, the keyboard may be extended to systems beyond a twelve tone limit.

From the foregoing description, it will thus be evident that the present invention has provided a novel musical instrument keyboard wherein all of the various objects set forth are fully realized.

What is claimed is:

1. A musical instrument keyboard including: a plurality of keys; and key responsive means for enabling the generation of tones individual to said keys, respectively, said keys being arranged in a plurality of parallel columns staggered with respect to each other such that relative to an X–Y rectangular coordinate system in which the Y axis coincides with one of said columns and one key in said one column corresponds to the origin, the remaining keys in said column from the origin fall on every fifth Y coordinate, and successive integral X coordinates from said origin define the intersections of said columns with the X axis, the second key from the origin in an X direction being positioned one Y coordinate from the X axis and the third key from the origin in the same X direction being positioned one Y coordinate of opposite sign from the X axis.

2. An instrument according to claim **1**, in which the coordinate positions of the remaining keys on said keyboard are defined by translating said coordinate system to successive positions in which each key coincides with the origin, and in each position defining the coordinate position of the second and third key in the X direction from the key at the origin in the same manner as said first-mentioned second and third key coordinate positions are defined.

3. An instrument according to claim **2**, in which the second key from the origin of said rectangular coordinate system in any one of said successive positions generates a tone constituting a Fourth interval relative to the tone generated by the key at said origin, and the third key generates a tone constituting a Fifth interval relative to the tone generated by the key at the origin.

4. An instrument according to claim **3**, in which every fifth key from the origin in an X direction falls on the X axis and generates a tone constituting an octave interval from the tone generated by the preceding fifth key.

5. An instrument according to claim **4**, in which the plane of said X–Y coordinate system is titled relative to an horizontal plane such that the various keys closer to a player in the Y direction are at a lower elevation than keys further from the player whereby the keys are positioned to correspond more naturally to the relaxed positions of a player's fingers.

6. An instrument according to claim **5**, in which the second key is in a positive X direction from the origin and is displaced one positive Y coordinate point in a direction away from the player and the third key is in the same positive X direction and is displaced one negative Y coordinate point in a direction toward the player.

No references cited.

RICHARD B. WILKINSON, *Primary Examiner.*

C. M. OVERBEY, *Assistant Examiner.*