March 2, 1965 H. BAUMER 3,171,991

ELECTROMAGNETICALLY ACTUATED TUNING FORK DRIVE ADAPTED FOR CLOCKWORK

Filed Dec. 18, 1962

Fig.1

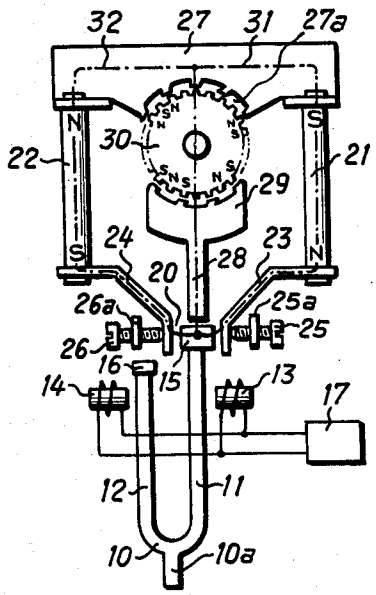

Fig.2

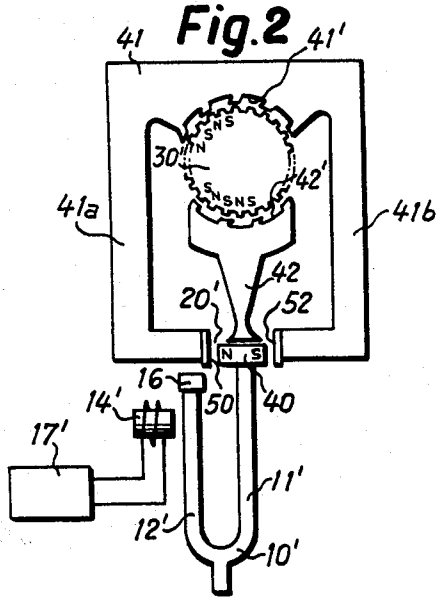

INVENTOR.
HERBERT BAUMER

BY McGlew and Toren
ATTORNEYS

United States Patent Office

3,171,991

Patented Mar. 2, 1965

3,171,991

ELECTROMAGNETICALLY ACTUATED TUNING FORK DRIVE ADAPTED FOR CLOCKWORK

Herbert Baumer, Schlossmulestrasse 11,
Frauenfeld, Switzerland

Filed Dec. 18, 1962, Ser. No. 245,506
Claims priority, application Switzerland, Jan. 8, 1962, 153/62
13 Claims. (Cl. 310—21)

This invention relates in general to electrically operated clocks, and in particular to a new and useful electric clock operating mechanism which includes an oscillating element which is electrically excited and vibrates at a constant characteristic frequency to influence a magnetic circuit to thereby convert the oscillatory movement into an accurately timed rotary movement to drive a clock mechanism.

In known clocks of the kind which include an electromagnetically excited tuning fork as the oscillating control member, the oscillation of the fork is converted into rotary movement by means of a spring and pawl mechanism which is secured to one of the prongs of the fork. For example, a pawl is arranged to engage in the teeth of a pawl wheel and upon each deflection of the tuning fork prong the pawl wheel is arranged to rotate a driving wheel by one tooth displacement. Since by its very nature the deflection of the tuning fork prong is very small, an extremely fine tooth division has to be effected on the pawl wheel and the teeth of the rotary wheel which is driven thereby. In order to reduce wear of the operating parts, the materials with which the operating parts are made must be very hard, such as semi-precious stone, for example, a ruby. This, in turn, results in very great requirements in respect to the precision of manufacture and adjustment of the elements and their initial expense. In addition, the oscillation amplitude has to be maintained within certain limits upon electrical excitement. This is usually accomplished either by mechanical limit stops or by electrical switching measures. It is necessary to keep the oscillation amplitude of the tuning fork within certain limits in order to make sure that upon each deflection only a single tooth will be advanced by the engagement of the pawl with the rotary wheel. All of these measures thus require a very costly arrangement when the rotary movement is generated by a mechanical drive transmission, and if reliable functioning of the clock is to be assured.

In accordance with the present invention, there is provided a magnetic circuit for generating the rotation of a rotary drive member of the clockworks. The magnetic circuit is varied in accordance with the oscillation of a tuning fork having one prong arranged in the air gap of the magnetic circuit. The arrangement is such that the magnetic circuit is changed as the tuning fork prong portion is vibrated and each change causes a rotary movement of the driving rotar wheel of the clock mechanism.

In accordance with one embodiment, a pole piece is arranged at a spaced location around a portion of a rotary driving wheel for the clockwork mechanism. The driving wheel or rotor includes circumferentially spaced alternate North and South pole piece elements. The stationary pole piece or stator advantageously includes permanent magnet elements which are oriented with their poles disposed in an opposite manner and arranged to engage each side of the pole piece and extend alongside each side of the rotor. The stator includes portions which are separated to define an air gap in which one prong of an oscillatable tuning fork is positioned. Known electric means are provided for oscillating the tuning fork at its natural vibration frequency. The fork carries at its

outer end a body of a magnetically conductive material which, during the oscillation of the prong, is shifted backwardly and forwardly in the air gap in order to influence the polarity produced by the permanent magnets of the stator arranged on each side of the stationary pole piece. The changes of the magnetization of the stator produced by the oscillation of the prong of the tuning fork is such that it will cause an advancing of the rotary wheel with the circumferentially spaced magnetic pole pieces by one pole piece during each oscillation.

In accordance with modifications of the invention, the tuning fork may be excited by causing oscillation of either one or both fork members by an electric magnet. In an alternate arrangement, the stationary pole piece or stator may be magnetized by the movement of a magnet which is arranged in the air gap of the pole piece instead of having the pole piece include the permanent magnets aligned in opposite directions as in the other embodiment.

Accordingly, it is an object of this invention to provide an improved electrical driving mechanism for a clock.

A further object of the invention is to provide an improved clockwork mechanism which includes a tuning fork member which is oscillated by electrical means and which influences a magnetic circuit for rotating a driving wheel member.

A further object of the invention is to provide an improved clockwork mechanism which includes a rotary driving wheel for driving the operating mechanisms of the clockwork and which has circumferential pole pieces of alternately different polarity spaced around the periphery thereof and is rotated under the influence of a magnetic circuit having an air gap in which a tuning fork prong element is oscillatable and wherein the polarity of the magnetic circuit is changed in accordance with the oscillations of the tuning fork element in the air gap of the magnetic circuit.

A further object of the invention is to provide a clockwork mechanism which includes a tuning fork which is oscillated under electrical driving power and which is arranged in an air gap of a magnetic circuit defined by a stator having permanent magnets on opposite sides which are arranged in opposite polarity orientation and which include pole pieces which surround portions of a rotary driving wheel having circumferentially spaced magnetic pole pieces of alternately different polarity, and wherein the oscillations of the tuning fork member in the air gap influence the magnetic circuit to rotate the rotary driving wheel.

A further object of the invention is to provide a clockwork mechanism which includes a rotary driving wheel having pole pieces defined at spaced locations around the circumference thereof of alternate polarity and which driving wheel is rotated by the influence of surrounding pole piece elements, the polarity of which is varied in accordance with the shifting of a magnet carried by a prong of a tuning fork which is oscillated by electrical exciting means.

A further object of the invention is to provide a clockwork which is simple in design, rugged in construction and economical to manufacture.

The various features of novelty which characterize the invention are pointed out with particularity in the claims annexed to and forming a part of this specification. For a better understanding of the invention, its operating advantages and specific objects attained by its use, reference should be had to the accompanying drawings and descriptive matter in which there are illustrated and described preferred embodiments of the invention.

In the drawings:

FIG. 1 is a somewhat schematic illustration of a driving

mechanism for a clockwork constructed in accordance with the invention; and

FIG. 2 is a view similar to FIG. 1 of another embodiment of the invention.

Referring to the drawings in particular, as indicated in FIG. 1, the invention embodied therein includes a tuning fork **10** which constitutes a mechanical oscillating element for driving clockwork. The tuning fork **10** has a constant vibrating frequency characteristic and this vibration determines the working of the clock and the maintenance of the accurate timing thereof. The tuning fork **10** includes two arms or prongs **11** and **12** and a central base **10***a* which is mounted by fixed mounting means (not shown).

In the embodiment of FIG. 1, each of the arms **11** and **12** is oscillated under the influence of electromagnets **13** and **14** arranged at respective outer sides thereof. The electromagnets **13** and **14** are excited electrically under the influence of an electrical exciter circuit indicated **17**. The exciter circuit **17** advantageously comprises any suitable switching device, for example, a battery-fed transistor which is well known in the art and has not been illustrated in detail for this reason.

In the embodiment of FIG. 1, the outer end of the arm **11** is provided with a body **15** of magnetically conductive material, for example, soft iron. The body is arranged in the air gap defined by spaced stirrup members **23** and **24** which are constructed as a yoke and which include outer end portions which are connected to respective ends of permanent magnets **21** and **22**, respectively. A body **16** which is arranged at the end of the prong or arm **12** of the tuning fork **10** is provided with a mass **16** which serves merely as an equalization mass in order to tune both prongs to the same characteristic oscillation frequency.

In accordance with the invention as indicated in FIG. 1, a magnetic circuit is provided which is defined by permanent magnets **22** and **21** arranged in a permanent manner with the poles thereof arranged in opposite directions and which are connected to respective ends of the yokes **24** and **23**. A web **28** with a curved pole piece **29** is arranged centrally above the air gap **20** between the yoke elements **23** and **24** and the curved pole piece **29** includes a face which surrounds a portion of a rotary driving wheel generally designated **30**.

The rotary driving wheel **30** is advantageously arranged to drive the operating mechanism of the clock. The wheel **30** includes circumferentially spaced pole pieces which are of alternate polarity, as indicated by the letters N and S of the drawing. The remaining portion of the magnetic circuit is defined by a stationary pole piece **27** constructed in the form of a yoke which joins the respective ends of the magnets **21** and **22** and which includes a curved pole face **27***a* which is arranged to face the opposite side of the driving wheel **30** from the pole piece **29**. Means such as threaded bolt members **25** and **26** are provided for adusting the air gap **20** between the yoke members **23** and **24**. The bolts **25** and **26** are threaded into stationary elements **25***a* and **26***a*, respectively, and they may be threaded to cause the outer ends thereof to bear against the ends of the yoke elements **23** and **24**, respectively.

The pole piece **27** with the magnet **21** and the yoke member **23** and the web **28** define a first magnetic circuit generally designated **31**, which has a common center line with a second magnetic circuit generally designated **32**, defined by the web **28**, the pole piece **27**, the magnet **21** and the yoke **24**. The body **15** is in the center line of each of these magnetic circuits and a shifting of this body by the oscillation of the tuning fork **10** causes a change in the magnetic characteristics of each magnetic circuit and produces a rotary movement of the rotary driving wheel **30**. Both of these circuits are polarized to equal strength but in opposite directions by the permanent magnets **21** and **22**.

In the rest or center position of the body **15** in which the air gap **20** is of equal size on both sides, the stator poles are magnetically neutral. However, when the prong **11** is oscillated toward the right, for example, as indicated in FIG. 1, the air gap is diminished to the right while it is increased toward the left. Thereby, the magnetic resistance in the first magnetic circuit **31** is decreased and the magnetic resistance in the second magnetic circuit **32** is increased. For this reason, the polarity produced by the magnets **21** and **22** at the pole piece **27** will be a South pole, while the pole piece **29** will be a North pole. Upon the next deflection of the body **15** toward the left, the reverse conditions take place and the poles **27** and **29** change their polarities corresponding to the reversed polarities of the magnets **21** and **22**. This phenomenon is repeated periodically in rhythm with the oscillation of the tuning fork **10**.

The rotor or driving wheel **30** is permanently magnetized at the circumference in the orderly divisions with the changing polarities, as indicated in FIG. 1. In the embodiment shown, the rotor is advantageously provided with two projections which form the circumferentially spaced pole pieces. The construction compares with that which is known, per se, in small synchronous motors. The operation is such that upon each change of polarity of the stator pole due to the oscillations of the body **15** on the tuning fork prong **11**, the rotor advances about one pole division. The rotation of the rotor **30** is thus positively controlled by the deflections of the tuning fork **10** and the drive of the clock mechanism therefore is performed exactly synchronous to such oscillations. In FIG. 2, a modified arrangement is indicated which includes a tuning fork **10′** having a prong **12′** which carries a body **16** and which is oscillated under the influence of an electromagnet **14′** controlled by an electrical exciting circuit **17′**. In this embodiment, the stator comprises a substantially U-shaped outer jacket or stator **41** having an inwardly extending curved pole piece portion **41′** and which includes legs **41***a* and **41***b* which have inwardly projecting portions which terminate in pole faces **50** and **52** which are spaced to define an air gap **20′**. A central web member **42** includes a curved pole piece **42′** which is arranged in opposition to the curved pole piece **41′** and spaced therefrom to provide access for the rotor or driving wheel **30′**.

In this embodiment, a prong **11′** of the fork **10′** carries a permanent magnet **40** at its outer end which is oriented in the air gap **20′** with the North pole facing the pole face **50** and the South pole facing the pole face **52** of the jacket or stator **41**. The shifting of the magnet **40** under the oscillation of the prong **11′** causes the magnetic polarization of the stator **41** in a manner similar to the embodiment of FIG. 1. In the center position of the oscillating prong **11′** and of the magnet **40**, the stator poles are magnetically neutral. If the magnet **40** is swung toward the right, then the South pole will approach the right-hand face **52** and reduce the air gap therebetween and the North pole will approach the web **42** and the air gap will be reduced therebetween. At such an instance, the pole piece **41′** will be the South pole and the pole piece **42′** will be the North pole. Upon a deflection in the opposite direction to the left, the reverse condition takes place and the two stator poles will assume the reverse polarity. With this constant changing of the polarity of the stator pole faces **41′** and **42′**, the rotor wheel **30′** is rotated in a precise manner, as described in connection with the previous embodiment.

While in each of the embodiments indicated in FIGS. 1 and 2 there is indicated an arrangement with a magnetic circuit which is changed, it is equally feasible to provide a single magnetic circuit only and change the intensity of magnetization thereof in accordance with the vibration of a tuning fork member as in the other embodiments. This may be done by oscillating a ferromagnetic body on the tuning fork. The ferromagnetic body may,

of course, be formed directly as a portion of the tuning fork prong elements. As indicated in each of the embodiments, it is possible to generate the rotary movement of the rotor wheels **30** and **30'** from the oscillations of a tuning fork without any mechanical friction and corresponding wear of the transmission parts. The amplitude of the mechanical oscillations is not critical and, in any event, the driving mechanism is such that the rotor cannot be rotated beyond a single deflection, even if the amplitude is too great. In addition, there are permanently constant damping conditions for the oscillating elements which are the result of the remagnetization of the stator. The mechanical construction of the individual components is relatively simple, and means for a convenient adjustment are easily provided.

While specific embodiments of the invention have been shown and illustrated and described in detail to set forth specific embodiments thereof, it will be understood that the invention may be embodied otherwise without departing from such principles.

What is claimed is:

1. A driving mechanism for clockwork and the like comprising a rotor having circumferentially spaced pole pieces with alternately opposite polarity, a stator defining a magnetic circuit including radii of said rotor, an oscillatable element, electrical means for oscillating said oscillatable element, said oscillatable element and said stator being oriented and being of materials such that the oscillation of said element influences the magnetic circuit defined by said stator and in turn causes rotation of said rotor, said stator including first and second pole pieces arranged on opposite sides of said rotor in opposition to each other and having a curved face extending around a respective portion of said rotor at a spaced location therefrom.

2. A driving mechanism for clockwork and the like comprising a rotor having circumferentially spaced pole pieces with alternately opposite polarity, a stator defining a magnetic circuit including radii of said rotor, an oscillatable element, electrical means for oscillating said oscillatable element, said oscillatable element and said stator being oriented and being of materials such that the oscillation of said element influences the magnetic circuit defined by said stator and, in turn, causes rotation of said rotor, said stator including two pole faces arranged in opposition to one another and with portions extending outwardly from each of the pole faces in opposite directions and with side portions extending on each side of said pole faces, and said side portions including inwardly directed yokes defining a gap, said oscillatable member including a tuning fork having a portion oscillatable within said gap.

3. A driving mechanism for clockwork and the like comprising a rotor having circumferentially spaced pole pieces with alternately opposite polarity, a stator defining a magnetic circuit including radii of said rotor, and including first and second pole pieces arranged in opposition to said rotor and being angularly spaced apart from each other in relation to the center of said rotor, an oscillatable element located adjacent said stator and in the magnetic field thereof, said oscillatable element being of a material to influence the magnetic field of said stator, and means for oscillating said oscillatable element to vary the influence thereof on the magnetic circuit of said stator and, in turn, cause rotation of said rotor.

4. A driving mechanism according to claim 2, wherein said tuning fork includes a ferromagnetic body which is positioned in said gap which oscillates backwardly and forwardly to change the magnetism of said pole faces during oscillation.

5. A driving mechanism according to claim 2, wherein said tuning fork element includes a permanent magnet which is oscillated in said gap.

6. A driving mechanism according to claim 2, wherein said stator includes permanent magnets comprising said side portions oriented with their poles in opposite directions.

7. A driving mechanism for a clockwork and the like comprising a rotar having circumferentially spaced pole pieces arranged with pole pieces of the same polarity alternately spaced with pole pieces of different polarity, a stator including a first curved pole piece arranged on one side of said rotor, and a second curved pole piece arranged on an opposite side of said rotor, a yoke extending outwardly from said first pole piece on each side of said rotor and alongside said second pole piece and extending inwardly below said second pole piece and terminating in pole faces which are spaced to define a gap, the gap being oriented along the center line of said second pole piece and an oscillatable member including a portion located in said gap of a material to influence the magnetic circuit defined by said stator, an electrical means to oscillate said oscillatable member to influence the magnetic circuits defined by said stator on each side of the center line of said rotor to cause rotation of said rotor during oscillation of said oscillatable member.

8. A driving mechanism according to claim 7, wherein said oscillatable member carries a permanent magnet at the end thereof.

9. An oscillatable member according to claim 7, wherein said stator includes permanent magnets arranged on each side of said rotor oriented with their poles directed in opposite directions.

10. A driving mechanism for a clockwork and the like comprising a central rotatable rotor having radially projecting pole pieces defined thereon at circumferentially spaced locations and said pole pieces being of alternately dissimilar polarity, the stator including a first curved pole piece arranged at one side of said rotor and a second curved pole piece arranged at the opposite side of said rotor, said first pole piece being formed as a yoke including side portions extending on each side of the center line of said rotor into a spaced location from said second pole piece to define a gap, a tuning fork including a prong portion arranged to oscillate within said gap, and electrical means for oscillating said tuning fork prong portion to influence the magnetic circuit defined on each side of the center line of said rotor to cause rotation of said rotor.

11. A driving mechanism according to claim 10, wherein said tuning fork includes a portion in said gap of ferremognetic material.

12. A driving mechanism according to claim 10, wherein said tuning fork includes a portion in said gap defining a magnet having one pole oriented in a direction toward one of the side portions of said stator and another opposite pole oriented toward the other side portion of said stator.

13. A driving mechanism according to claim 10, wherein the side portions of said stator include permanent magnets oriented in respect to the opposite side portion with the poles in opposite directions.

References Cited by the Examiner

UNITED STATES PATENTS

2,571,085	10/51	Clifford	310—103
2,606,222	8/52	Clifford et al.	310—21
2,662,205	12/53	Virkus et al.	

FOREIGN PATENTS

830,977	3/60	Great Britain.

MILTON O. HIRSHFIELD, *Primary Examiner.*