Oct. 5, 1943. E. G. GAYNOR 2,331,181

TWO BUTTON PERMANENTLY OFF SWITCH

Filed Nov. 5, 1941

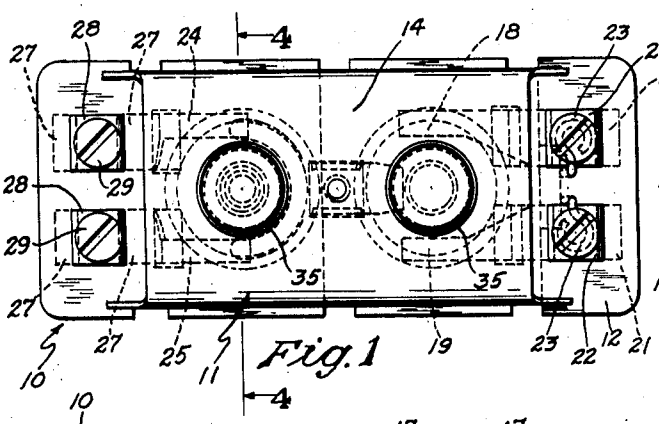

Fig. 1

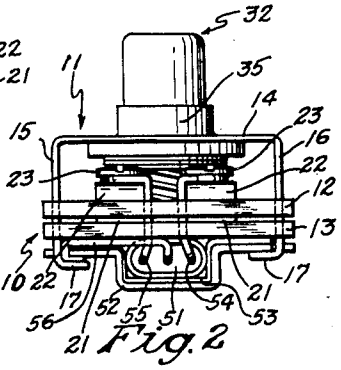

Fig. 2

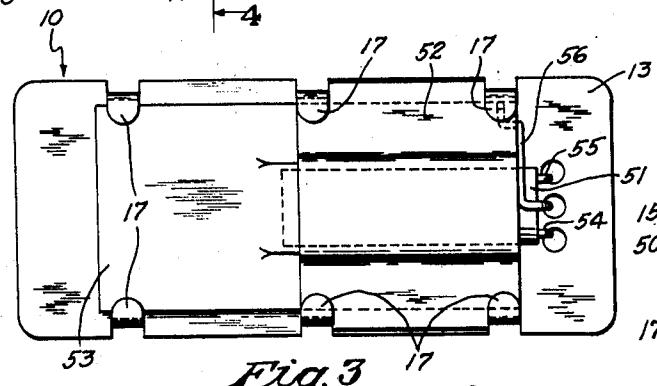

Fig. 3

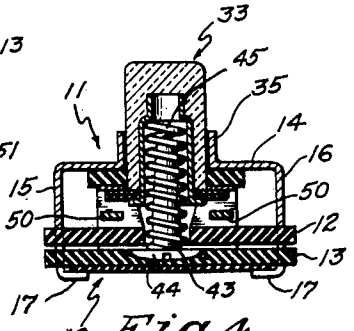

Fig. 4

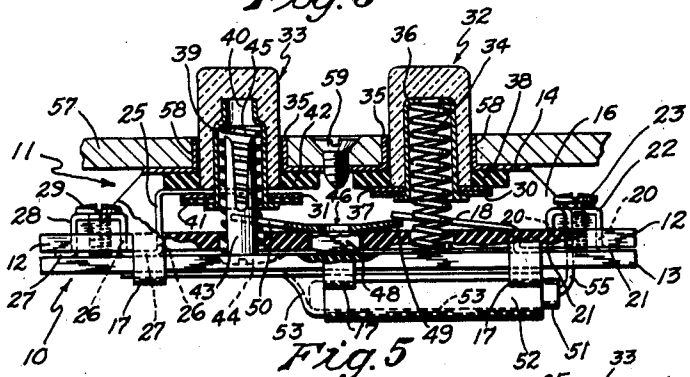

Fig. 5

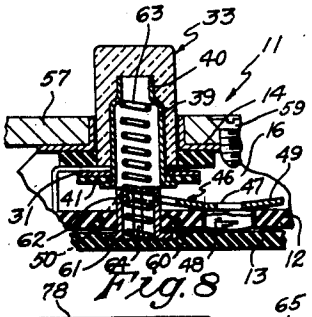

Fig. 8

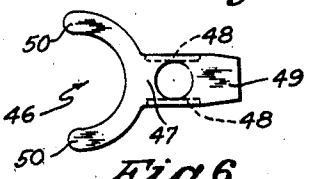

Fig. 6

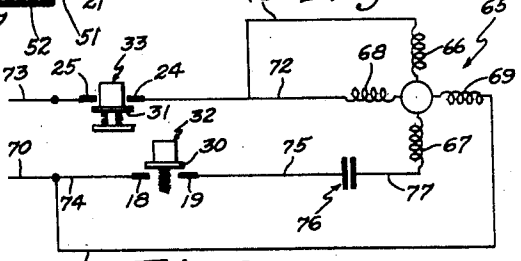

Fig. 9

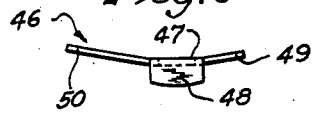

Fig. 7

INVENTOR

EDWIN G GAYNOR

BY John J. Hanrahan

ATTORNEY

Patented Oct. 5, 1943

2,331,181

UNITED STATES PATENT OFFICE

2,331,181

TWO-BUTTON PERMANENTLY OFF SWITCH

Edwin G. Gaynor, Fairfield, Conn.

Application November 5, 1941, Serial No. 417,911

13 Claims. (Cl. 200—5)

This invention relates to new and useful improvements in electrical apparatus and has particular relation to a switch such as may be used for the positive control of vapor lamps, single phase capacitor type motors, and like devices.

An object of the invention is to provide an improved permanently-off two button switch for the control of vapor lamps whereby when a lamp has been extinguished through the use of the improved switch the lamp will not be again put into operation by line surges such as may be caused by lightning, etc.

Another object is to provide a switch and condenser arrangement for the control of vapor lamps, the condenser being so constructed and connected as to fully prevent or suppress radio broadcasting by the lamp to the end that the latter will not in any way interfere with the proper operation of a radio receiving apparatus located in its vicinity.

A further object is to provide a switch of the kind generally indicated and which may be used to form part of the circuit of the type of motor mentioned and which switch permits of the elimination of the centrifugal type switch means usually employed with such motors.

Other objects and advantages will become apparent from a consideration of the following detailed description taken in connection with the accompanying drawing wherein satisfactory embodiments of the invention are shown. However, it is to be understood that the invention is not limited to the details disclosed but includes all such variations and modifications as fall within the spirit of the invention and the scope of the appended claims.

In the drawing:

Fig. 1 is a top plan view of the switch of the invention;

Fig. 2 is an end elevational view thereof, the view being taken as looking from the right hand end of Fig. 1;

Fig. 3 is a bottom plan view of the switch;

Fig. 4 is a sectional view taken as along the plane of the line 4—4 of Fig. 1;

Fig. 5 is a side view of the switch with parts broken away and with other parts shown in central longitudinal section;

Fig. 6 is a top plan view of a kicker element employed;

Fig. 7 is a side elevational view of such element;

Fig. 8 is a detail sectional view showing a slight modification of switch construction; and

Fig. 9 shows the wiring diagram of the switch and a single phase capacitor type motor.

Referring in detail to the drawing and at first more particularly to Figs. 1 through 7, the switch of the invention includes a casing or body comprising a base generally designated 10 and a cover generally designated 11. Base 10 is made up of inner and outer elements 12 and 13 preferably of a stiff but infrangible insulating material. Cover 11 is of metal and includes a top or outer wall 14, side walls 15 and 16 and attaching lugs 17 serving to secure the cover to the base 10 and to secure the elements of the latter together in contact supporting relation.

A pair of stationary spring contacts 18 and 19 are located at the inner side and near one end of the base member 12 and these contacts are mounted on the base by having portions 20 passing through the inner base element and by having portions 21 clamped between the base elements. Further the contacts include raised portions 22 mounting binding screws 23 by means of which leads may be connected with the contacts as will be understood. It is noted that the contacts 18 and 19 are located relatively close to the inner base element 12.

Near the opposite end of the base 10 are a pair of stationary contacts 24 and 25 mounted as by portions 26 passing through the inner base member 12 and by portions 27 clamped between the base members. A raised portion 28 of each contact mounts a binding screw 29 for the securing of leads. Contacts 24 and 25 are also spring structures and it is noted that they are spaced above the base.

Movable contacts 30 and 31 are carried by push buttons 32 and 33 respectively and are adapted to engage and bridge the contacts 18 and 19 and 24 and 25 respectively to close circuits through the respective pairs of stationary contacts as will later be set forth in more detail. Push button 32 is hollow and open through its inner end. A coil spring 34 passes through an opening in the inner base member 12 and bears at its outer end against the outer base member 13 and such spring enters the open end of the push button 32 and is constantly tending to move such push button to projected position.

Buttons 32 and 33 extend through the top wall 14 of the cover 11 and such wall carries outwardly directed annular flanges 35 serving as a guide means for the push buttons.

A hollow metal member or rivet 36 has a forced fit in the button 32 and the flange on the inner end of such rivet clamps the movable contact

30 against a backing disc or annular 37 of a stiff insulating material. About the button 32 and against the inner surface of cover wall 14 is a relatively thick annulus 38 of insulating material.

With the described arrangement it will be clear that when button 32 is depressed against the tendency of spring 34 the movable contact 30 is brought into engagement with the stationary contacts 18 and 19 closing a circuit through them. On release of the push button the spring 34 will return it to its normal projected position carrying contact 30 away from contacts 18 and 19 and opening the circuit. Annulus 38 limits outward movement of the button 32 and in addition to being a cushion limiting the outward movement of the push button serves also to insulate contact 30 from the casing top wall 14.

Push button 33 is hollow and contains a hollow rivet 39 the inner end portion 40 of which is of reduced diameter. This rivet has a forced fit in the button and the inner annular flange of the rivet clamps an insulating annulus 41 against the movable contact 31 of said button and thereby secures such contact to the lower or inner end of the button. A thick annulus 42 of insulating material is disposed about the button at the inner side of the cover wall 14 and the stationary contacts 24 and 25 are disposed against said annulus and between the latter and the movable contact 31.

A bifurcated member or split rivet 43 has its head 44 disposed between the base members 12 and 13 with its shank passing upwardly through the former and entering the rivet 39 of the button 33. A coil spring 45 is disposed about the member 43 and bears at one end against the head of said member and such spring enters the rivet 39. Spring 45 constantly tends to retain the button 33 in the projected position in which it is shown and serves to return the button to such position when the button is not held against the action of the spring.

A kicker 46 is mounted on base 10 and includes an intermediate body portion 47 carrying a pair of downwardly extending lugs 48 slightly curved at their free ends. An arm 49 projects from one end of the body portion 47 while the other end thereof carries a yoke comprising a pair of spaced arms 50. Kicker 46 is mounted on the base 10 by having the lugs 48 disposed in an opening in the inner base member 12 and bearing at their free ends on the inner surface of the outer base member 13.

From this description and the drawing it will be understood that the lugs 48 are of lengths slightly greater than the thickness of the inner base member 12. The kicker arm 49 is located below the movable contact 30 and the yoke arms 50 of the kicker are located below the insulating annulus 41 on the button 33 and one of the arms 50 is disposed at each side of the bifurcated member 43.

When using the switch in a vapor lamp circuit button 33 is depressed to carry contact 31 away from the stationary contacts 24 and 25 and thus open the operating or line circuit of the lamp to extinguish the latter. As button 33 is depressed it moves over the member 43 with the result that the split yielding portion of the latter is received in the reduced diameter portion 40 of the rivet 39 and is compressed in frictional engagement with the sides of such rivet portion.

The mentioned compression of the member 43 is due to the fact that its diameter is such that its legs are forced toward one another as the rivet portion 40 moves over the member. Thus the button is wedged onto the member 43 and the frictional engagement between these parts serves to retain the button in depressed position against the tendency of the spring 45 and thus the button is in a permanently-off open circuit position.

As button 33 is depressed the insulating annulus 41 engages the arms 50 of the kicker and moves such arms downwardly rocking the kicker on its lugs 48 to carry its arm 49 upwardly. Now when the vapor lamp is to be again energized starter button 32 is depressed to close a heater circuit through the filaments of the lamp by bringing movable contact 30 into engagement with stationary contacts 18 and 19. When push button 32 is thus depressed it engages the kicker arm 49 and forces the same downwardly thereby rocking the kicker on its lugs 48 in a direction to raise its arms 50 which are under the button 33.

As the kicker is thus forced to move it lifts the button 33 off the member 43 or frees the button from such member whereupon the spring 45 moves the button 33 and parts carried thereby to projected button position. In this position of button 33 the circuit through the contacts 24 and 25 is closed by the movable contact 31. At this time movable contact 30 has been brought into circuit closing relation with the contacts 18 and 19. Button 32 is manually held depressed only long enough to bring about heating of the filaments of the lamp and thereafter is released and returned to projected position. It will be understood that at this time contact 31 remains in circuit closing relation with the contacts 24 and 25 completing the operating circuit of the lamp.

A three element condenser 51 is mounted on the outer side of base 10 by a metal plate 52 the edge portions of which are clamped against the base by the cover attaching lugs 17 above mentioned. Between metal plate 52 and the condenser is a paper insulator 53. Two of the elements of the condenser 51 are connected with the respective binding screws 23 of the stationary contacts 18 and 19 by leads 54 and 55 respectively. The third or intermediate condenser element is grounded on the metal cover 11 by a lead 56.

With this arrangement radio broadcasting or radio interference by the controlled vapor lamp is absolutely prevented. As shown the lead 56 is clamped under one of the lugs 17 although it is to be understood that one, preferably the intermediate condenser element may be electrically connected with the metal switch cover in any desired manner.

The switch of the invention is shown in Fig. 5 as mounted on a metal lamp base 57. To such purpose the lamp base is provided with a pair of openings 58 spaced as are the outwardly directed annular cover carried flanges 35 about the buttons 32 and 33. These flanges have snug fits in the openings 58 and preferably come about flush with the upper surface of the lamp base to give to the assembly a neat and finished appearance. A screw 59 passes through the lamp base 57 and into the cover 11 and securely attaches the latter to the former whereby the third element of the condenser is grounded on the lamp base.

Referring to the modification of Fig. 8 many of the parts shown have been described as to

their structure and function and to avoid repetition have been given the same reference characters. In this figure a split bushing 60 is substituted for the bifurcated member 43 of the figures first described. Bushing 60 includes an annular flange or head 61 disposed at the under side of the base member 12 and completely concealed and insulated by such member in cooperation with the base member 13.

The shank 62 of the bushing extends through the base member 12 and is aligned with the inner open end of the button 33. A coil spring 63 passes through and is guided by the bushing 60 and bears at its inner end against base member 13 and at its outer end against the shoulder formed by reducing the diameter of the portion 40 of rivet 39. It is noted that the split 64 extends the length of the bushing so that the latter is yielding or compressible.

Bushing 60 is normally of a diameter substantially the same as the inner diameter of the rivet 39 within the button 33. Therefore as button 33 is depressed to extinguish a lamp or for a like purpose the rivet 39 is forced over the split bushing 60. As the rivet moves over the bushing it tends to compress or squeeze the latter forcing the sides or edges of the split 64 toward one another.

In this way a frictional engagement is established between the button 33 and the bushing whereby the button is retained in depressed open circuit position. Kicker 46 is present and functions as previously described and it therefore will be understood that when the switch button 32 is next depressed button 33 will be forced or lifted off the bushing 60. This split bushing is somewhat less expensive and easier to assemble than is the member 43.

Referring now to the circuit of Fig. 9, at 65 is generally indicated a single phase capacitor type motor including starter windings 66 and 67 and regular or operating windings 68 and 69. The line circuit of the motor is through leads 70 and 71, windings 69 and 68, lead 72, switch contacts 24, 31 and 25, and lead 73. The starter winding circuit is through leads 70 and 74, switch contacts 18, 30 and 19, lead 75, condenser 76 (although it will be understood that the condenser may be replaced with a reactor) lead 77, windings 67 and 66 and return lead 78 to lead 72.

To start the motor switch button 32 is depressed and closes the circuit through the starter windings and such button through kicker 46 brings about closing of the switch 33 and thus the completion of the starter circuit and the making of the line circuit of the motor. When the motor starts button 32 is released opening the starting circuit of the motor and the latter operates in the usual manner. Thereafter to stop the motor switch 33 is depressed to its permanently-off position where it is held by the member 43 or the bushing 60.

From the foregoing it will be understood that with my present switch in the motor circuit the single phase capacitor type motor may be started and will function perfectly without the use of the centrifugal disconnecting switch usually incorporated in such motors to open the starter circuit after the motor is in operation.

Having thus set forth the nature of my invention, what I claim is:

1. In a switch, a base, a pair of spaced stationary contacts on said base, a movable contact, manual means for moving said movable contact into engagement with said stationary contacts, a spring normally maintaining said movable contact spaced from the stationary contacts, a second pair of stationary contacts on said base, a second movable contact, a spring tending to move said second movable contact into engagement with said second pair of stationary contacts, manual means for moving said second movable contact against the tendency of said spring, a fixed means on said base and into engagement with which said second manual means is moved when operated to carry the second movable contact away from the second pair of stationary contacts to hold said second manual means and the second movable contact against the action of said spring with the second movable contact spaced from the second pair of stationary contacts, and means on said base and operable by the first mentioned manual means as the latter is moved to close a circuit through the first mentioned pair of stationary contacts to force said second manual means out of engagement with said fixed means.

2. In a switch, a casing including a base and a cover, a pair of stationary contacts on said base, a push button operable through said cover, a movable contact on said button, said button movable to and from a position having said movable contact bridge said stationary contacts to close a circuit through them, a spring to move said push button to projected position, and stationary means fixed on said base and adapted to hold said push button against the action of said spring when the push button is depressed.

3. In a switch, a casing including a base and a cover, a pair of stationary contacts on said base, a push button operable through said cover, a movable contact on said button, said button movable to and from a position having said movable contact bridge said stationary contacts to close a circuit through them, a spring to move said push button to projected position, stationary means fixed on said base and adapted to hold said push button against the action of said spring when the push button is depressed, and means operable from the exterior of said casing to release said push button from said stationary means whereby the spring may return the push button to projected position.

4. In a switch, a casing including a base and a cover, a pair of contacts on said base, a push button operable through said cover, a contact element on said push button, said button movable to and from a position having said contact element bridge said pair of contacts to close a circuit through them, a spring to move said push button to projected position, a stationary means on said base and adapted to hold said push button against the action of said spring when the push button is depressed, a kicker on said base and including a portion extending under said push button, and a means movable through said cover and adapted when moved inwardly of the cover to engage and impart rocking movement to said kicker to have the same move said push button from said stationary means.

5. The switch as in claim 2 including a second push button movable through said cover, a spring normally maintaining said second push button in projected position, a kicker on said base and including portions extending under the first and second push buttons respectively, and said second push button adapted when depressed to impart rocking movement to said kicker to have the same move the first mentioned push button from said stationary means.

6. In a switch, a casing including a base and a cover, a pair of stationary contacts on said base, a push button operable through said cover, a movable contact on said push button, said push button shiftable between positions wherein said movable contact engages said stationary contacts to close a circuit through them and a position wherein the movable contact is spaced from said stationary contacts, a spring to move said push button to one of said positions, and means fixed in said casing and adapted to engage said push button when the same is moved against said spring and frictionally hold said push button against the action of the spring.

7. The push button as in claim 6 including means operable from the exterior of the casing to release said push button from said fixed means whereupon the spring moves the push button.

8. In a switch, a casing including a base and a cover, said base comprising a pair of pieces of insulating material disposed one on the other, stationary contacts on the inner side of said base, a hollow push button open through its inner side and movable through said cover, a movable contact on said push button, said push button shiftable between positions wherein said movable contact engages said stationary contacts to close a circuit through them and a position spacing said movable contact from said stationary contacts, a spring normally tending to move said push button to projected position, means supported by said base and having a compressible portion extending toward said push button and in alignment therewith, and said compressible portion adapted to enter the open end of said push button and be compressed thereby to frictionally maintain the push button in depressed position when moved thereto against the action of the spring.

9. In a switch, a casing including a base and a cover, said base comprising a pair of pieces of insulating material disposed one on the other, stationary contacts on the inner side of said base, a hollow push button open through its inner side and movable through said cover, a movable contact on said button, said button shiftable between positions wherein said movable contact engages said stationary contacts to close a circuit through them and a position spacing said movable contact from said stationary contacts, a spring normally tending to move said push button to projected position, a split rivet supported by said base, said rivet having its head disposed between said pieces of the base and having its shank passing through the inner of said pieces and aligned with the open inner end of said button, and said button when depressed adapted to telescope over the free end of said rivet and frictionally engage the same whereby the push button is held depressed.

10. In the switch as in claim 8, a kicker on said base and including a portion extending under said button, and means operable from the exterior of said casing for imparting a rocking movement to the kicker to have the same lift the button off said means having the compressible portion whereupon the spring may return the button to projected position.

11. The switch as in claim 8 characterized by a recess in the inner face of the inner of the pieces comprising the base, a kicker comprising a body including an end portion extending under said push button, a lug on said kicker and disposed in said recess and having a curved edge engaging the inner face of the outer of said base pieces, a second push button movable through said cover, a spring normally maintaining said second push button in projected position, said kicker including a portion extending under said second push button, and said second push button adapted when depressed to engage the last mentioned kicker portion and depress the same to impart rocking movement to the kicker and cause its first mentioned portion to raise the first mentioned push button off said means having the compressible portion.

12. In a switch, a casing including a base and a cover, a pair of stationary contacts on said base, a hollow push button operable through said cover, a movable contact on said push button, said push button movable to and from a position having said movable contact bridge said stationary contacts to close a circuit through them, a spring to move said push button to projected position, said hollow push button open through its inner end, a means on said base and adapted to enter said hollow push button and frictionally hold said push button against the action of said spring when the push button is depressed.

13. In a switch, a casing including a base and a cover, said base comprising a pair of pieces of insulating material disposed one on the other, stationary contacts on the inner side of said base, a hollow push button open through its inner side and movable through said cover, a movable contact on said push button, said push button shiftable between positions wherein said movable contact engages said stationary contacts to close a circuit through them and a position spacing said movable contact from said stationary contacts, a spring normally tending to move said push button to projected position, a split bushing supported by said base, said bushing having its head between the base pieces and having its shank passing through the inner of the base pieces and aligned with the open inner end of said push button, and said push button when depressed adapted to telescope over the free end of said bushing and compress and frictionally engage the same whereby the push button will be held depressed.

EDWIN G. GAYNOR.