US011039247B2

(12) **United States Patent**
Milani et al.

(10) **Patent No.: US 11,039,247 B2**
(45) **Date of Patent: Jun. 15, 2021**

(54) **EXTENDED BANDWIDTH ADAPTIVE NOISE CANCELLING SYSTEM AND METHODS**

(71) Applicant: **Google LLC**, Mountain View, CA (US)

(72) Inventors: **Ali Abdollahzadeh Milani**, San Francisco, CA (US); **Govind Kannan**, Irvine, CA (US); **Trausti Thormundsson**, Irvine, CA (US)

(73) Assignee: **Google LLC**, Mountain View, CA (US)

(*) Notice: Subject to any disclaimer, the term of this patent is extended or adjusted under 35 U.S.C. 154(b) by 0 days.

(21) Appl. No.: **16/721,580**

(22) Filed: **Dec. 19, 2019**

(65) **Prior Publication Data**

US 2020/0204916 A1 Jun. 25, 2020

Related U.S. Application Data

(60) Provisional application No. 62/782,312, filed on Dec. 19, 2018.

(51) **Int. Cl.**
H04R 3/04 (2006.01)
G10L 21/0232 (2013.01)
(Continued)

(52) **U.S. Cl.**
CPC ***H04R 3/04*** (2013.01); ***G10L 21/0232*** (2013.01); ***H04R 5/033*** (2013.01); ***H04R 5/04*** (2013.01); *H04R 2460/01* (2013.01)

(58) **Field of Classification Search**
CPC G10K 11/17854; G10K 11/17881; G10K 2210/3026; G10K 2210/3027;
(Continued)

(56) **References Cited**

U.S. PATENT DOCUMENTS

9,361,872 B2 6/2016 Park et al.
9,578,432 B1 2/2017 Abdollahzadeh Milani et al.
(Continued)

FOREIGN PATENT DOCUMENTS

JP 2008-060759 3/2008
JP 2008-300894 12/2008

OTHER PUBLICATIONS

Written Opinion and International Search Report for International App. No. PCT/US2019/067644, 17 pages.

Primary Examiner — Vivian C Chin
Assistant Examiner — Douglas J Suthers
(74) *Attorney, Agent, or Firm* — Lerner, David, Littenberg, Krumholz & Mentlik, LLP

(57) **ABSTRACT**

Adaptive noise cancellation systems and methods include a reference sensor to sense environmental noise and generate a corresponding reference signal, an error sensor to sense noise in a noise cancellation zone and generate a corresponding error signal, a noise cancellation path including a noise cancellation filter and a variable gain component, the noise cancellation path receiving the reference signal and generating an anti-noise signal to cancel noise at an eardrum reference point, and an adaptation module to receive the reference signal and the error signal and adaptively adjust weights of the noise cancellation filter and/or the variable gain component. An adaptive gain control block updates the variable gain component. Inputs to the adaptive gain control block are conditioned using programmable filters to protect against low frequency transients and/or high frequency distractors in the environmental noise. The programmable filters are tuned to optimize cancellation at an eardrum reference point.

18 Claims, 6 Drawing Sheets

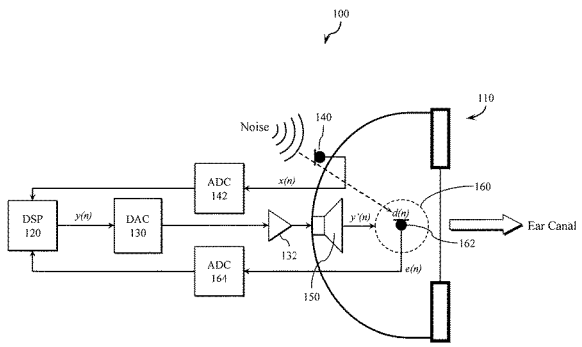

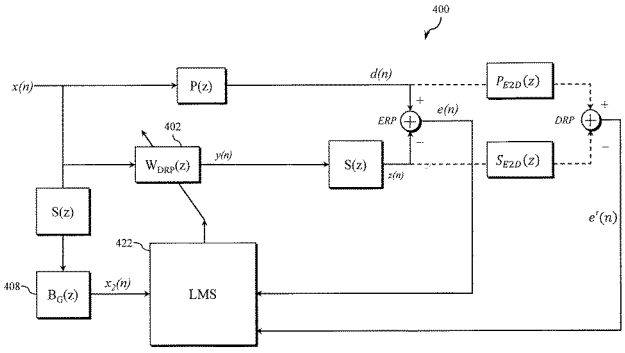

(51) **Int. Cl.**
H04R 5/033 (2006.01)
H04R 5/04 (2006.01)

(58) **Field of Classification Search**
CPC ... G10K 2210/3028; G10K 2210/3056; G10K 2210/3044; G10K 11/17827; H04R 3/04; H04R 5/033; H04R 5/04; H04R 2460/01; G10L 21/0232
USPC 381/71.11
See application file for complete search history.

(56) **References Cited**

U.S. PATENT DOCUMENTS

9,741,334	B2	8/2017	Park et al.	
2011/0007907	A1*	1/2011	Park	G10K 11/17881 381/71.8
2012/0140917	A1*	6/2012	Nicholson	G10K 11/17881 379/392.01
2014/0072134	A1*	3/2014	Po	G10K 11/17885 381/71.11

* cited by examiner

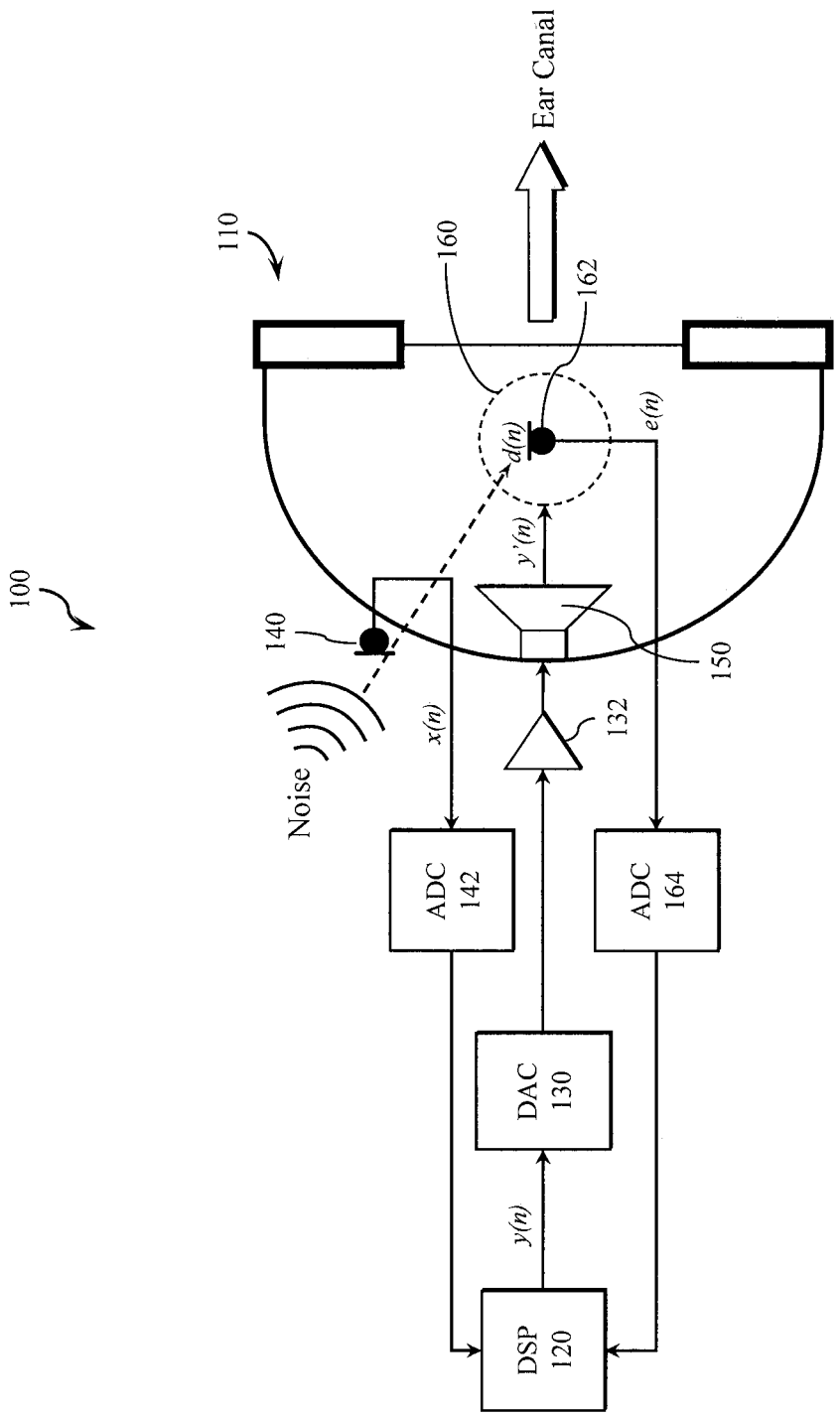
100
110
Ear Canal
160
162
d(n)
e(n)
y'(n)
140
150
Noise
x(n)
132
ADC
142
ADC
164
DAC
130
y(n)
DSP
120

FIG. 1

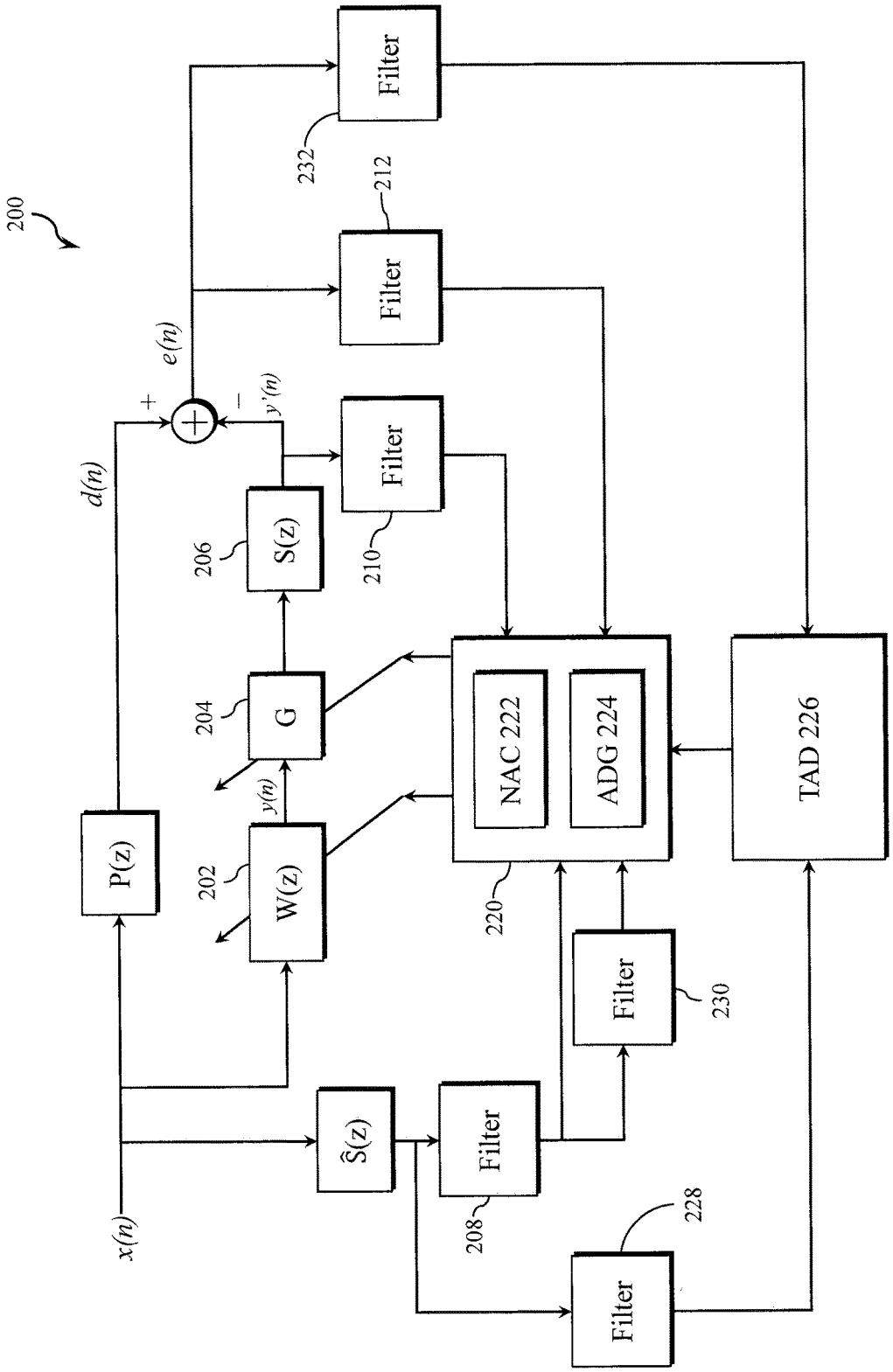
200
x(n)
P(z)
d(n)
W(z)
202
y(n)
G
204
S(z)
206
e(n)
+
−
y'(n)
Filter
210
Filter
212
Filter
232
Ŝ(z)
Filter
208
Filter
228
Filter
230
NAC 222
ADG 224
220
TAD 226

FIG. 2

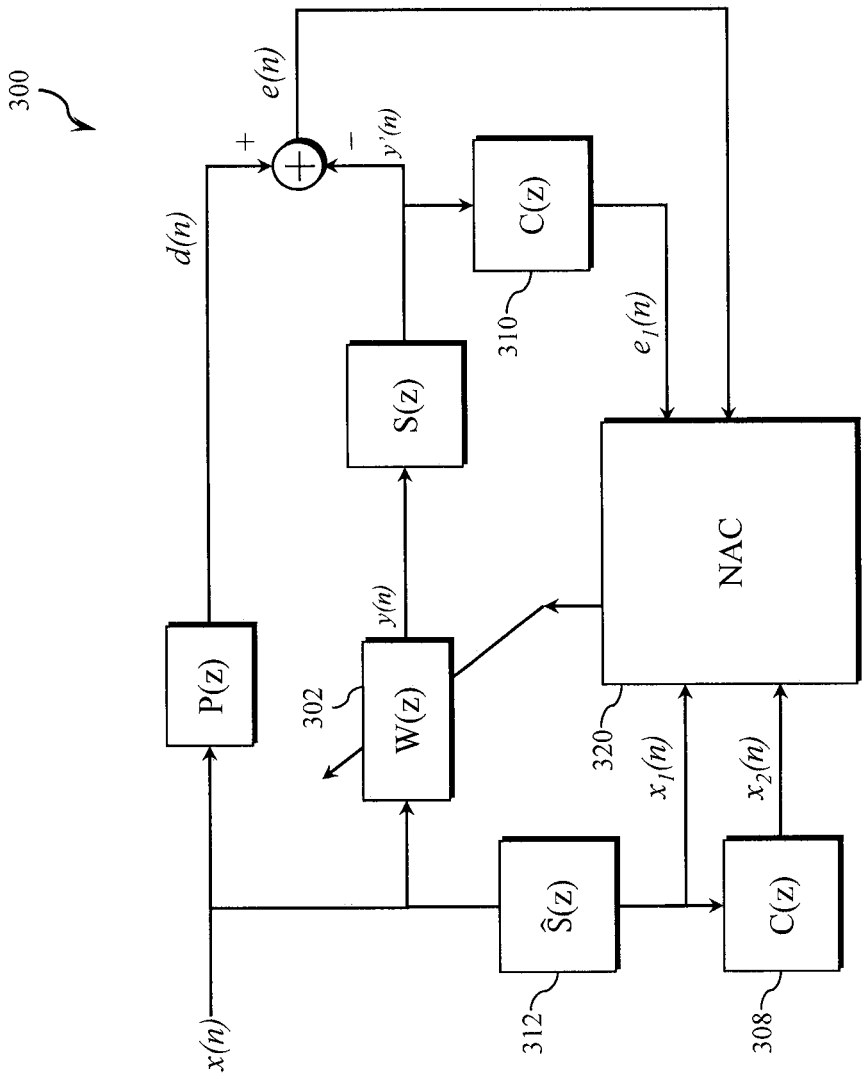
300
x(n)
P(z)
d(n)
+
e(n)
−
y'(n)
W(z)
302
y(n)
S(z)
C(z)
310
e1(n)
Ŝ(z)
312
C(z)
308
x1(n)
x2(n)
NAC
320

FIG. 3

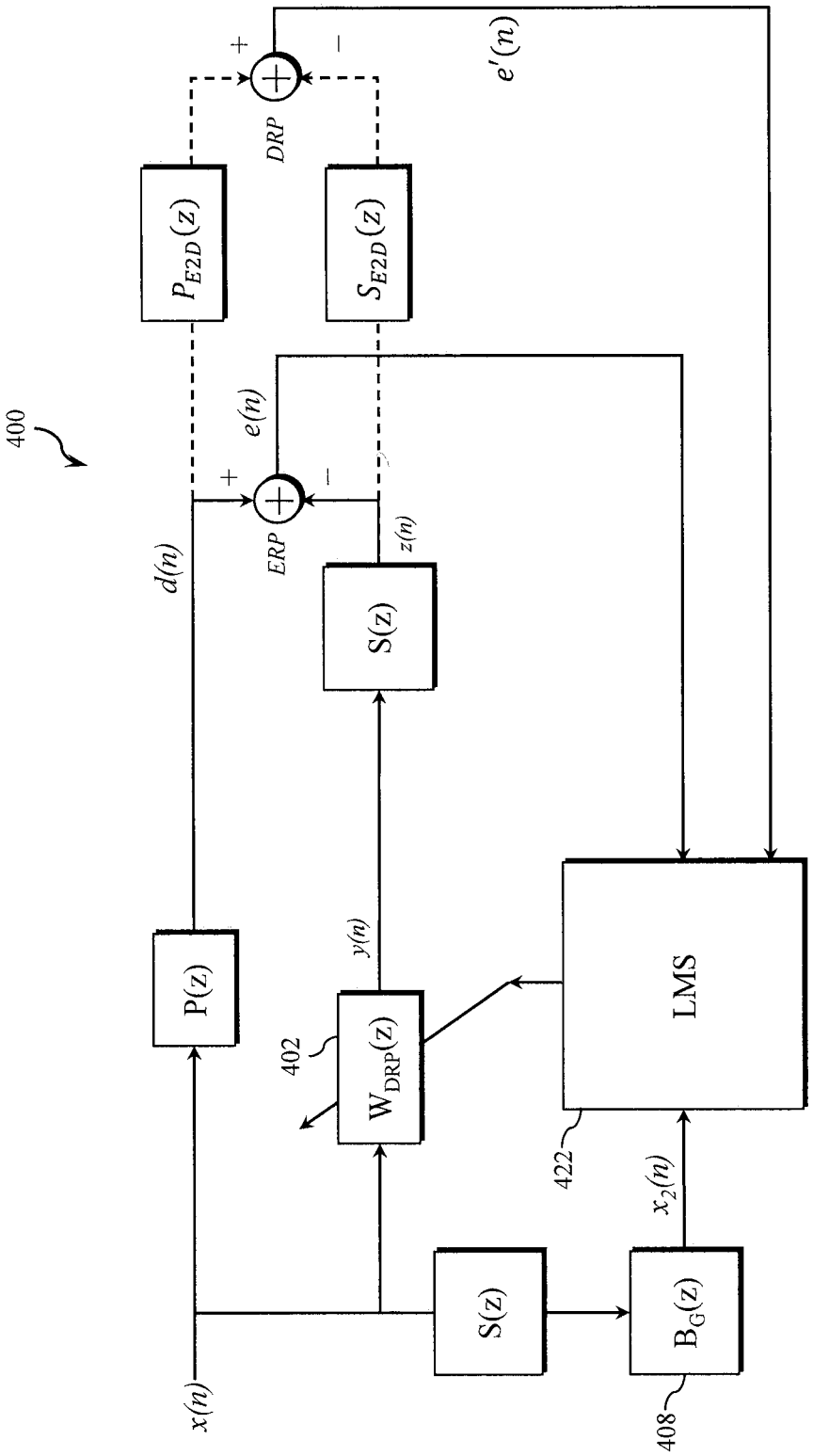
400
x(n)
P(z)
d(n)
S(z)
y(n)
402
W_DRP(z)
z(n)
S(z)
B_G(z)
408
x_2(n)
LMS
422
ERP
e(n)
P_E2D(z)
S_E2D(z)
DRP
e'(n)

FIG. 4A

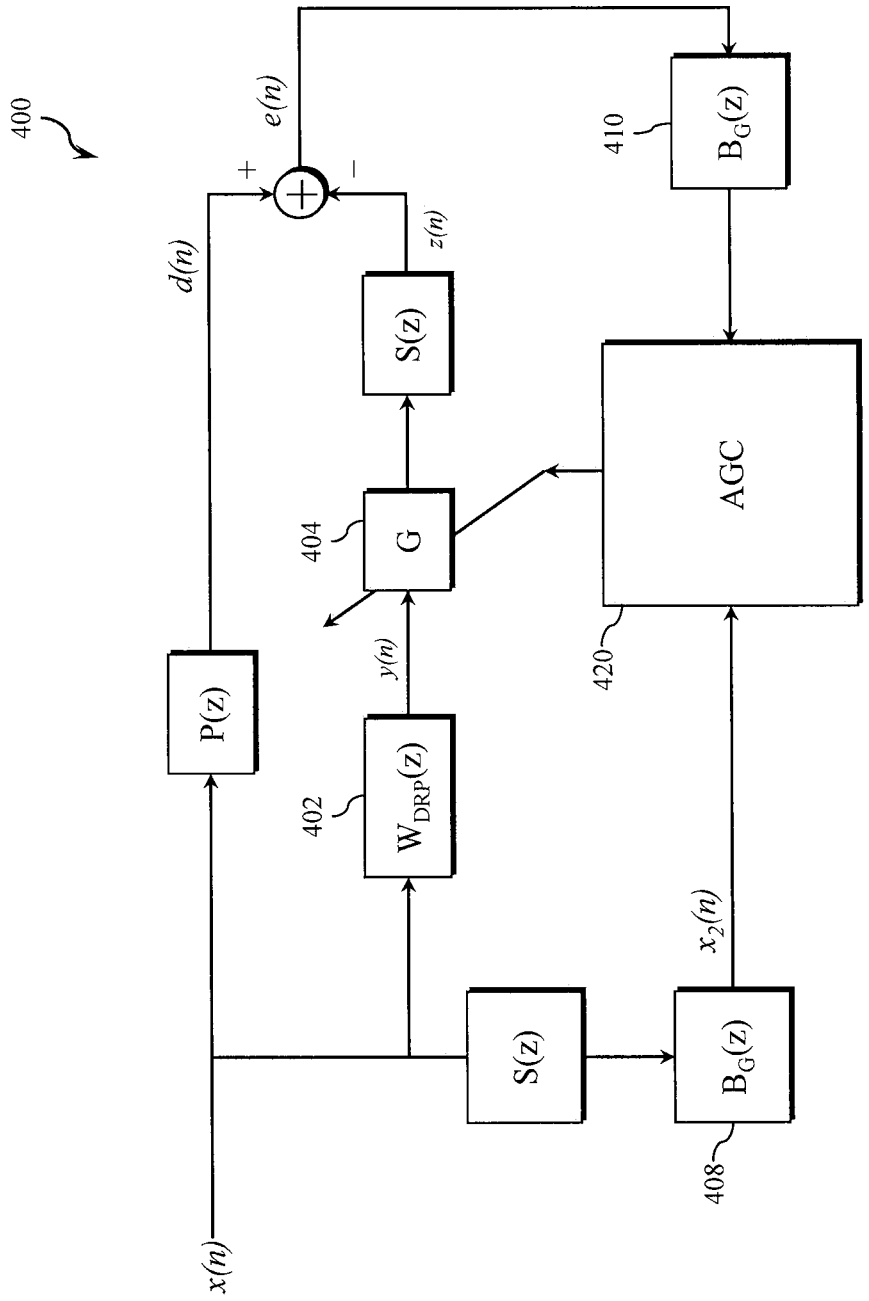
400
x(n)
P(z)
d(n)
+
e(n)
−
z(n)
S(z)
402
W_DRP(z)
y(n)
404
G
S(z)
B_G(z)
408
x_2(n)
AGC
420
B_G(z)
410

FIG. 4B

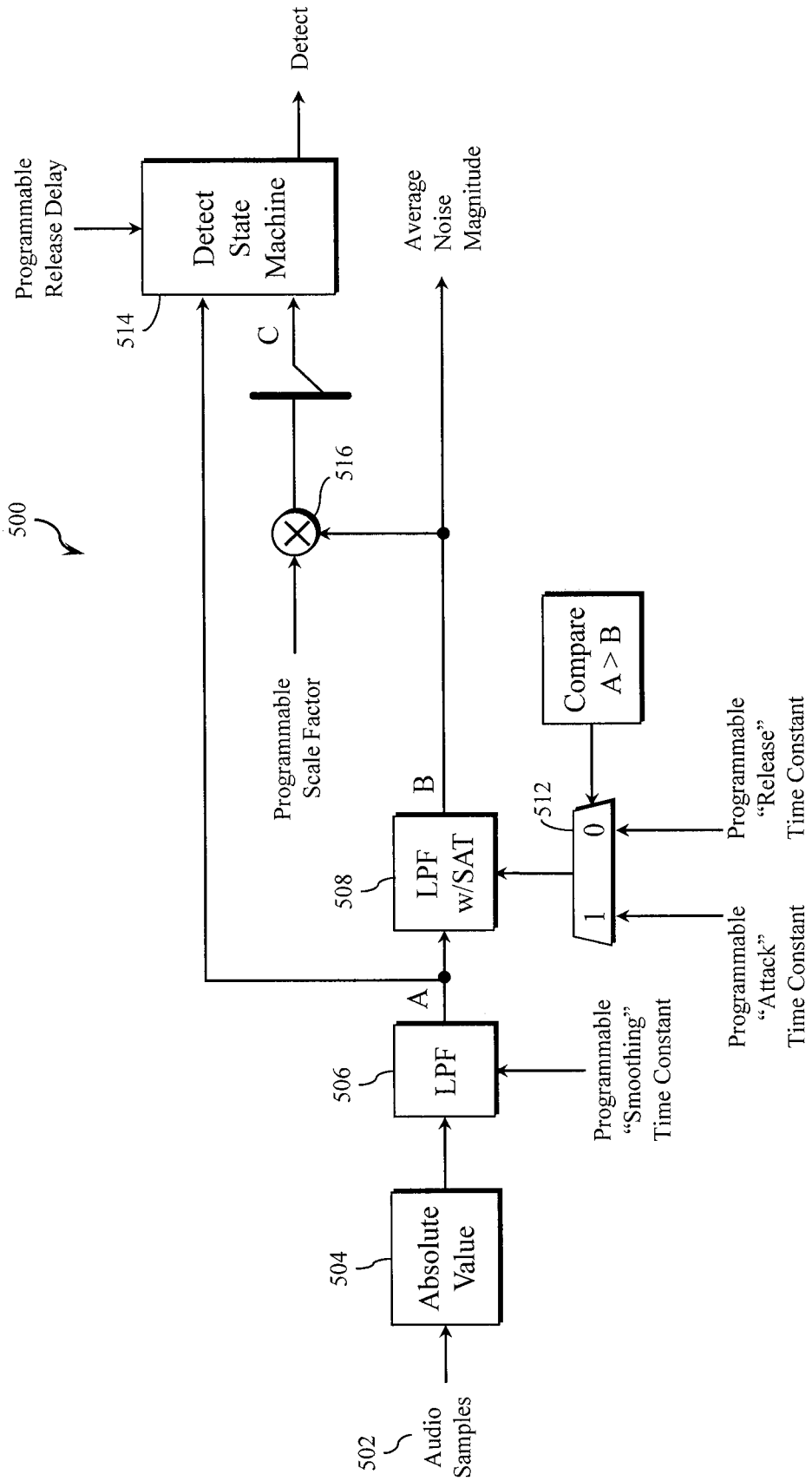
500
Programmable Release Delay
514
Detect State Machine
Detect
C
516
Average Noise Magnitude
Programmable Scale Factor
B
508
LPF w/SAT
512
Compare A > B
0
1
Programmable "Release" Time Constant
Programmable "Attack" Time Constant
A
506
LPF
Programmable "Smoothing" Time Constant
504
Absolute Value
502
Audio Samples

FIG. 5

EXTENDED BANDWIDTH ADAPTIVE NOISE CANCELLING SYSTEM AND METHODS

CROSS-REFERENCE TO RELATED APPLICATIONS

This application claims priority to and the benefit of U.S. Provisional Patent Application No. 62/782,312 filed Dec. 19, 2018 and entitled "EXTENDED BANDWIDTH ADAPTIVE NOISE CANCELLING SYSTEM AND METHODS", which is hereby incorporated by reference in its entirety.

TECHNICAL FIELD

The present application relates generally to noise cancelling systems and methods, and more specifically, for example, to adaptive noise cancelling systems and methods for use in headphones (e.g., circum-aural, supra-aural and in-ear types), earbuds, hearing aids, and other personal listening devices.

BACKGROUND

Adaptive noise cancellation (ANC) systems commonly operate by sensing noise through a reference microphone and generating a corresponding anti-noise signal that is approximately equal in magnitude, but opposite in phase, to the sensed noise. The noise and anti-noise signal cancel each other acoustically, allowing the user to hear only a desired audio signal. To achieve this effect, a low-latency, programmable filter path from the reference microphone to a loudspeaker that outputs the anti-noise signal may be implemented. In operation, conventional anti-noise filtering systems do not completely cancel all noise, leaving residual noise and/or generating audible artefacts that may be distracting to the user. There is therefore a continued need for improved adaptive noise cancellation systems and methods for headphones, earbuds and other personal listening devices.

SUMMARY

Systems and methods are disclosed for providing noise amplification control for adaptive noise cancellation in audio listening devices. In various embodiments, adaptive noise cancellation systems and methods provide improved bandwidth at the listener's ear-drum in an adaptive approach.

In one or more embodiments, an adaptive noise cancellation system includes a reference sensor operable to sense environmental noise and generate a corresponding reference signal, an error sensor operable to sense noise in a noise cancellation zone and generate a corresponding error signal, a noise cancellation path comprising a noise cancellation filter and a variable gain component, the noise cancellation path operable to receive the reference signal and generate an anti-noise signal to cancel the environmental noise at an eardrum reference point, and an adaptation module operable to receive the reference signal and the error signal and adaptively adjust weights of the noise cancellation filter and/or the variable gain component.

In some embodiments, the adaptation module comprises an adaptive gain control block operable to update the variable gain component. Inputs to the adaptive gain control block may be conditioned using programmable filters operable to protect against low frequency transients and/or high frequency distractors in the environmental noise. The programmable filters may include a low pass filter that filters out high frequencies determined to be in a range that creates constructive interference between the cancellation zone and the eardrum reference point, and/or a high pass filter that filters out low frequencies determined to be in a range that cannot be heard by a user of the noise cancellation system. The adaptation module may be tuned to cancel noise at the eardrum reference point, using the error signal sensed in the noise cancellation zone.

In one or more embodiments, a method includes receiving a reference signal from a first sensor, the reference signal representing external noise, processing the reference signal through a noise cancellation path comprising a noise cancellation filter and a variable gain component, to generate an anti-noise signal, receiving an error signal from a second sensor, the error signal representing noise in a noise cancellation zone and adaptively adjusting the noise cancellation filter in response to the reference signal, the error signal and an adaptive gain control process to cancel the external noise at an eardrum reference point.

The method may further include conditioning inputs to the adaptive gain control process using programmable filters to protect against low frequency transients and/or high frequency distractors in the external noise. The conditioning may further include low pass filtering out high frequencies determined to be in a range that (i) creates constructive interference between the cancellation zone and the eardrum reference point and (ii) differs in noise cancellation performance between the cancellation zone and the eardrum reference point, and/or high pass filtering out low frequencies determined to be in a range that cannot be heard by a user. The method may further include tuning the noise cancellation path to cancel noise at the eardrum reference point, using the error signal sensed in the noise cancellation zone.

The scope of the invention is defined by the claims, which are incorporated into this section by reference. A more complete understanding of embodiments of the invention will be afforded to those skilled in the art, as well as a realization of additional advantages thereof, by a consideration of the following detailed description of one or more embodiments. Reference will be made to the appended sheets of drawings that will first be described briefly.

BRIEF DESCRIPTION OF THE DRAWINGS

Aspects of the disclosure and their advantages can be better understood with reference to the following drawings and the detailed description that follows. It should be appreciated that like reference numerals are used to identify like elements illustrated in one or more of the figures, wherein showings therein are for purposes of illustrating embodiments of the present disclosure and not for purposes of limiting the same. The components in the drawings are not necessarily to scale, emphasis instead being placed upon clearly illustrating the principles of the present disclosure.

FIG. **1** illustrates an adaptive noise cancellation headset in accordance with one or more embodiments of the present disclosure.

FIG. **2** illustrates an adaptive noise cancellation system in accordance with one or more embodiments of the present disclosure.

FIG. **3** illustrates an adaptive noise cancellation system, including a noise amplification control subsystem, in accordance with one or more embodiments of the present disclosure.

FIGS. **4**A-B illustrate an adaptive noise cancellation system, including an adaptive gain control subsystem, in accordance with one or more embodiments of the present disclosure.

FIG. **5** illustrates a transient activity detector for an adaptive noise cancellation system in accordance with one or more embodiments of the present disclosure.

DETAILED DESCRIPTION

In accordance with various embodiments, improved adaptive noise cancellation (ANC) systems and methods are disclosed. An ANC system for a headset or other personal listening device may include a noise sensing reference microphone for sensing environmental noise, an error microphone for sensing an acoustic mixture of the noise and anti-noise generated by the ANC device, and a signal processing sub-system that generates the anti-noise to cancel the environmental noise. The signal processing sub-system may be configured to continually adjust the anti-noise signal to achieve consistent cancellation performance across users, environmental noise conditions, and device units. In various embodiments, the adaptation systems and methods disclosed herein improve cancellation of environmental noise and reduce perceptible adaptation artefacts.

The present disclosure addresses numerous challenges associated with general purpose adaptive noise cancellation systems, including unwanted noise amplification (e.g., due to constructive interference between the environmental noise and the anti-noise signal), noise cancellation performance during transient noise events, and reduction of audible artefacts produced during adaptation. The systems and methods disclosed herein provide robust, practical ANC solutions that generalize well to various listening devices and form-factors.

In various embodiments, systems and methods are disclosed to reduce noise amplification that occurs when there is constructive interference between noise and anti-noise within a frequency range. Adaptive methods are disclosed which include defining a composite error signal that incorporates a noise-shaping filter and deriving a new weight update rule for controlling the adaptation. The solutions disclosed herein are adaptive, computationally inexpensive, and may be implemented as an improvement to conventional adaptive frameworks.

In various embodiments, systems and methods disclosed herein reduce adaptation artefacts that may be perceived by a listener. For example, low sound pressure level (SPL) artefacts may be present due to the proximity of the anti-noise source to the listener's ear drum. It is further recognized that some artefacts are caused by wideband fluctuations in the magnitude and phase response of the anti-noise path. Improved adaptive systems and methods disclosed herein include an adaptive gain element in the anti-noise signal path to generate a robust error correcting signal.

In various embodiments, systems and methods disclosed herein provide improved robustness to transient noise events. Many intermittent and unexpected noise events (e.g., head/jaw movement that moves the microphones relative to the noise, closing a door, turbulence during air travel, etc.) produce low frequency transients that can potentially disrupt the adaptation loop, leaving unwanted residual noise or producing noise artefacts. In various embodiments, a transient activity detector (TAD) tracks transient behavior and controls adaptation during transient activity.

Example embodiments of adaptive noise cancelling systems of the present disclosure will now be described with reference to the figures. Referring to FIG. **1**, an adaptive noise cancelling system **100** includes an audio device, such as headphone **110**, and audio processing circuitry, such as digital signal processor (DSP) **120**, a digital to analog converter (DAC) **130**, an amplifier **132**, a reference microphone **140**, a loudspeaker **150**, an error microphone **162**, and other components.

In operation, a listener may hear external noise d (n) through the housing and components of the headphone **110**. To cancel the noise d(n), the reference microphone **140** senses the external noise, producing a reference signal x(n) which is fed through an analog-to-digital converter (ADC) **142** to the DSP **120**. The DSP **120** generates an anti-noise signal y(n), which is fed through the DAC **130** and the amplifier **132** to the loudspeaker **150** to generate anti-noise in a noise cancellation zone **160**. The noise d (n) will be cancelled in the noise cancellation zone **160** when the anti-noise is equal in magnitude and opposite in phase to the noise d (n) in the noise cancellation zone **160**. The resulting mixture of noise and anti-noise is captured by the error microphone **162** which generates an error signal e (n) to measure the effectiveness of the noise cancellation. The error signal e(n) is fed through ADC **164** to the DSP **120**, which adjusts the magnitude and phase of the anti-noise signal y(n) to minimize the error signal e(n) within the cancellation zone **162** (e.g., drive the error signal e(n) to zero). In some embodiments, the loudspeaker **150** may also generate desired audio (e.g., music) which is received by the error microphone **162** and removed from the error signal e (n) during processing. It will be appreciated that the embodiment of FIG. **1** is one example of an adaptive noise cancellation system and that the systems and methods disclosed herein may be implemented with other adaptive noise cancelling implementations that include a reference microphone and an error microphone.

FIG. **2** illustrates a robust, configurable adaptive noise cancelling system **200** that achieves improved noise cancellation performance, substantially free of audio artefacts. The system **200** senses environmental noise at an external microphone (e.g., microphone **140** of FIG. **1**) which produces an external noise signal, x(n). The environmental noise also passes through a noise path P(z), including the housing and components of the listening device, where it is received as d(n) at an error microphone (e.g., error microphone **162**). An adaptive filter **202** receives the external noise signal x(n) and estimates the noise path P(z) to produce an anti-noise signal y(n) for cancelling the noise signal d(n). The anti-noise signal y(n) is gain adjusted by adaptive gain control **204** and further modified by system **206** to account for the secondary path S(z) between the adaptive filter **202** and the error microphone.

The system **200** further includes an adaptation block **220**, which includes a noise amplification control (NAC) block **222** and an adaptive gain control block (ADG) **224**. In various embodiments, the NAC **222** is operable to minimize frequency dependent constructive interference, and the ADG **224** is operable to minimize wide-band fluctuations in the anti-noise path. The system **200** further includes a transient activity detector (TAD) **226**, which is operable to control the system **200** in response to sudden noise fluctuations and impulsive environmental events. The filters **208**, **210**, **212**, **228**, **230**, **232** provide additional filtering as described further herein with reference to FIGS. **3**-**5**.

Referring to FIG. **3**, embodiments of a noise amplification control (NAC) sub-system **300** will now be described. A goal of many adaptive noise cancellation systems is to estimate the noise at the ear drum of the listener. This is

often accomplished by using the noise measurements from the reference and error microphones, which are located a small distance from the ear drum. The estimated noise is then inverted into an anti-noise signal that destructively interferes with the actual noise leading to cancellation of the noise. The anti-noise signal is produced using a filter that adapts to estimate the amplitude and phase shift for each frequency to align the anti-noise with the noise. Depending on the latency and the physical transfer functions at issue, the destructive interference may be maintained in certain bandwidths, while constructive interference may be experienced beyond these bandwidths. This constructive interference may be perceived by the listener as a narrowband amplification of the ambient noise (e.g., a "hiss" sound). Reducing or eliminating the "hiss" sound without sacrificing the depth and bandwidth of cancellation is a challenge in many ANC product designs. In conventional, low power embedded systems (e.g., consumer headphones) reduction of hiss may be computationally prohibitive and hard to control and tune.

The NAC sub-system **300** of FIG. **3** provides an approach for controlling hiss and related sound artefacts that adaptively controls the noise amplification in hiss regions, while efficiently achieving cancellation in non-hiss regions. An NAC block **320** is configured to define a composite error signal that incorporates a noise-shaping filter C(z) (e.g., noise shaping block **308** and noise shaping block **310**) and derive new weight update rules for the adaptive filter **302**. In some embodiments, a least mean squares (LMS) framework may be used, including a composite error signal that incorporates the noise-shaping filter that is used to derive a new weight update rule.

In operation, the NAC block **320** updates the adaptive filter **302**, W(z), based on the error signal e(n) and a filtered version of the reference signal, x(n). In the illustrated embodiment, the NAC block **320** receives a signal x_1 (n) from filter **312**, $\hat{S}(z)$, and signal $x_2(n)$ from filter **308**, C(z). The cost function minimizes the mean square error: Minimize $E\{e^2(n)+\gamma E\{e_1^2(n)\}\}$. In various embodiments, the anti-noise signal is filtered using a noise-shaping filter C(z) (such as noise-shaping filter **308** and noise-shaping filter **310**) which may be configured to enhance signals in the hiss region. In some embodiments, the hiss region for a particular headset may be detected, and the noise-shaping filter C(z) may be tuned, in a test environment prior to distribution. In some embodiments, the hiss level may be detected during operation and the noise-shaping filter C(z) may be adaptively tuned during operation. The hiss level may be determined, for example, by comparing the error signal, e(n), to the noise signal to determine regions of constructive interference.

The cost function is adapted to minimize $E\{e^2(n)+\gamma E\{e_1^2(n)\}\}$ where E{.} is the expectation operator, γ is a constant that controls the aggressiveness, and $e_1(n)$ is noise-shaped anti-noise signal, y' (n). In some embodiments, a weight update rule is derived by the NAC **320** based on gradient methods. Embodiments of the method can be applied to filtered least mean squared approaches, adaptive feedback, adaptive hybrid approaches and other noise cancellation approaches. In various embodiments, the adaptation is controlled in a way that minimizes noise amplification by defining a cost function optimization and deriving an adaptive algorithm that can achieve it.

Referring to FIGS. **4**A and **4**B, embodiments of an adaptive gain (ADG) subsystem **400** are disclosed. In various embodiments, an adaptive gain control block **420** continuously updates a gain element **404** to adjust for variations in the various coupling paths. The inputs to the ADG are conditioned using a programmable filter $B_G(z)$ (e.g., programmable filter **408** and programmable filter **410**), which is designed to protect against low frequency transients and high frequencies distractors in the environment. In some embodiments, the filter $B_G(z)$ may comprise a low pass filter and/or a band pass filter that further filters out very low frequencies (e.g., <20 Hz that cannot be heard out of a loudspeaker).

It will be appreciated that the physical geometries and person-to-person fit variations of the headphone can affect noise cancellation performance. For example, the shape of the outer ear and length of the ear canal can alter the acoustic transfer functions of interest in an ANC application. In some embodiments, an ANC system in a headphone or other personal listening device (e.g., the system of FIG. **1**) uses a noise sensing reference microphone, an error microphone, and a DSP sub-system that generates the appropriate anti-noise to cancel the noise field as measured by the error microphone. This results in a cancellation zone where the degree of cancellation is maximized at the error microphone location and degrades inversely proportional to the wavelength. As a result, the cancellation performance at the eardrum (which is roughly 25 mm away from the error microphone) drops significantly for higher frequencies (lower wavelengths) leading to loss of cancellation bandwidth as perceived by the user of the noise cancelling system. The embodiments of FIGS. **4**A-B address these and other issues by maximizing the cancellation bandwidth at the eardrum during the tuning stage and formulating an adaptive approach that uses the error microphone to adapt to user specific characteristics during operation.

For the purposes of this disclosure, let the error microphone location be termed as ERP (Error Reference Point) and the ear-drum location be termed as DRP (Drum Reference Point). For ANC systems tuned at the DRP, the error microphone is a good indicator of low frequency cancellation at DRP and hence a robust error correcting signal can be derived from a low-passed version of the error microphone signal. This correcting signal may then be used to adapt a gain in the anti-noise signal path.

To maximize cancellation, an ideal placement of an error microphone would be at the eardrum, but that location is not practical for many consumer devices. Thus, the ERP is used to provide a practical signal that is roughly indicative of the cancellation performance at the DRP. The adaptive algorithm attempts to minimize the ERP signal which results in (i) diminished cancellation at high frequency signals at the DRP, and (ii) higher possibility of hiss sounding artefacts due to constructive interference of high frequencies at the DRP. In conventional approaches, adaptive algorithms are employed that use the transfer function from ERP to DRP. These approaches have many drawbacks including that the transfer function estimation is inaccurate at high frequencies, low estimation accuracy can affect the broad band cancellation performance and cause transitory hiss levels, high computational costs, and difficulty to tune and calibrate for all use conditions making deployment impractical for many devices. The embodiments of FIGS. **4**A-B provide a computationally inexpensive approach that overcomes many of the drawbacks of conventional systems, is easy to tune, for example by measuring certain transfer functions during system design, and is self-calibrating.

FIG. **4**A illustrates a calibration and tuning arrangement for the adaptive gain subsystem. In this arrangement, the ANC filter **402** is optimized to cancel noise at the DRP during an initial tuning stage. In one embodiment, the device

is placed on a head and torso simulator which has a second error microphone at the DRP. P_{E2D} (z), S_{E2D} (z) model the ERP to DRP transfer functions in the denoted acoustic paths. The system can then be optimized using least mean squares block **422** to perform ANC tuning to derive an optimum W_{DRP} (Z), based on the error signal, e' (n). Tuning in this manner helps achieve extended cancellation bandwidth and better performance in high frequency bands. Second, as illustrated in FIG. **4**B, the adaptive algorithm is set-up to continuously update a gain element **404**, G, that empowers the proposed approach to adjust for variations in the various coupling paths. In some embodiments, the signal is low pass filtered and gain adjusted for good low frequency cancellation. Third, the inputs to the adaptive algorithms are conditioned using a programmable filter, B_G (z), which is programmed such that the ERP signal can mimic the cancellation performance at DRP. Additionally, B_G (z), can be programmed to optimize performance during low frequency transients and high frequency distractors in the environment.

It will be appreciated that the embodiments of FIGS. **4**A-B are example implementations, and that the approaches disclosed therein can be modified for adaptive versions of feedback, feedforward and hybrid ANC solutions. In some embodiments, instead of adapting a gain element, a purposefully constrained filter element can be adapted. The computed gain can have an additional non-linear processing to further increase the robustness.

Referring to FIG. **5**, embodiments of a transient activity detector (TAD) **500** are illustrated. In operation, the TAD **500** detects changes in the sound environment and causes an update process to be temporarily halted when sudden/intermittent noise activity is detected. As a result, the unwanted adaptation artefacts in the anti-noise signal (e.g., artefacts that might result from rapid adaptation) are minimized. Examples of transient events might include talking by the headset wearer, honking car horns, head movements, and other similar sound events. A separate set of TAD calculations may be performed on the inputs from each microphone in an ANC system (e.g., a total of 4 microphones in a headset including left error microphone, left outside microphone, right error microphone, right outside microphone). Each of the four microphones may be enabled or disabled independently.

An embodiment of transient activity detection processing for a microphone is illustrated in FIG. **5**. A detection state machine **514** is used to assert and de-assert the "detect" output. In various embodiments, the detect output will be asserted when the smoothed instantaneous magnitude (output A from the LPF **506**) is greater than the scaled average noise magnitude (C in disclosure). After the smoothed instantaneous magnitude A falls below the scaled average noise magnitude C, a release delay counter will cause the detect output to persist for a programmable period of time before being de-asserted.

In the illustrated embodiment, audio samples **502** from a microphone (e.g., reference microphone or error microphone) are received and fed through an absolute value block **504** followed by a low pass filter **506** to generate the smoothed instantaneous magnitude A. In one embodiment, the output A comprises an average magnitude of the audio samples **502** over a certain period of time and is representative of an instantaneous noise value. The value A is provided to a detect state machine **514**, and to a low pass filter **508** with saturation which has an output B representing an average of the A values over a second period of time (i.e., average noise magnitude). A programmable scale factor defines a threshold for detecting transients (e.g., 5 times the average noise magnitude) and is multiplied at component **516** by the average noise magnitude to produce a second input C to the detect state machine **514**.

In one embodiment, if the smoothed instantaneous noise magnitude A is greater than the scaled average noise magnitude C, then the detect state machine **514** is operable to instruct the adaptation processing (e.g., adaptation block **220** of FIG. **2**) to stop. In various embodiments, the adaptation will freeze until the instantaneous noise magnitude A is below the scaled average noise magnitude C. Referring to FIG. **2**, when the adaptation is stopped, filter **202** and gain adjust **204** will continue to modify the noise input x(n) using the most recent weights and gain values. In some embodiments, a programmable release delay counter is operable to maintain the detect output for a programmable period of time before being de-asserted. Further, attack and release component **512** is operable to control how quickly the low pass filter **508** rises and falls in response to the instantaneous noise magnitude A. A programmable attack time constant defines a time it takes for the average noise magnitude to rise when the instantaneous noise is greater than the average noise magnitude B. A programmable release time constant defines a time it takes for the average noise magnitude B to fall when the instantaneous noise magnitude A is lower than the average noise magnitude B.

The foregoing disclosure is not intended to limit the present disclosure to the precise forms or particular fields of use disclosed. As such, it is contemplated that various alternate embodiments and/or modifications to the present disclosure, whether explicitly described or implied herein, are possible in light of the disclosure. Having thus described embodiments of the present disclosure, persons of ordinary skill in the art will recognize that changes may be made in form and detail without departing from the scope of the present disclosure. Thus, the present disclosure is limited only by the claims.

What is claimed is:

1. An adaptive noise cancellation system comprising:

a reference sensor operable to sense environmental noise and generate a corresponding reference signal;

an error sensor operable to sense noise in a noise cancellation zone and generate a corresponding error signal;

a noise cancellation path comprising a noise cancellation filter and a variable gain component, the noise cancellation path operable to receive the reference signal and generate an anti-noise signal to cancel the environmental noise at an eardrum reference point;

an adaptation module operable to receive the reference signal and the error signal and adaptively adjust weights of the noise cancellation filter and/or the variable gain component;

wherein the adaptation module comprises an adaptive gain control block operable to update the variable gain component, and wherein the adaptation module is tuned to optimize noise cancellation at the eardrum reference point based on the error signal.

2. The adaptive noise cancellation system of claim **1**, wherein inputs to the adaptive gain control block are conditioned using programmable filters operable to protect against low frequency transients and/or high frequency noise.

3. The adaptive noise cancellation system of claim **2**, wherein the programmable filters comprise a low pass filter that filters out high frequencies determined to be in a range that creates constructive interference between the cancellation zone and the eardrum reference point.

4. The adaptive noise cancellation system of claim 2, wherein the programmable filters comprise a high pass filter that filters out low frequencies determined to be in a range that cannot be heard by a user of the noise cancellation system.

5. The adaptive noise cancellation of claim 1, wherein the adaptation module further comprises a noise amplification control module operable to adaptively control noise amplification in at least one hiss region of the anti-noise signal, while achieving cancellation in non-hiss regions of the anti-noise signal.

6. The adaptive noise cancellation system of claim 5, wherein the hiss region of the anti-noise signal is a frequency region in which constructive interference between the environmental noise and the anti-noise signal is detected.

7. The adaptive noise cancellation system of claim 1, further comprising a transient activity detection module operable to receive the reference signal, detect a transient noise event and selectively disable the adaptation module during the detected transient noise event.

8. The adaptive noise cancellation system of claim 1, wherein the noise cancellation filter is further operable to generate the anti-noise signal in accordance with stored filter coefficients; and wherein the adaptation module is further operable to modify the stored filter coefficients.

9. The adaptive noise cancellation system of claim 1, further comprising a loudspeaker operable to receive the anti-noise signal and generate anti-noise to cancel the noise in the noise cancellation zone.

10. A method comprising:

receiving a reference signal from a first sensor, the reference signal representing external noise;

processing the reference signal through a noise cancellation path comprising a noise cancellation filter and a variable gain component, to generate an anti-noise signal;

receiving an error signal from a second sensor, the error signal representing noise in a noise cancellation zone;

adaptively adjusting the noise cancellation filter in response to the reference signal, the error signal and an adaptive gain control process to cancel the external noise at an eardrum reference point; and

tuning the noise cancellation path to optimize noise cancellation at the eardrum reference point based on the error signal.

11. The method of claim 10, further comprising conditioning inputs to the adaptive gain control process using programmable filters to protect against low frequency transients and/or high frequency noise.

12. The method of claim 11, wherein the conditioning further comprises low pass filtering out high frequencies determined to be in a range that creates constructive interference between the cancellation zone and the eardrum reference point.

13. The method of claim 11, wherein the conditioning further comprises high pass filtering out low frequencies determined to be in a range that cannot be heard by a user.

14. The method of claim 10, further comprising a noise amplification control process comprising adaptively controlling noise amplification in at least one hiss region of the anti-noise signal, while achieving cancellation in non-hiss regions of the anti-noise signal.

15. The method of claim 14, wherein the hiss region of the anti-noise signal includes is a frequency region in which constructive interference between the external noise and the anti-noise signal is detected.

16. The method of claim 10, further comprising a transient activity detection process comprising receiving the reference signal, detecting a transient noise event and selectively disabling adaptively adjusting the noise cancellation filter during the detected transient noise event.

17. The method of claim 10, further comprising generating the anti-noise signal in accordance with stored filter coefficients; and adaptively modifying the stored filter coefficients during operation.

18. The method of claim 10, further comprising outputting the anti-noise signal to a loudspeaker to generate anti-noise to cancel the noise in the noise cancellation zone.

* * * * *