Oct. 2, 1956 P. M. ROTHWELL 2,764,961

INTAKE MANIFOLD STRUCTURE

Filed July 23, 1954 4 Sheets-Sheet 1

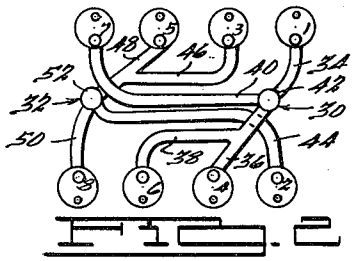

FIG. 2A.

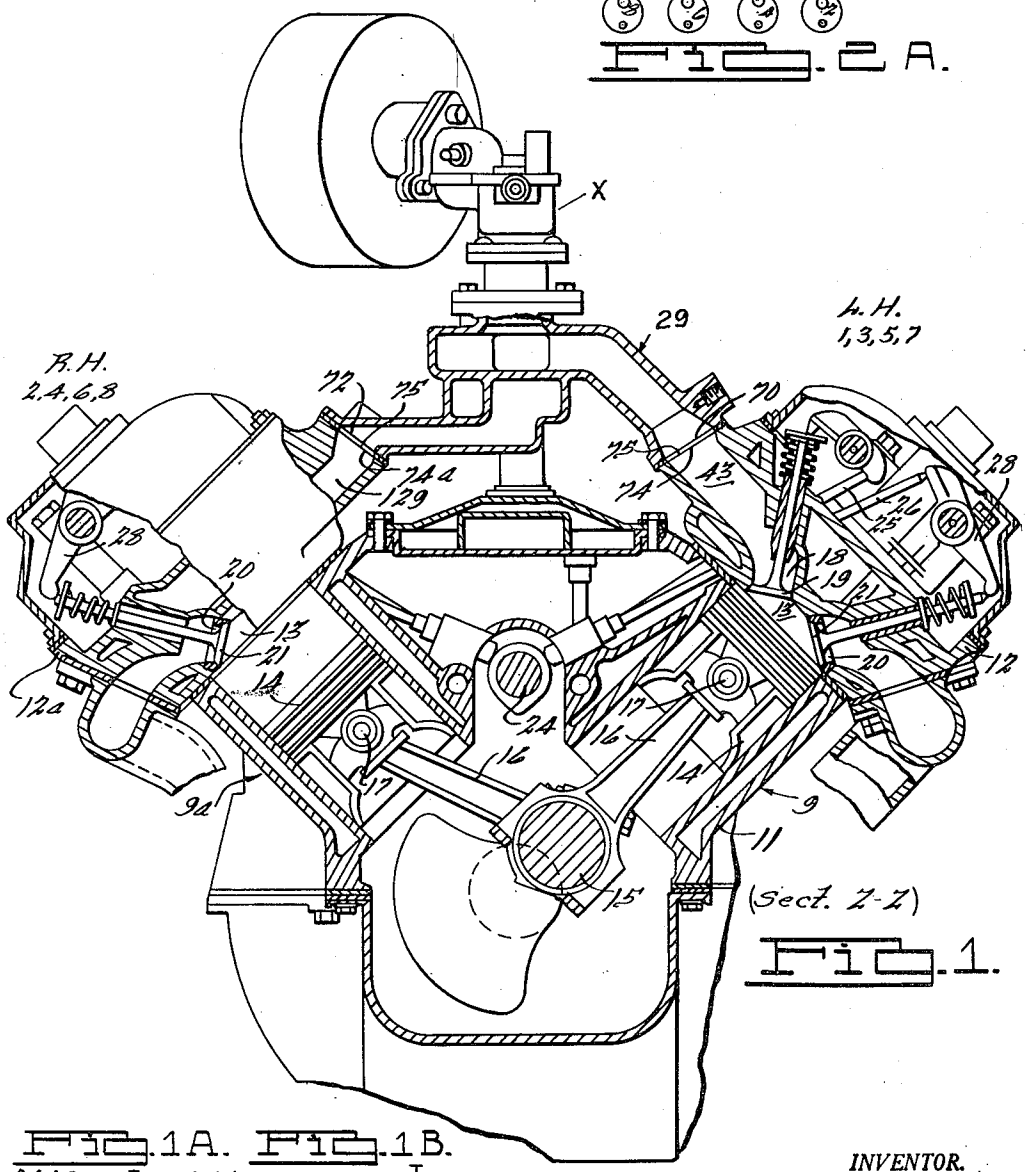

(Sect. Z-Z)

FIG. 1.

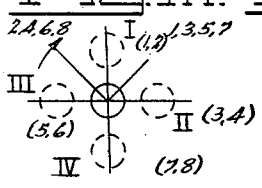

FIG. 1A.

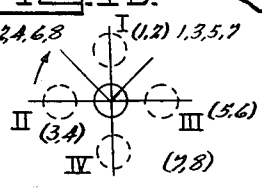

FIG. 1B.

INVENTOR.
Philip M. Rothwell
BY
Harness & Harris
ATTORNEYS.

Oct. 2, 1956 P. M. ROTHWELL 2,764,961

INTAKE MANIFOLD STRUCTURE

Filed July 23, 1954 4 Sheets-Sheet 2

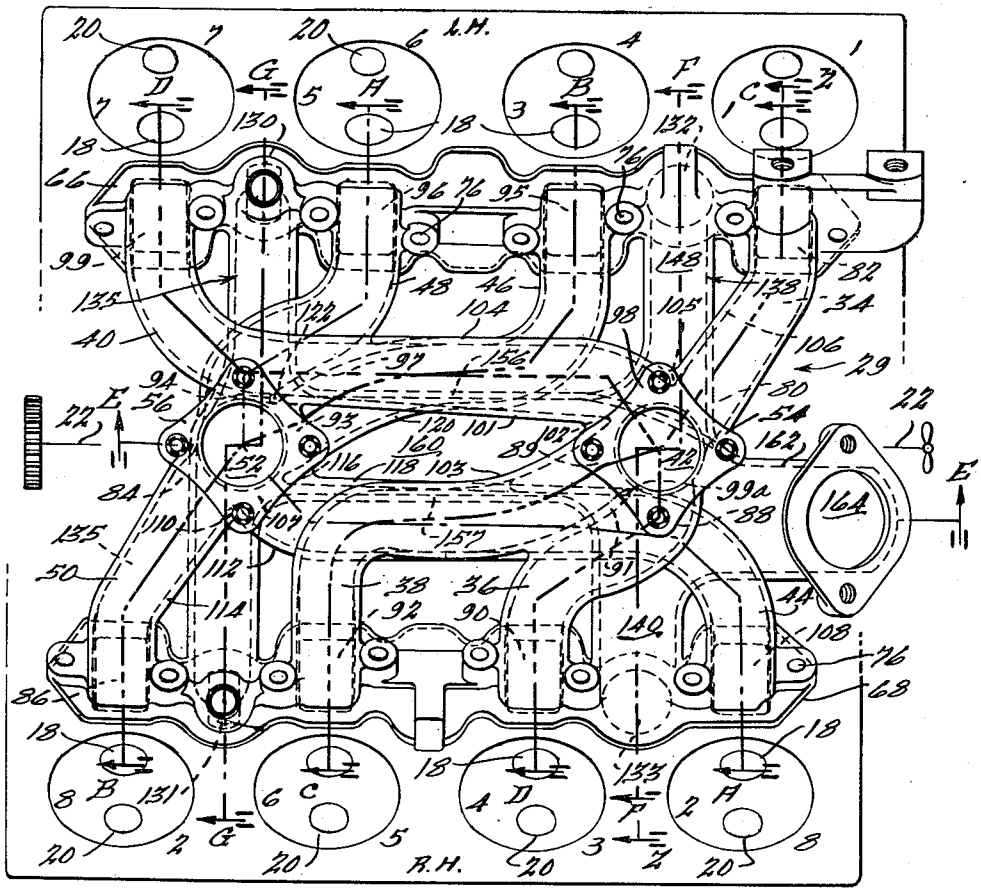

FIG. 2.

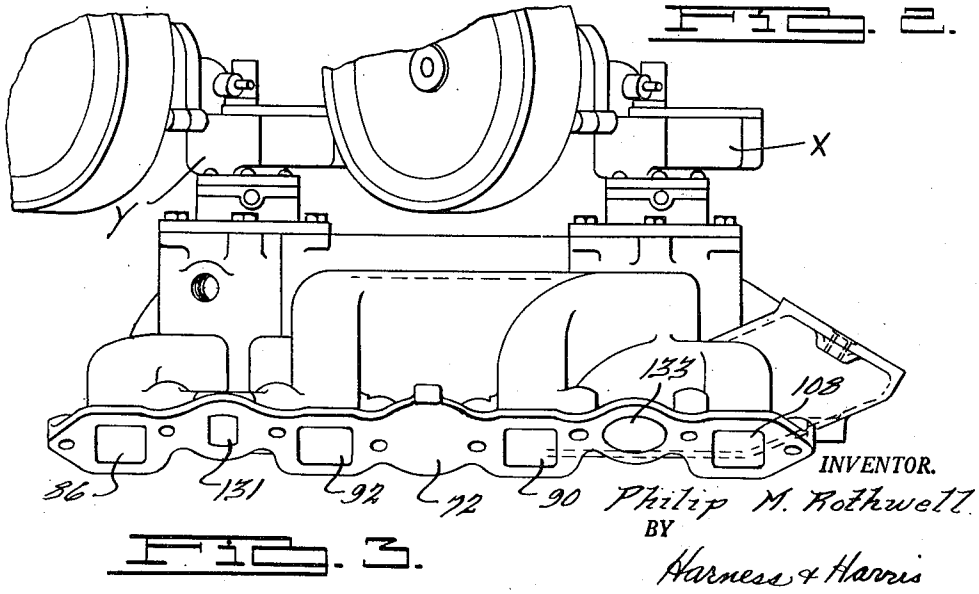

FIG. 3.

INVENTOR.
Philip M. Rothwell
BY
Harness & Harris
ATTORNEYS

Oct. 2, 1956 P. M. ROTHWELL 2,764,961

INTAKE MANIFOLD STRUCTURE

Filed July 23, 1954 4 Sheets-Sheet 3

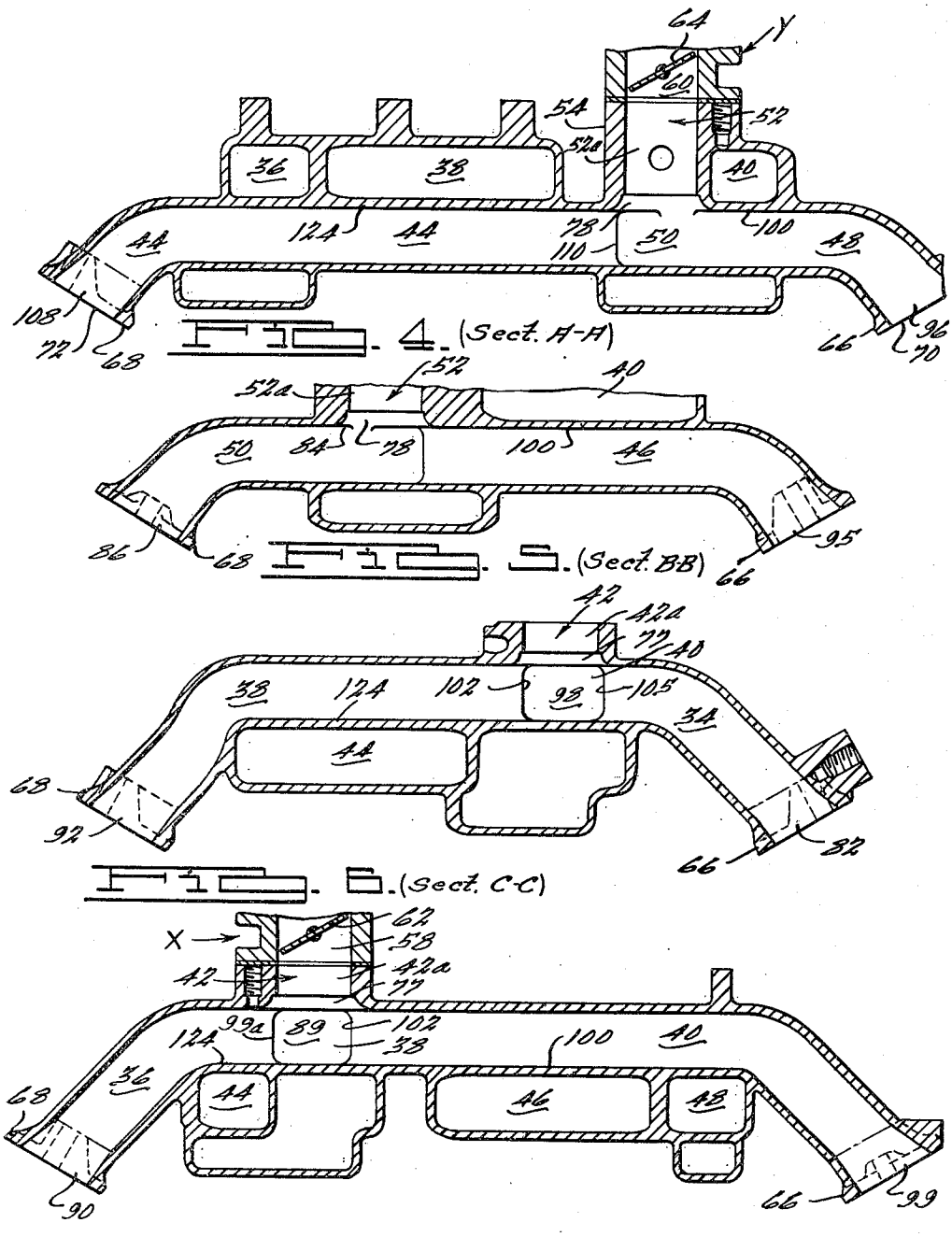

FIG. 4. (Sect. A-A)

FIG. 5. (Sect. BB)

FIG. 6. (Sect. C-C)

FIG. 7. (Sect. D-D)

INVENTOR.
Philip M. Rothwell
BY
Harness & Harris
ATTORNEYS.

Oct. 2, 1956 P. M. ROTHWELL 2,764,961

INTAKE MANIFOLD STRUCTURE

Filed July 23, 1954 4 Sheets-Sheet 4

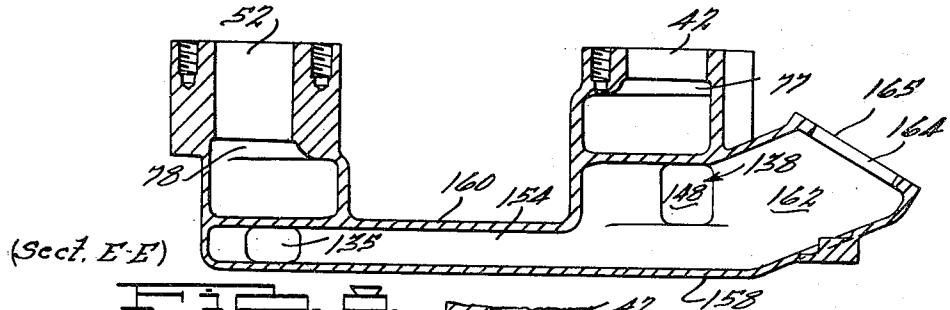

(Sect. E-E)

Fig. 8.

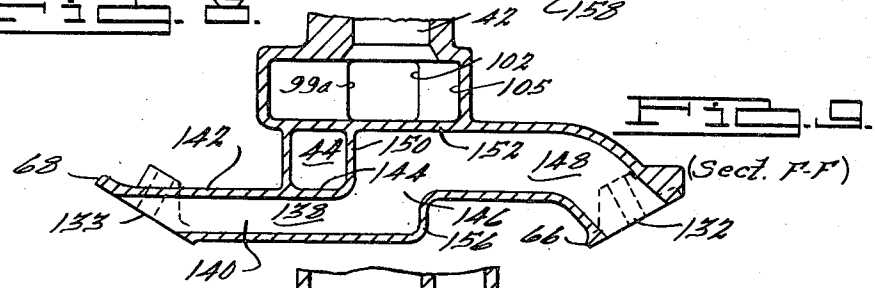

Fig. 9. (Sect. F-F)

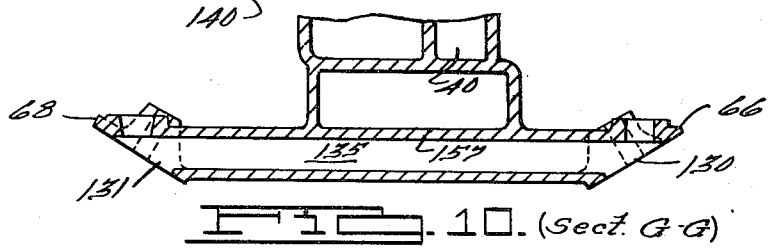

Fig. 10. (Sect. G-G)

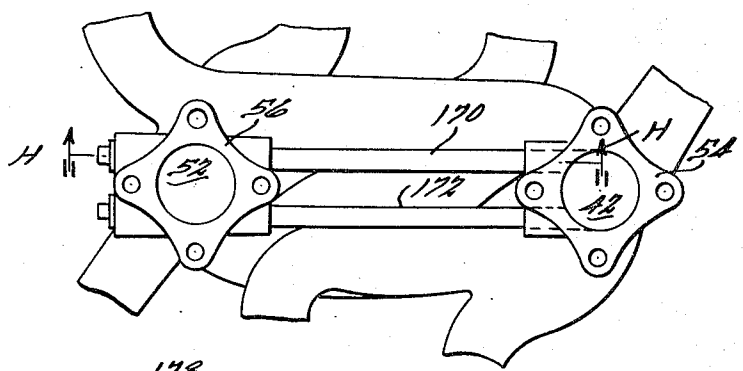

Fig. 11.

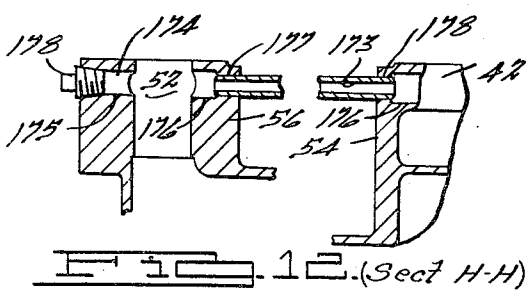

Fig. 12. (Sect H-H)

INVENTOR.
Philip M. Rothwell
BY
Harness & Harris
ATTORNEYS.

United States Patent Office

2,764,961

Patented Oct. 2, 1956

2,764,961

INTAKE MANIFOLD STRUCTURE

Philip M. Rothwell, Detroit, Mich., assignor to Chrysler Corporation, Highland Park, Mich., a corporation of Delaware

Application July 23, 1954, Serial No. 445,225

15 Claims. (Cl. 123—52)

This invention relates to intake manifold structures for engines of the type having a pair of cylinder banks arranged at an angle to each other and especially for V engines.

My invention has particular application to improved intake manifolding for V–8 engines wherein two inner cylinders of one bank of the engine and two outer or end cylinders of the other bank of the engine are fed from a common supply of air fuel mixture.

It has heretofore been proposed in V–8 engines of the foregoing type to feed the engine from one dual barrel carburetor, each barrel of which feeds four cylinders. Although good performance is thereby possible, it is desirable in certain installations such as for truck or industrial use to obtain optimum mid-speed torque and I have discovered that improvement in this feature of the engine performance is feasible while also providing greater air fuel capacity for the engine by a manifold having a novel arrangement of passages and which employs two simple, inexpensive, single barrel carburetors and in the widest possible spacing, such that the use of large air cleaners becomes possible.

The use of two individual carburetors is advantageous since the barrels of a dual carburetor even if of the same size are interconnected part way, i. e. in the sense that they employ one air cleaner and one air horn and I find that the effective air-fuel capacity is not as great as that obtained by the use of two single carburetors. In fact even if the air capacity of the total system at high speed (volumetric efficiency) were as a practical matter the same in the case of the dual or two single carburetors or greater in the case of the dual I find that mid-speed torque will be greater in the case of the two single carburetors.

I have further discovered that although the wide spacing of the individual carburetors produces a wide variation in conduit lengths from the carburetor riser to the cylinders, such does not adversely affect power output or air-fuel distribution in the mid-speed range in which the engine must do its principal work in the case of trucks or industrial use and good performance with a good F/A ratio of about .080 in all cylinders is obtainable. This is believed due in part to a satisfactory pulsating flow set up in the conduits and the frequency of which at the engine speeds 600–4000 R. P. M. and especially in the mid-speed range of 2000–3200 R. P. M., in which peak torque output is desired, is not adversely affected by the different pipe lengths of the branches and in part to the fact that my air-fuel conduits directly connect with the manifold intake risers to provide better distribution control than where the cylinders must be fed off side branches.

The principal object of my invention is therefore to provide engines of the foregoing type with an intake manifold system providing good mid-speed torque output.

Still another object is to provide engines of the foregoing type with an intake manifold system providing optimum torque in the speed range of 2000–3200 R. P. M.

A further object is to provide an engine of the foregoing type with an intake manifold system utilizing a pair of spaced single barrel carburetors and whose firing order provides the widest possible separation between suction impulses on the two carburetors.

A further object is to provide such engines with an intake manifold system using a pair of single barrel carburetors arranged with the widest possible spacing and utilizing large air cleaners.

In working with the manifold of my invention, I have found that due to use of a simple form of carburetor that there is tendency for some cylinders to over enrich at certain low speeds, for instance, 1600 R. P. M. possibly due to high pulsations, and such tends to foul up plugs. I have found that this condition may be controlled at the expense of some torque output reduction by the use of special carburetion. However, this is expensive. I have found that the condition may preferably be controlled by the use of conduit-type metering means between the manifold intake risers to damp out high pulsations and thereby prevent over enrichment. The metering control means may be constituted of a single or plurality of conduits whose total area is somewhat critical in that if too large, the value of a firing order producing a wide separation in suction impulses may be somewhat lost with consequent loss of torque. No fixed formula for this area appears possible and hence it is recommended that several sizes be tried to find that which provides the best mixture control and best torque. In general an area of less than ½ sq. in. is preferred. An area of 0.3 sq. in. appears satisfactory for a 331 cu. in. V–8 engine using standard single barrel carburetors, for instance Ball & Ball BBS975S carburetors.

Hence a further object is to provide a manifold system as aforesaid wherein pulsation damping or mixture metering control means are provided between the intake riser passages of the manifold.

I have further discovered that with a manifold such as I employ, heating of the intake riser passages for normal operation may advantageously be provided by water heating. In the present manifold it is simpler to provide than exhaust gas heating and is practical in the case of truck engines or industrial use because in these operations the operator can take more time for warm up. Moreover, water taps are readily available in the cylinder heads. Furthermore, by using water heating the refrigeration effect of the air fuel mixture on the water is obtained and this thereby reduces the heat rejection of the coolant water necessary at the radiator.

Hence still another object of my invention is to provide an intake manifold system as aforesaid in which the intake riser passages are water heated for normal operation and for reducing the heat rejection of the coolant system at the radiator.

Other objects and advantages of my invention will be more apparent from the following description of a preferred embodiment of my invention as applied to a 331 cu. in. V–8 engine, reference being had to the accompanying drawings in which:

Figure 1 is an end elevational view partly in section of an 8-cylinder V-type overhead valve engine embodying the intake manifold system of my invention, the section through the manifold being taken approximately at Z—Z of Figure 2;

Figures 1A and 1B are schematic views of the two preferred two plane 90° crank pin arrangements for an 8-cylinder V engine utilizing my invention, the Roman numerals in the figures indicating the positioning of the crank throws counting from the front or fan end of the engine and the numerals in the brackets indicating cylinder numbers whose pistons are connected with the engine throw;

Figure 2 is a plan view of the manifold of my inven-

tion and schematically showing the banks of cylinders in relation thereto;

Figure 2A is a schematic showing of the air-fuel passages of the manifold of Figure 2;

Figure 3 is a side elevational view of the manifold of Figure 2 showing the carburetors and air cleaners in position thereon;

Figure 4 is a sectional development taken in elevation at A—A of Figure 2 through a pair of conduits connecting with one manifold riser passage and showing a portion of the throttle passage of a carburetor feeding the same;

Figure 5 is a sectional development taken in elevation at B—B of Figure 2 through a second pair of conduits connecting with the same riser;

Figure 6 is a sectional development taken in elevation at C—C of Figure 2 through a pair of conduits connecting with the other manifold riser;

Figure 7 is a sectional development taken in elevation at D—D of Figure 2 through a second pair of conduits connecting with the same riser passage as the conduits of Figure 6 and showing the throttle passage portion of the carburetor feeding the same;

Figure 8 is a sectional elevation taken at E—E of Figure 2 through the riser passages and longitudinal water heating conduit;

Figure 9 is a sectional elevation taken at F—F of Figure 2 through one transverse water heating passage;

Figure 10 is a sectional elevation taken at G—G of Figure 2 through a second transverse water heating passage;

Figure 11 is a plan view of a portion of the manifold of Figure 2 showing a modification providing metering means between the carburetor riser passages; and

Figure 12 is a sectional elevation of portions of the riser passages of the manifold of Figure 11 taken at H—H thereof showing the manner of providing metering means therebetween.

Referring now to the drawings wherein similar numerals are used to designate similar parts of the manifold structure and system of my invention, I have illustrated my invention as applied to a 331 cu. in. 90° V-8 engine of current manufacture having a so-called two-plane 90° crankshaft, hemispherical combustion chambers and provided with downdraft carburetion of the single barrel type, each carburetor being arranged to feed a pair of inner cylinder of one bank and a pair of outer or end cylinders of the opposite bank. It will be understood that my invention is applicable to other engines of the type having opposite banks of cylinders and having a greater or lesser number of cylinders. Also the carburetion may be of the downdraft, updraft, horizontal or injection character.

As seen in the drawings, especially Figures 1 and 2, the engine has two banks **9** and **9***a* of cylinders **10**, four in each bank, arranged at 90° in a cylinder block **11**, to which cylinder heads **12** and **12***a* are secured and provided with hemispherical type combustion chambers **13** immediately above each cylinder **10**. The cylinders of each bank are aligned longitudinally of the axis of the engine and the cylinders of the opposite banks are offset longitudinally relative to each other.

For convenient reference, the cylinders of the left-hand cylinder bank, which is to the left looking forward from the flywheel end of the engine are numbered 1, 3, 5, and 7 respectively, starting such numbering at the fan end of the engine, and those of the right-hand cylinder bank are numbered 2, 4, 6, and 8 respectively, these numbers appearing internally of the cylinder representations in Figure 2.

Each cylinder is provided with a piston **14** reciprocable therein and operably connected to a crankshaft **15** through a connecting rod **16** and wrist pin **17**. Crankshaft **15** may be of any of the conventional types but preferably as seen in Figures 1A and 1B is an inherently balanced shaft, for example, a 90° two-plane crankshaft wherein the double crank throws identified by the Roman numerals I, II, III, and IV are arranged 90° apart, with throws I and II being respectively opposite throws IV and III. Throw No. I of Figures 1A and 1B connects with the pistons of cylinders 1 and 2, throw II with the pistons of cylinders 3 and 4, throw No. III with the pistons of cylinders 5 and 6, and throw No. IV with the pistons of cylinders 7 and 8. In Figure 1A it will be seen that throw No. III will follow throw No. I by 90° of crank rotation counting clockwise in that figure and by interchanging throws II and III as in Figure 1B, throw No. II may be arranged 90° of clockwise rotation from throw No. I.

Various firing orders are possible for the two described crank arrangements while affording preferred feeding intervals in the intake manifold of Figure 2. For example, the following firing orders:

1–5–7–3–6–8–4–2
1–5–4–3–6–8–7–2
1–8–7–3–6–5–4–2
1–8–4–3–6–5–7–2
1–8–4–2–6–5–7–3
1–8–7–2–6–5–4–3
1–5–4–2–6–8–7–3
1–5–7–2–6–8–4–3

may be used with the crank of Figure 1A and firing orders such as:

1–3–7–5–4–8–6–2
1–3–6–5–4–8–7–2
1–8–7–5–4–3–6–2
1–8–6–5–4–3–7–2
1–8–6–2–4–3–7–5
1–8–7–2–4–3–6–5
1–3–6–2–4–8–7–5
1–3–7–2–4–8–6–5

may be used with the crank arrangement of Figure 1B.

In Figure 2 my invention has been shown as applied to an engine having a crank arrangement of Figure 1A and preferred firing order of 1–8–4–3–6–5–7–2. The firing sequence is designated by the numerals just outside the ellipses in this figure designating cylinders. In this structure it will be apparent that the suction strokes of cylinders 1 and 6 are 360° out of phase, i. e. the cylinder 6 is beginning its suction stroke as the cylinder 1 starts its power stroke. This is also true of the pairs of cylinders 8, 5; 4, 7 and 3, 2.

The hemispherical combustion chambers **13** of the cylinders **10** are by preference each provided with a single inlet opening or port **18** closed by an inlet valve **19** and with a single smaller exhaust outlet or port **20** closed by an exhaust valve **21**, these valves being arranged transversely of the longitudinal axis **22** of the engine and at a substantial angle, for instance, 60° to each other, and preferably on a great arc of the spherical segment forming the combustion chamber **13**. As seen in Figure 2, all of the inlet openings **18** are in longitudinal alignment and all of the exhaust openings **20** are similarly arranged.

The inlet and exhaust valves of both banks of the engine are operable from a single camshaft **24** located above the crankshaft **15**, the camshaft actuating suitable tappet mechanism associated with the push rods **25** and **26** of the inlet and exhaust valve mechanisms respectively which in turn actuate respectively the inlet valve rocker arms **27** and exhaust valve rocker arms **28**, these rocker arms actuating in turn the normally spring-held closed valves **19** and **21**.

By preference, the camshaft **24** is usually arranged to open the respective inlet valves **19** before top dead center position of the piston and to close the exhaust valves after top dead center position of the piston so as to maintain the intake valve open during a substantial portion of crank rotation and to maintain the exhaust valve open

long enough to obtain an overlap between opening of the inlet valve and closing of the exhaust valve of each cylinder.

The intake or induction manifold of my invention generally referred to by the numeral **29**, comprises an integral structure having two systems of conduits or passages indicated diagrammatically and generally in Figure 2A by the reference numerals **30**, **32**. The system **30** comprises four air-fuel passages or conduits generally referred to by the numerals **34**, **36**, **38**, and **40** communicating at one end with a manifold intake or riser passage **42** fed by the single barrel riser or the carburetor "X" (see Figure 3) and preferably located on the longitudinal axis **22** of the manifold and approximately on a transverse line midway the cylinders 1 and 4 and communicating at the opposite ends with the intake passages **43** leading to the intake ports **18** for the cylinders 1, 4, 6, and 7 respectively. The system **32** comprises four air-fuel passages or conduits generally referred to by the numerals **44**, **46**, **48**, and **50** communicating at one end with a manifold intake or riser passage **52** fed by the single barrel of the carburetor "Y," preferably located on the longitudinal axis **22** and approximately on a transverse line midway the cylinders 5 and 8 and communicating at the opposite ends with the intake passages **43** leading to the intake ports **18** for the cylinders 2, 3, 5, and 8.

As seen in Figures 2 to 10, the carburetors "X" and "Y" are mounted on raised pads or bases **54**, **56** respectively of the manifold, defining the riser passages **42**, **52**, the latter being in vertical alignment with the barrels **58**, **60** respectively, of the carburetors "X" and "Y" from which gas or air-fuel mixture may be delivered to the risers **42**, **52** under control of bladed throttle members **62**, **64** located in the barrels **58**, **60** respectively, and adapted to assume any condition from fully open to fully closed throttle. These throttle members may be controlled in any suitable manner preferably conjointly.

The pads **54**, **56** are carried by the air-fuel conduits aforesaid, these in turn connecting with longitudinally extending manifold mounting portions or flanges **66**, **68** provided with inclined finished under faces **70**, **72** which are downwardly converging and which coincide with mounting faces **74**, **74***a* of the cylinder heads **12**, **12***a* when seating the manifold. It will be noted that these flanges are somewhat longitudinally offset with respect to each other and symmetrically arranged relative to the risers **42**, **52**.

The manifold **29** is secured in position on the cylinder heads **12**, **12***a* with intervening gaskets **75** by bolts (not shown) which pass through the mounting holes **76** of the flanges into threaded holes (not shown) of the cylinder heads.

As seen in Figure 8, the riser passage **42** for the carburetor X is shorter than the riser passage **52** for the carburetor Y. The riser **42** comprises a cylindrical portion **42***a* and an enlarged base portion forming a distribution chamber **77** into which the conduits **34**, **36**, **38**, and **40** open. The riser passage **52** comprises a similar but somewhat longer cylindrical portion **52***a* and a base portion forming a chamber **78** into which the conduits **44**, **46**, **48** and **50** open in a lower plane or level than the conduits of the riser **42** open into the chamber **77**. Moreover, it will be observed from Figures 2–10 that the air-fuel conduits of my invention on one side of the axis **22** are when viewed in plan symmetrical with those on the opposite side, that each is preferably of generally rectangular section; that no two on either side are of the same length; and that each conduit is of a lengthwise contour providing a smooth passage for air-fuel mixture from the manifold riser passages to the intake passages of the cylinder heads.

Thus the conduit **34** extends in a generally straight path from its entrance opening **80** in the chamber **77** of the riser **42** to adjacent the mounting flange **66** where it curves smoothly toward the cylinder No. 1 approaching

the latter on a line normal to the axis **22** and terminating in an opening **82** in the flange **66** coinciding with the entrance of the intake passage **43** for cylinder No. 1. In a similar but opposite manner and starting at a somewhat lower level the conduit **50** extends from its entrance opening **84** in the chamber **78** of the riser **52** and terminates in an opening **86** in the flange **68** coinciding with the entrance opening of the intake passage **43** of cylinder No. 8. It will be observed, however, by reference to Figures 5 and 6, for example, that the passage **50** where it extends from its riser **52** and for some distance prior to meeting the intake passage **43** at its outlet **86** is at a lower level than the conduit **34** where the latter extends from the riser **42**, chamber **77**. This facilitates pyramiding or stacking of certain conduits or passages, and in this connection, the passages **34**, **36**, **38**, and **40** emanating from the chamber **77** of the riser **42** may be termed the upper level air-fuel passages, these being in the uppermost conduit plane of the manifold, whereas the passages **44**, **46**, **48**, and **50** emanating from the chamber **78** of the riser **52** may be termed the lower level air-fuel passages, these being in the intermediate conduit plane of the manifold.

The upper level passages **36**, **38** are in juxtaposition to each other where they emanate from the chamber **77** of the riser **42** and have adjacent rectangular entrance openings **88**, **89** respectively. The conduit **36** as seen in Figure 2 is of a generally reverse curve shape. It extends obliquely from the riser **42** until past the conduit **44** and then dips down as seen in Figure 7 and terminates in an opening **90** coinciding with the entrance of the intake passage **43** of cylinder No. 4. The conduit **38** extends alongside the conduit **36** and over the conduit **44**. It has a common vertical wall **91** with the conduit **36** until these conduits separate and diverge from each other at the point where the conduit **36** turns outwardly on a line normal to the axis **22** to meet the intake passage of cylinder No. 4. The conduit **38** continues on a line substantially parallel to the axis **22** and then turns outwardly generally normal to the axis **22** when abreast cylinder No. 6 and turns downwardly as seen in Figure 6 to terminate in an opening **92** coinciding with the entrance of the intake passage **43** for cylinder No. 6.

The conduits **46**, **48** extend between their risers **52** and mounting in a flange manner similar to that which the conduits **36**, **38** extend between the chamber **78** of the riser **52** and mounting flange **66** but in an opposite direction and at the lower air-fuel passage level aforesaid, they being below the air-fuel passage **40**. These conduits **46**, **48** have juxtaposed entrance openings **93**, **94** in the chamber **77** of the riser **52** and terminal openings **95**, **96** respectively in the flange **66** where they coincide with the entrances of the intake passages **43** for cylinders Nos. 3 and 5 respectively. As in the case of the conduits **36**, **38** the conduits **46**, **48** have a common vertical wall **97** extending a portion of their length from the riser **52**.

The conduit **40** extends at the upper air-fuel level from its entrance opening **98** in the chamber **77** of the riser **42** along a path generally paralleling the axis **22** and over the conduit **46** crossing the conduit **48** and curving outwardly when past intermediate cylinders **5** and **7** and downwardly when past the conduit **48** to terminate in an opening **99** coinciding with the intake passage **43** for cylinder No. 7.

It will be observed that the entrance opening **98** of the conduit **40** is juxtaposed the entrances **80** and **89** of the conduits **34** and **38** respectively; and that the entrance openings **80**, **98**, **89**, and **88** are arranged one in juxtaposition to the next at the level of the chamber **77**. Moreover, as seen in Figure 7, for example, the upper level conduit **40** has a common horizontal wall **100** with the lower level air-fuel conduits **46** and **48** where it is immediately above the same. It will also be seen that the vertical wall **101** of the conduit **40** intersects at

102 with the vertical wall 103 of the conduit 38 to form a common vertical edge for the juxtaposed openings 98 and 89 of these conduits, that the vertical wall 104 of the conduit 40 intersects at 105 with the vertical wall 106 of the conduit 34 to define a common edge of the juxtaposed entrance openings 98 and 80 of these conduits and that the terminal end 99*a* of the common vertical wall 91 of the conduits 36, 38 provides a common edge for the juxtaposed entrance openings 88, 89 of these conduits in the chamber 77.

The lower level air-fuel conduit 44 extends between its chamber 78 of the riser 52 and its mounting flange 68 in the same manner to that in which the conduit 40 extends from its riser 42 but below the conduits 36, 38. It has an entrance opening 107 in the chamber 78 of the riser 52 and a terminal opening 108 in the flange 68 where it coincides with the intake passage 43 of cylinder No. 2.

The entrance openings 84, 107, 93, and 94 to the chamber 78 of riser passage 52 are at the same level and one juxtaposed the other. Thus the entrance 107 is juxtaposed the entrance 84 and has a common vertical edge 110 formed by the intersection of the vertical wall 112 of the conduit 44 with a vertical wall 114 of the conduit 50; the entrance 107 is also juxtaposed the entrance 93 and these have a common vertical edge 116 formed by intersection of the vertical wall 118 of the conduit 44 and the vertical wall 120 of conduit 46 and the entrance 93 of conduit 46 is juxtaposed the entrance 94 of conduit 48 and these have a common terminal edge 122 determined by their common vertical wall 97.

As seen in Figures 4 and 7, the lower level air-fuel conduit 44 crosses the upper conduit 36 and substantially coincides part way with the upper level conduit 38 so as to have in part a common horizontal wall 124 with the conduits 36, 38.

As previously noted, the manifold of this invention lends itself particularly to water heating of the carburetor riser hot spot and although exhaust gas heating may be used therefor, water heating is preferred since it avoids the need of a pair of exhaust gas crossover passages in the cylinder head of each bank. For the purpose of water heating the carburetor intake riser passages, I provide intermediate each of the end pairs of cylinders of each bank in the cylinder heads thereof, suitable water outlet passages 129 which conduct water to suitable passages to be described of the manifold 29 and provided adjacent the risers 42, 52 thereof and from which the water is returned to the radiator of the vehicle.

As seen in Figure 2 and Figures 8 to 10, water may enter the manifold structure 29 through openings 130 and 132 in the mounting flange 66 of the left hand cylinder bank and through openings 131 and 133 in the mounting flange 68 of the right hand cylinder bank. The openings 130, 131 communicate with a cross conduit or passage 135 of rectangular shape seen best in Figures 2 and 10 which passes immediately below and in joinder with the chamber 78. This passage 135 has a common horizontal wall 137 with the chamber 78 of the riser 52 by which to communicate heat to the passage riser. Since the air-fuel passages 44, 46, 48, and 50 emanate from the chamber 78 at the lower air-fuel passage level and the cross passage 135 must transverse these air-fuel passages, the level of the cross passage 135 is below that of these air-fuel passages 44, 46, 48, and 60 and may be designated the lowermost or bottom conduit plane of the manifold 29. Due to the offset between the cylinders of the opposite banks of the engine the cross passage 135 as seen in Figure 2, has its portions or branches on the opposite side of the axis 22 offset somewhat from each other. As also seen in Figure 2, the cross passage 135 extends intermediate the cylinders Nos. 5 and 7 of the left hand bank, and cylinders Nos. 6 and 8 of the right hand bank.

The second pair of water inlet apertures 132 and 133 are, as seen in Figure 2, located in the mounting flanges 66 and 68 respectively, intermediate the cylinders Nos. 1 and 3 of the left hand bank, and the cylinders Nos. 2 and 4 of the right hand bank. These apertures are connected by a cross passage 138 which, as seen in Figures 2 and 9 and by reference to Figure 10, extends transversely from the aperture 133 to just past the axis 22 of the manifold and at the same level as the water passage 135 extends across the manifold. This portion or branch of the water passage 138, identified by the numeral 140, has its top horizontal wall 142 in the same plane common with the bottom wall 144 of the conduit 44. Just past the conduit 44 the water passage 138 extends upwardly and then horizontally at the intermediate conduit level to connect the water inlet 132 of the left hand bank. The vertical portion 146 of the water passage has a vertical wall 150 common with a vertical wall of the conduit 44 and has a horizontal wall 152 common with the floor of the chamber 77 of the riser 42 by which to directly communicate heat thereto. Connecting the two cross water passages 135 and 138 is a central longitudinal water passage or chamber 154 in the plane of the passage 135 and which is defined by side walls 156 and 157 seen in Figure 2 and bottom wall 158, and a top wall 160 seen in Figure 8, the latter wall lying intermediate the longitudinally directed air-fuel passages 38, 40, 44, and 46 of Figure 2. Moreover as seen in Figures 2 and 8 the central chamber 154 and the cross water passage 138 are connected by a passage 162 which extends upwardly therefrom, it terminating in an outlet 164 having a mounting face 165 for receiving a water connection with the radiator. It will be evident that by the described water system, adequate heating will be conducted to the riser passages of the spaced carburetors.

As previously described, I have found it possible to control over-enrichment of certain cylinders during low speed operation by the use of metering means between the intake risers of the manifold whose effect is to damp out high pulsations. In Figures 11 and 12 I have shown one form of accomplishing this result and which comprises a pair of tubes 170, 172 extending between the bosses 54 and 56 of the manifold and opening into the riser passages 42, 52 so as to effect a limited communication or passage 173 between the risers. It will be evident from Figure 12 that I effect this result by providing a pair of tube-receiving stepped bores 174 entirely across the boss 56 and through one side of the boss 54. It will be observed that the portions 175, 176 of the bore 174 are somewhat larger than the remaining portions 177, 178 and larger than the tubes 170, 172. Such facilitates easy assembly of the tubes in the portions 177, 178 which support them. The portions 175 of the bores 174 are threaded at their outer end to receive plugs 178 after the tubes are assembled in position. A pair of tubes is preferred in order to obtain the lowest possible silhouette for the manifold structure. It will be understood, however, that a single tube may be employed if desired. In the present showing for a 331 cu. in. engine I have found that two tubes of 7/16 in. inside diameter give optimum results. The total cross-sectional area of the passages 173 of these tubes is 0.3 square inch.

As seen in Figures 1 and 3, the carburetors X and Y are preferably of the type utilizing side-type air cleaners which, as seen, are preferably positioned with their air intake faces at an angle to the horizontal axis 22 of the manifold and parallel to each other so as to make possible use of the largest air cleaner surface. It will be understood that concentric-type vertical air cleaners of standard construction may also be used if desired.

Some idea of the increase in midspeed torque possible with the novel manifold of my invention will be evident from the following comparison of two test runs at wide open throttle with a 331 cu. in. V-8 engine of the character described. Run No. D was made using a conventional manifold of the general type shown in the application of Carpentier et al., Serial No. 283,198, filed

April 19, 1952, and now Patent No. 2,686,506, granted August 17, 1954, and employing a conventional Carter W. C. D. 9315 dual barrel carburetor having 1 3/16" venturis, while run No. S employed the manifold of the subject invention employing two Ball and Ball E7T1 adjustable jet carburetors with conventional concentric air cleaners No. 919801, the carburetors having 1 11/32" venturis.

Speed	Run No. D		Run No. S	
	Torque (lb. ft.)	B. H. P.	Torque (lb. ft.)	B. H. P.
600	256.4	29.3	257.3	29.4
800	279.6	42.6	273.8	41.7
1,200	289.8	66.2	295.0	67.4
1,600	299.5	91.3	309.0	94.2
2,000	305.1	116.2	328.5	125.1
2,400	305.9	139.8	335.0	153.1
2,800	295.1	157.4	323.1	172.3
3,200	276.0	168.3	303.9	185.3
3,600	261.2	178.9	289.7	198.4
4,000	246.1	187.4	273.1	208.0
4,400	233.1	195.2	249.5	209.0

From this test data it will be apparent that the manifold of the subject invention produces a considerable increase in midspeed torque.

From the foregoing description of my invention it will be apparent that I have provided a novel manifold structure and system capable of providing optimum midspeed torque and particularly adapted for use for truck engines. It will be understood that various changes and modifications may be made in the novel features of my invention without departing from the intent and spirit thereof and all such changes and modifications as are embraced by the appended claims and equivalents thereof are to be included.

I claim:

1. An intake manifold for an engine having opposite cylinder banks each including a plurality of cylinders, said manifold comprising opposite longitudinally extending portions for mounting said manifold on said engine banks, an intermediate portion on which to support a pair of fuel supply means, and conduit means connecting said mounting portions and said intermediate portion, a pair of longitudinally wide spaced intake riser passages on said intermediate portion, one transversely adjacent an end cylinder of one bank, and the other transversely adjacent the end cylinder at the opposite end of the same bank, one of said pair of riser passages each fed by one of said pair of fuel supply means and the other of said pair of riser passages to be fed by the other of said pair of fuel supply means, a plurality of spaced apertures in said mounting portions arranged longitudinally thereof, there being one such aperture for each cylinder, and a plurality of air-fuel passages provided by said conduit means between said apertures and said risers, there being an independent passage directly connecting each aperture with a riser passage; half the number of passages connecting with one riser and half connecting with the other.

2. An intake manifold for an engine having opposite cylinder banks each including a cylinder head and a plurality of cylinders, said manifold comprising opposite longitudinally extending flange portions for mounting said manifold to said cylinder heads, an intermediate portion on which to support a pair of single barrel fuel supply means, and conduit means connecting said mounting portions and said intermediate portion, a pair of longitudinally wide spaced intake riser passages on said intermediate portion, one transversely adjacent an end cylinder of one bank and the other transversely adjacent the end cylinder at the opposite end of the same bank, one of said pair of riser passages each fed by one of said pair of fuel supply means and the other of said pair of riser passages to be fed by the other of said pair of fuel supply means, a plurality of spaced apertures in each of said mounting portions arranged longitudinally thereof one opposite each cylinder, and a plurality of air-fuel passages provided by said conduit means, each independently connecting an intake riser with a different aperture, there being one such passage for each aperture and half the number of said passages directly connecting only with one of said riser passages while the other half thereof directly connect only with the other of said riser passages.

3. An intake manifold for an engine having opposite cylinder banks each including a cylinder head and a plurality of cylinders, said manifold comprising opposite longitudinally extending flange portions for mounting said manifold to said cylinder heads, an intermediate portion on which to support a pair of single barrel fuel supply means, and conduit means connecting said mounting portions and said intermediate portion, a pair of longitudinally spaced intake riser passages on said intermediate portion, one transversely adjacent an end cylinder of one bank and the other transversely adjacent the end cylinder at the opposite end of the same bank, each riser passage including a distribution chamber at the lower end thereof, that of one riser being in a lower plane than the chamber of the other, a plurality of peripherally adjacent apertures in each of said chambers, a plurality of spaced apertures in each of said mounting portions arranged longitudinally thereof, one opposite each cylinder, and a plurality of air-fuel passages provided by said conduit means, each connecting a chamber aperture with a mounting aperture, no two of said passages connecting with the same apertures and half the number of said passages being associated with one riser chamber and the remainder with the other riser chamber.

4. An intake manifold as claimed in claim 3 wherein some of the air-fuel passages associated with each riser chamber connect with the apertures of the mounting portion of one bank and the remainder with apertures of the mounting portion of the other bank.

5. An intake manifold for an engine having opposite cylinder banks each including a cylinder head and four cylinders, the cylinders of one bank starting from one end of the engine being successively numbered for reference herein 1, 3, 5 and 7 and being respectively located substantially opposite to those cylinders in the other bank which starting from the same end of the engine are numbered 2, 4, 6 and 8, said manifold comprising opposite mounting portions for mounting said manifold to said bank, a pair of longitudinally spaced intermediate portions each containing an intake riser passage, one located intermediate cylinders 5 and 8 and the other intermediate cylinders 1 and 4, air-fuel conduit portions connecting said intermediate portions and said mounting portions, said conduit portions providing independent air-fuel passages between one riser passage and said mounting portions for feeding cylinders 1, 4, 6, and 7 and corresponding independent air-fuel passages between the other riser passage and said mounting portions for feeding cylinders 8, 5, 3, 2.

6. An intake manifold for an engine having opposite cylinder banks each including a cylinder head and four cylinders, the cylinders of one bank being successively numbered for reference herein 1, 3, 5, 7 and being respectively located substantially opposite to those cylinders successively numbered 2, 4, 6, 8 in the other bank, said manifold comprising opposite mounting portions for mounting said manifold to said banks, a pair of longitudinally spaced intermediate portions each containing an intake riser passage, one of said riser passages being located intermediate cylinders 5 and 8, and the other being located intermediate cylinders 1 and 4, conduit portions connecting said intermediate portions and said mounting portions, said conduit portions providing independent passages each having an independent inlet opening in one of said riser passages and an independent terminal opening in one of said mounting portions adjacent a cylinder of the bank mounting such mounting por-

tion, said terminal opening substantially coinciding with the inlet of the intake passage to this cylinder, some of said independent passages being between one of said riser passages and the said mounting portion terminal openings thereof adjacent cylinders 1, 4, 6, 7 and others corresponding thereto when viewed in plan being between the other riser passage and the said mounting portion terminal openings thereof adjacent cylinders 8, 5, 3, 2, the inlet openings for said passages in one riser being in a lower plane than those of the other riser passage, and one of said conduits defining a passage from one riser being in part immediately above a pair of conduits defining passages from the other riser and a portion of a further conduit defining a passage from said other riser corresponding to said passage defined by said one conduit being immediately below a pair of other conduits defining passages from said one riser corresponding to those defined by said first mentioned pair of conduits.

7. An intake manifold as claimed in claim 6 wherein each intake riser passage includes a distribution chamber and each conduit passage connects with its riser passage at said chamber.

8. An intake manifold as claimed in claim 6 wherein the inlet openings for the conduit passages for cylinders 1, 4, 6, and 7 are peripherally spaced around the riser passage with which these passages connect and are adjacent the lower end of said passage and wherein the inlet openings for the conduit passages for cylinders 8, 5, 3, 2 are similarly disposed with respect to the riser passage with which they connect.

9. An intake manifold as claimed in claim 5 wherein the inlet openings of the conduit passages connecting with each riser passage are adjacent each other and wherein the said conduit passages for the pairs of cylinders 3 and 5, and 4 and 6 respectively, have a common vertical wall terminating at the riser passage with which their inlet openings are associated.

10. An intake manifold for an engine having opposite cylinder banks each including a cylinder head and four cylinders, the cylinders of one bank starting from one end of the engine being successively numbered for reference herein 1, 3, 5, and 7 and being respectively located substantially opposite to those cylinders in the other bank which starting from the same end of the engine are numbered 2, 4, 6, and 8, said manifold comprising opposite mounting portions for mounting said manifold to said bank, a pair of longitudinally spaced intermediate portions each containing an intake riser passage, one located intermediate cylinders 5 and 8 and the other intermediate cylinders 1 and 4, air-fuel conduit portions connecting said intermediate portions and said mounting portions, said conduit portions providing independent air-fuel passages between one riser passage and said mounting portions for feeding cylinders 1, 4, 6, and 7 and corresponding independent air-fuel passages between the other riser passage and said mounting portions for feeding cylinders 8, 5, 3, 2, said risers each including a distribution chamber into which the air-fuel passages connecting with these risers open, said chambers being in different planes, and the air-fuel passages emanating therefrom being in different planes, certain of said passages from one chamber having longitudinally extending portions which are stacked with respect to other passages from the other chamber, a pair of water conduits defining water passages extending transversely between said mounting portions in planes below said riser passages each such conduit having an upper wall portion common with the lower wall of the riser passage which it traverses and a longitudinally extending water conduit interconnecting said transverse water conduits defining a water passage interconnecting said traverse water passages, the opposite ends of said transverse water passages being open and defining water inlets and one end of said longitudinal water passage being open and defining a water outlet.

11. A manifold as claimed in claim 10 wherein said water inlet is in a portion of said longitudinally extending water conduit that extends outwardly past one of said riser passages.

12. An intake manifold for an engine having opposite cylinder banks each including a plurality of cylinders, said manifold comprising opposite portions for mounting said manifold on said engine banks, an intermediate portion on which to support a pair of fuel supply means, conduit means connecting said mounting portions and said intermediate portion, a pair of longitudinally spaced intake riser passages on said intermediate portion for connecting with said fuel supply means, one of said riser passages being transversely adjacent an end cylinder of one bank and the other transversely adjacent the end cylinder at the opposite end of the same bank, said conduit means defining a plurality of air-fuel passages extending between said mounting portions and the risers of said intermediate portion, half the number of said passages connecting with one riser, and half connecting with the other riser, and metering control means interconnecting said riser passages.

13. An intake manifold for an engine having opposite cylinder banks each including a plurality of cylinders, said manifold comprising opposite portions for mounting said manifold on said engine banks, an intermediate portion on which to support a pair of fuel supply means, conduit means connecting said mounting portions and said intermediate portion, a pair of longitudinally spaced intake riser passages on said intermediate portion for connecting with said fuel supply means, one of said riser passages being transversely adjacent an end cylinder of one bank and the other transversely adjacent the end cylinder at the opposite end of the same bank, said conduit means defining a plurality of air-fuel passages extending between said mounting portions and the risers of said intermediate portion, half the number of said passages connecting with one riser, and half connecting with the other riser, and longitudinal passage means having a cross-sectional area of less than one-half square inch interconnecting said riser passages.

14. An intake manifold for an engine having opposite cylinder banks each including a plurality of cylinders, said manifold comprising opposite portions for mounting said manifold on said engine banks, a pair of longitudinally spaced intermediate portions on which to support a pair of single barrel fuel supply means, conduit means connecting said mounting portions and said intermediate portions, each of said intermediate portions having an intake riser passage connecting with the fuel supply means thereon and said conduit means providing air-fuel passages between said riser passages and said mounting portions, there being an independent air-fuel passage for connecting with each cylinder of the engine and half the number of said passages connecting with one riser and the remainder connecting with the other riser and tubular metering means extending between said intermediate portions and opening into said riser passages for interconnecting the same.

15. An intake manifold as claimed in claim 14 wherein said tubular metering means comprises a plurality of tubes.

References Cited in the file of this patent

UNITED STATES PATENTS

2,640,471 Haltenberger ---------- June 2, 1953