E. H. JACOBS.

OIL SWITCH.

APPLICATION FILED JULY 19, 1910.

1,068,588.

Patented July 29, 1913.

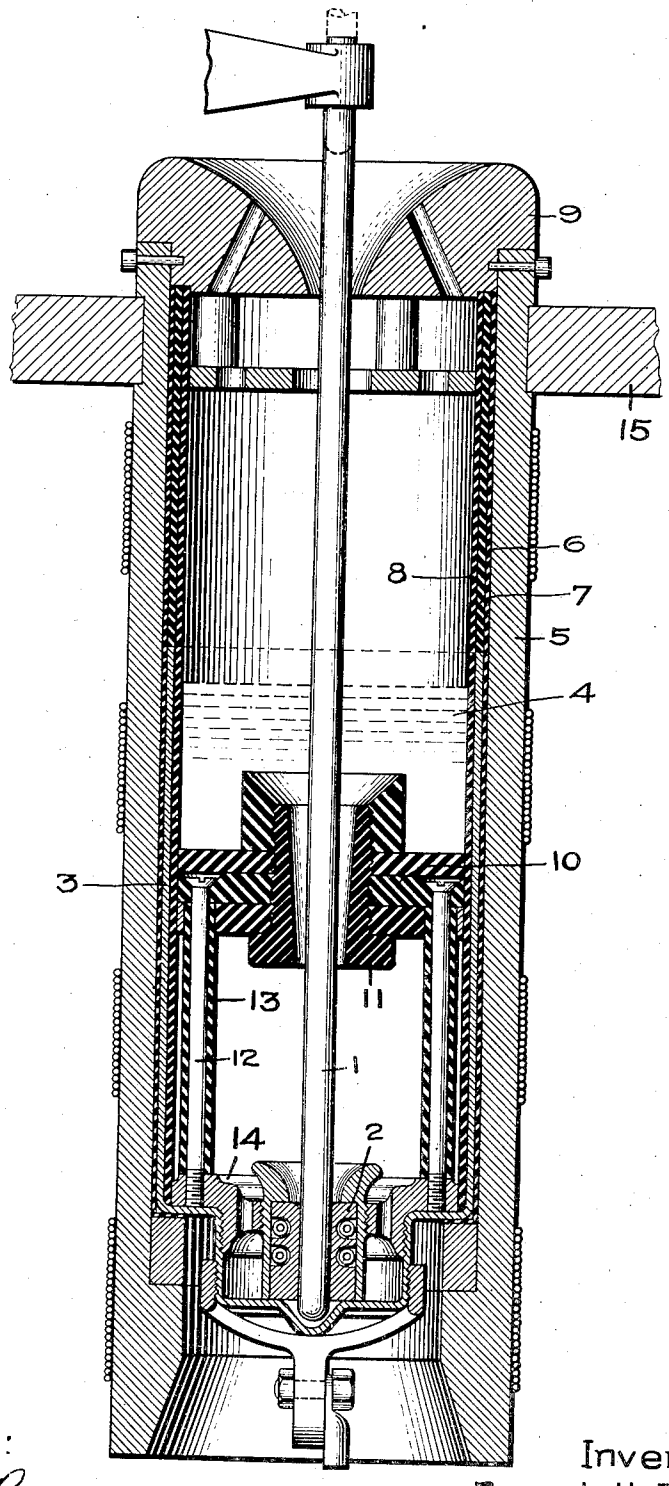

Witnesses:

Marcus L. Byng.

J. Earl Ryan.

Inventor:

Ernest H. Jacobs.

by Albert G. Davis

His Attorney.

UNITED STATES PATENT OFFICE.

ERNEST H. JACOBS, OF SCHENECTADY, NEW YORK, ASSIGNOR TO GENERAL ELECTRIC COMPANY, A CORPORATION OF NEW YORK.

OIL-SWITCH.

1,068,588. Specification of Letters Patent. Patented July 29, 1913.

Application filed July 19, 1910. Serial No. 572,663.

To all whom it may concern:

Be it known that I, ERNEST H. JACOBS, a citizen of the United States, residing at Schenectady, county of Schenectady, State of New York, have invented certain new and useful Improvements in Oil-Switches, of which the following is a specification.

My invention relates to electric switches, and more particularly to oil switches for the purpose of controlling high potential circuits, and its object is to provide for containing the insulating fluid, such as oil, a vessel which has mechanical strength enough to resist the strains caused by opening circuits carrying large amounts of energy, and which is as thoroughly insulated as though the entire vessel were made of insulating material, such as wood.

Where the potential of the circuit to be controlled is high, it has been customary to make the vessels for holding oil or other suitable insulating liquid of some insulating material, such as wood, so that the proper degree of insulation of the circuit against ground will be maintained, but experience has shown that in some cases the pressure generated by opening the circuit when a large amount of energy is flowing is so great that the wooden oil pots are strained and are apt to leak. In carrying out my invention, the oil or other insulating fluid is contained in a metallic vessel large enough to hold the required amount of insulating fluid and strong enough to resist any mechanical strain which may arise as a result of opening the circuit, and the entire metallic vessel is enbedded in and surrounded by walls of solid insulation of sufficient thickness and mechanical strength to support the metallic vessel and at the same time to insulate it properly for the potential of the circuit on which the switch is used. In order to confine the oil put under pressure by the arc and to direct it against the arc to extinguish it as the circuit is being opened, a perforated baffle or partition, preferably of insulation, is placed in the metallic vessel and is connected or rigidly secured to the bottom thereof so that strains due to the pressure developed in the oil vessel and beneath the baffle plate are transmitted directly to the bottom of the vessel and do not tend to distort or displace the insulation which surrounds the metallic vessel.

My invention will best be understood in connection with the accompanying drawing which, merely for purposes of illustration, shows the particular form of the invention which I at this time regard as the best of the various forms in which my invention may be embodied and which shows a longitudinal section of an oil pot constructed in accordance with my invention.

In the particular form of device shown in the drawing, a movable contact rod 1 of the usual form coöperates with a stationary contact 2 of the well known type mounted in the bottom of a strong metallic vessel 3, preferably made of seamless steel so as to be strong enough to resist any strains which may arise as the result of opening the circuit, and tight enough to prevent the escape of any insulating fluid which may be contained in the vessel. The bottom of the vessel is connected to one lead of the circuit to be controlled and the stationary contact 2 is in metallic engagement with the bottom of the vessel, so that the vessel 3 is alive at the potential of the circuit. Some suitable insulating fluid 4, such as oil, is placed in the vessel, such an amount being used that its surface is below the upper edge of the vessel, so that none of the oil can leak out of the vessel. As a result of this construction, the arc formed by the separation of the contacts 1 and 2 is submerged in insulating fluid, which is contained in a vessel strong enough to resist any strains that may be set up and tight enough to prevent leakage of the oil.

Since the vessel 3 is connected directly to the circuit, it must be insulated with the same care as the remainder of the circuit and in the preferred form of construction the steel vessel 3 is embedded in a shell of insulation which consists of wooden walls 5 considerably longer than the steel vessel 3 and extending a considerable distance above the upper edge of the vessel and some distance below the bottom thereof. The walls of the shell of insulation preferably bulge inward over the edge of the vessel 3, so as to be substantially flush with the inner wall of the vessel 3 and thereby hold the steel vessel 3 firmly in position. In the preferred construction as shown in the drawing, the wooden shell 5 is lined with an insulating lining 6 of fiber or other suitable material, while an insulating ring 7 of fiber of the

same thickness as the wall of the steel vessel 3 is placed on the upper edge of the steel vessel and extends from the upper edge of the steel vessel to the top of the insulating shell. The steel vessel 3 is further insulated in the preferred construction by an insulating lining 8 of fiber or other suitable material which extends from the top of the insulating shell to the bottom of the steel vessel 3, fitting snugly against the inner wall of the steel vessel. The upper end of the insulating shell 5 is closed by a cap or cover 9, suitably vented to permit the escape of gases from the interior of the vessel, and the whole construction forms an oil vessel in which the metallic oil containing portion is completely embedded in walls of insulation which are strong enough to support the steel vessel and have sufficient insulating strength to thoroughly insulate the vessel. The pot may be mounted in any desired way, but preferably by means of the insulated support or yoke which engages the upper end of the insulating shell 5.

In order to increase the rupturing capacity of the switch a perforated break up plate or baffle 10, preferably composed of insulating material, and in the specific form shown in the drawing comprising three plates of fiber or other suitable insulating material having considerable mechanical strength, is mounted in the steel vessel 3 below the surface of the oil 4, with its edges in engagement with the insulating lining 8, so that the oil beneath the baffle or plate 10 is confined between the plate and the bottom of the vessel, except for the vent formed by the insulating bushing 11 through which the movable contact rod 1 passes with sufficient clearance to permit the oil to escape from beneath the baffle. The baffle or perforated plate 10 is spaced away from and held in rigid relation to the bottom of the steel vessel 3 in any suitable way, preferably by means of metallic studs 12 which extend through insulating fiber tubes 13 and engage the bottom of the vessel in any suitable way, preferably by being threaded into a metallic collar 14, which in turn is threaded in the bottom of the steel vessel 3. As a result of this construction, the baffle or break up plate 10 is firmly held in position by the metallic studs 13, while at the same time all of the metal of the studs is thoroughly surrounded by insulating walls, and hence there is no tendency for an arc to persist between the moving contact 1 and the studs.

The oil pot is supported from the upper end of the insulating shell by means of some suitable support, such as a wooden frame 15, which engages the upper end of the shell 6, and consequently the steel vessel 3 is held by insulating supports at a safe distance from ground.

As the circuit is opened, the moving contact 1 separates from the stationary contact 2 and moves until its tip passes out of the top of the pot and stops in the position shown by dotted lines, thereby drawing an arc which puts the oil beneath the baffle 10 under pressure. The steel vessel 3 is strong enough to resist this pressure and since the baffle 10 is rigidly held to the bottom of the vessel by the studs 13, the only escape for the oil is through the insulating bushing 11. As the oil rushes out through the insulating bushing into the reservoir formed by the upper part of the shell 6, the arc is quickly extinguished. All of the pressure developed on opening the circuit is resisted by the walls of the steel vessel 3 and by the baffle plate 10, which is rigidly secured to the bottom of the steel vessel, and no strain is exerted on the insulating shell surrounding the steel vessel; consequently there is no danger of the insulating shell being injured, while as soon as the circuit is opened, all of the oil in the pot settles back into the steel vessel 3, out of which it can not leak or escape.

My invention may be embodied in many other forms than that shown, and I therefore do not desire to limit myself to the precise arrangement herein described, but aim in the appended claims to cover all modifications which are within the spirit and scope of my invention.

What I claim as new and desire to secure by Letters Patent of the United States, is,—

1. An electric switch comprising a vessel for containing insulating liquid, said vessel having walls of insulation and having a metallic lining and bottom embedded in said walls, said lining extending above the surface of the liquid in said vessel, relatively movable coöperating contacts mounted to separate in said vessel, and means immovably located in the metallic portion of said vessel for confining the fluid put under pressure by the arc and directing the fluid against the arc to extinguish it.

2. In an electric switch, the combination of a vessel of insulating material, a reinforcing non-leakable metal wall embedded in said insulating material, an insulating liquid partly filling said vessel, a perforated plate rigidly held to and at a distance from the bottom of said vessel with its edges adjacent the walls of said vessel to form with said walls a pressure retaining chamber, and relatively movable coöperating contacts mounted to separate between said plate and the bottom of said vessel and to move to opposite sides of said plate and thereby draw an arc through said perforated plate as the switch is opened.

3. An electric switch comprising a metallic vessel containing insulating liquid, a perforated plate mounted in said vessel below the edge thereof and with its edges adjacent the walls of said vessel to form with said

walls a pressure retaining chamber, means connected to the bottom of said vessel for holding said plate spaced away from and in rigid relation to the bottom of said vessel, a fixed contact mounted in said vessel beneath said plate, and a coöperating movable contact mounted to separate from said fixed contact and to move upward through said perforated plate to a point above said plate as the switch opens.

4. An electric switch comprising a metallic vessel containing oil, a perforated plate rigidly held to the bottom of said vessel and spaced away from the bottom and from the sides of said vessel, an insulating lining extending from the bottom of said vessel and between the sides of said vessel and the edge of said plate to a point above said plate, and coöperating contacts mounted to separate below said plate and to draw an arc through said plate to a point above it as the circuit is opened.

5. An electric switch comprising a metallic vessel, a perforated insulating plate mounted in said vessel below the upper edge thereof, insulating tubular members coöperating with said plate and with the bottom of said vessel to space said plate away from the bottom of said vessel, metallic holding members extending through said tubular members and fixed to said plate and to the bottom of said vessel to hold said plate in position, and relatively movable coöperating contacts mounted to separate between said plate and the bottom of said vessel and to draw an arc up through the opening in said plate as the circuit is opened.

6. An electric switch comprising a metallic vessel containing oil, a collar rigidly secured to the bottom of said vessel, a perforated plate of insulating material mounted in said vessel below the upper edge thereof, studs threaded into said collar and engaging said plate to hold it in definite relation to the bottom of said vessel, insulating walls surrounding said studs, and relatively movable coöperating contacts mounted to separate between said plate and the bottom of said vessel and to draw an arc up through said perforated plate as the circuit is opened.

7. An electric switch comprising a metallic vessel containing oil, coöperating relatively movable contacts mounted to separate in said vessel, immovable means located in said vessel and rigidly secured to the bottom thereof for confining the oil put under pressure by the arc and for directing the oil against the arc to extinguish it, and an insulating wall which engages said metallic vessel and extends above and inwardly over the upper edge of said vessel, whereby said vessel is embedded in said insulating wall.

8. An electric switch comprising a metallic vessel partially filled with oil, coöperating relatively movable contacts mounted to separate in said vessel, immovable means located in said vessel beneath the oil and rigidly secured to the bottom thereof for confining the oil put under pressure by the arc and for directing the oil against the arc to extinguish it, a shell of insulation which incloses said vessel and projects above and inwardly over the upper edge thereof to form an insulating extension flush with the inner surface of said vessel, and an insulating lining in said vessel extending above the top thereof to engage with said insulating shell.

9. In an electric switch, an oil vessel comprising a shell of insulation, a metallic cup having its walls embedded in said shell and extending above the level of the oil in said vessel, coöperating relatively movable contacts mounted to separate in said cup, and means secured to said metallic cup and mounted inside said cup below the edge thereof for confining the oil put under pressure by the arc and for directing the oil against the arc to extinguish it.

10. In an electric switch, an oil vessel comprising a wooden shell, a metal vessel shorter than said shell and fitted into said shell, an insulating ring in alinement with the walls of said vessel and extending from the upper edge of said vessel to the top of said shell, and an insulating lining inside of said vessel and of said ring extending from the bottom of said vessel to the top of said shell.

In witness whereof, I have hereunto set my hand this 18th day of July, 1910.

ERNEST H. JACOBS.

Witnesses:
HELEN ORFORD,
BENJAMIN B. HULL.