(No Model.) 2 Sheets—Sheet 1.

E. R. LOCKWOOD.

FRICTION CLUTCH AND SWIVEL SUPPORT.

No. 456,363. Patented July 21, 1891.

Fig. 5.

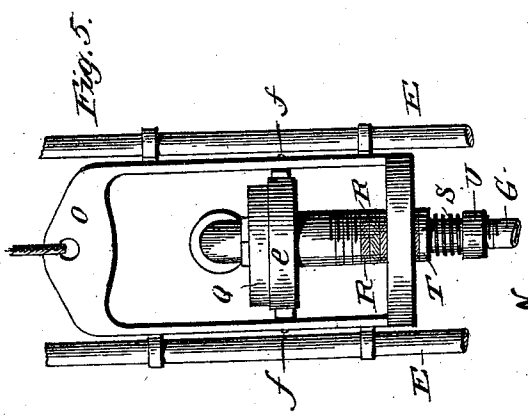

Fig. 1.

Witnesses
J. M. Fowler Jr.
Wm. F. Thomas

Inventor
Elias R. Lockwood
By his Attorney O. D. Barrett

THE NORRIS PETERS CO., PHOTO-LITHO., WASHINGTON, D. C.

(No Model.) 2 Sheets—Sheet 2.

E. R. LOCKWOOD.

FRICTION CLUTCH AND SWIVEL SUPPORT.

No. 456,363. Patented July 21, 1891.

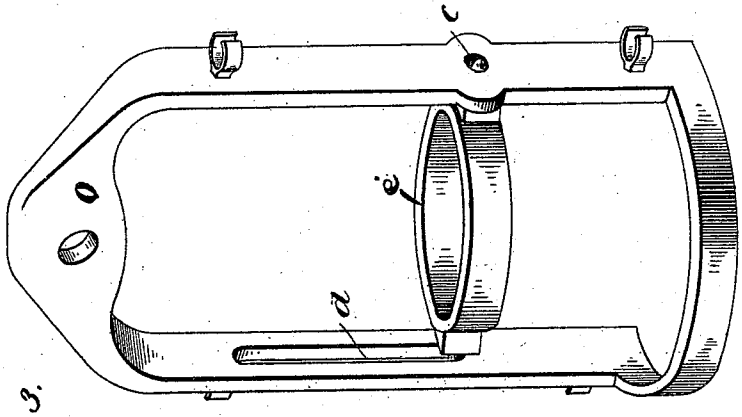

Fig. 3.

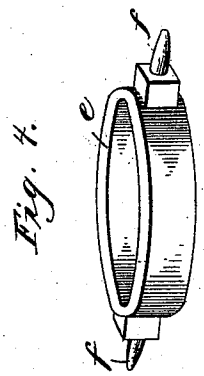

Fig. 4.

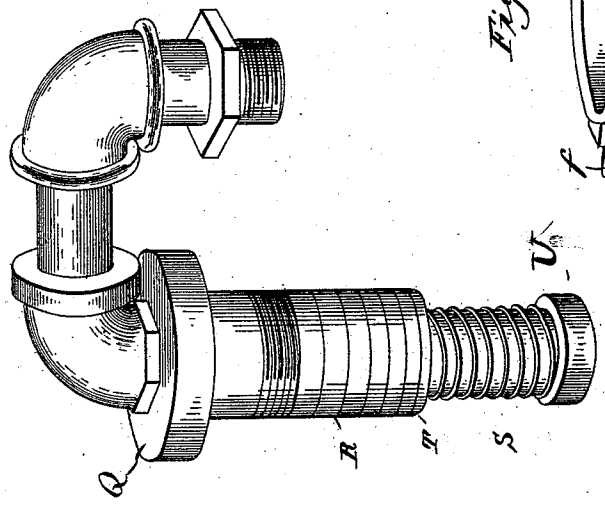

Fig. 2.

Witnesses
J. M. Fowler Jr.
Wm. F. Thomas

Inventor
Elias R. Lockwood
By his Attorney O. D. Barrett

THE NORRIS PETERS CO., PHOTO-LITHO., WASHINGTON, D. C.

UNITED STATES PATENT OFFICE.

ELIAS R. LOCKWOOD, OF BEATRICE, NEBRASKA.

FRICTION-CLUTCH AND SWIVEL-SUPPORT.

SPECIFICATION forming part of Letters Patent No. 456,363, dated July 21, 1891.

Application filed January 21, 1891. Serial No. 378,542. (No model.)

To all whom it may concern:

Be it known that I, ELIAS R. LOCKWOOD, a citizen of the United States, residing at Beatrice, in the county of Gage and State of Nebraska, have invented new and useful Improvements in Well-Boring Apparatus and Supports, of which the following is so full, clear, concise, and exact a description as will enable others skilled in the art to which my invention appertains to make and use the same, reference being had to the accompanying drawings, in which—

Figure 1 is a perspective of my improved appliances of a well-boring machine and friction-clutch. Fig. 2 is a perspective view of the swivel and pipe connection. Fig. 3 is a perspective of the swivel-support. Fig. 4 is a detail view of the collar for supporting the swivel. Fig. 5 is a view of swivel-support, collar, and trainer, showing the manner of connection of the same with the pipe.

The object of my invention is to provide a means by which well-borers may be operated with the greatest degree of accuracy and to the greatest advantage with the least liability of injury to the apparatus.

Another object of my invention is to provide a well-borer apparatus by the use of which the greatest amount of work can be done in the shortest possible time with the least expense of physical and mechanical force.

Another object of my invention is to provide a friction-clutch by the use of which the shaft which operates the drill will slip at a predetermined degree of strain and cease to operate the drill as soon as it encounters any formidable obstruction which would be liable to rupture it or in any way impair its usefulness.

The invention consists in the novel construction, arrrangement, and combination of its parts, as will be hereinafter described, and particularly pointed out by the claims in the specification.

In the accompanying drawings, A represents a wooden frame, which is provided with a suitable journal-box for the support of one end of the shaft B, which is provided with a bevel-gear C, which is adapted to connect with and operate the standards E E E E, which project up from the turn-table and are embraced from opposite sides by the clamps F F. The turn-table carries a bevel-gear D, meshing with the gear C. The clamps F F are secured to the drill G by means of the lever *a* and suitable connecting devices which operate with it. The gear-wheel H is provided with a friction-surface I, which is adapted to be embraced by the friction-clutch J, which consists of two half-circles of band-iron, steel, or other suitable metal, to be bolted together at their opposite ends through the medium of bolts *b b*, extending through the lugs K K on the disk L. To the rear of the disk L is a clutch M, to the back of which is a movable clutch N, held to the shaft in any suitable manner, by means of which it is readily fitted to throw the device in and out of gear at will.

Referring now to the support for the swivel and frame to be used in connection with the well-borer apparatus, O is a trainer adapted to be suspended by pulleys to raise and lower the pipe carrying the swivel in the collar in the center of the trainer. This trainer is provided with a perforation *c* and a vertical slot *d* for the reception and accommodation of a swinging collar provided with trunnions *f f* at opposite sides. The post or head Q is adapted to rest upon the collar *e*, and it supports the elbow with a nipple connection and a tube running down through the collar *e* to carry the water through and into the pipe which is being put down into the well. I provide washers R R, which may be made of leather and rubber fitted tightly to the center tube and pressed upon the end of the head. The washers are kept in place by a spring S, and the spring and washers R R are separated by a steel washer T. A double coupler U is provided below the washers R R to screw on the post and connect the swivel to the pipe which is being driven down.

I do not wish to limit myself to the exact details of the construction shown and described, as many of them may be varied and mechanical equivalents substituted therefor without departing from the spirit of my invention and without interfering with its usefulness; but

What I believe to be new and desire to secure here by Letters Patent, and therefore claim, is—

1. In a well-boring apparatus, the combination, with the trainer having vertical slot and a perforation, of the swiveled collar having trunnions, one of which works in the perforation and the other in the said slot, and the head adapted to rest in said collar, as set forth.

2. In a well-boring apparatus, the combination, with the trainer having vertical slot and a perforation, of the swiveled collar having trunnions, one of which works in the said slot and the other in the said perforation, and the head adapted to rest in the said collar and having the depending tube, the washers on the tube, and the spring pressing the washers against the head, substantially as shown and described.

3. In a well-boring apparatus of the character described, the turn-table provided with standards and the drill provided with a clamp and guide, in combination with a drive-shaft having a friction-wheel adapted to be embraced by a friction-clamp, and a friction-clamp consisting of segments of a circle clamped together through the medium of lugs and bolts, substantially as and for the purposes specified.

In testimony whereof I hereto affix my signature in the presence of two witnesses.

ELIAS R. LOCKWOOD.

Witnesses:
A. H. BABCOCK,
D. H. PETTYS.