United States Patent [19]

Schuster

[11] **3,819,106**

[45] **June 25, 1974**

[54] **SAMPLE BAG**

[76] Inventor: **Samuel J. Schuster,** 1099 Hillside St., Monterey Park, Calif. 91754

[22] Filed: **Apr. 12, 1972**

[21] Appl. No.: **243,347**

[52] **U.S. Cl.**..... **229/62,** 206/63.2 R, 229/80

[51] **Int. Cl.**..... **B65d 33/20**

[58] **Field of Search**..... 229/62, 80; 206/63.2 R; 150/3

[56] **References Cited**

UNITED STATES PATENTS

2,793,743	5/1957	Lefebvre	229/62 X
3,070,280	12/1962	Richmond	229/62 X
3,194,124	7/1965	Warp	229/69 X
3,338,019	8/1967	Trewella et al.	229/62
3,472,369	10/1969	Schuster	229/66 X

Primary Examiner—William I. Price
Assistant Examiner—Stephen P. Garbe
Attorney, Agent, or Firm—Fraser and Bogucki

[57] **ABSTRACT**

A pre-sterilizable sample bag is disclosed for receiving and storing a sample for analysis at a location remote from the situs of sample collection. The bag is fabricated of material essentially completely impermeable to bacteria and other foreign matter and includes an access opening covered by a removable closure membrane essentially completely impermeable to bacteria and other foreign matter but highly permeable, in comparison to said bag material, to sterilizing vapor. The outer surface of the bag includes an adhesive coating adapted to be engaged in sealing contact with the area of the bag material about the access opening to completely seal the opening after removal of the closure membrane and insertion of the sample into the bag.

15 Claims, 7 Drawing Figures

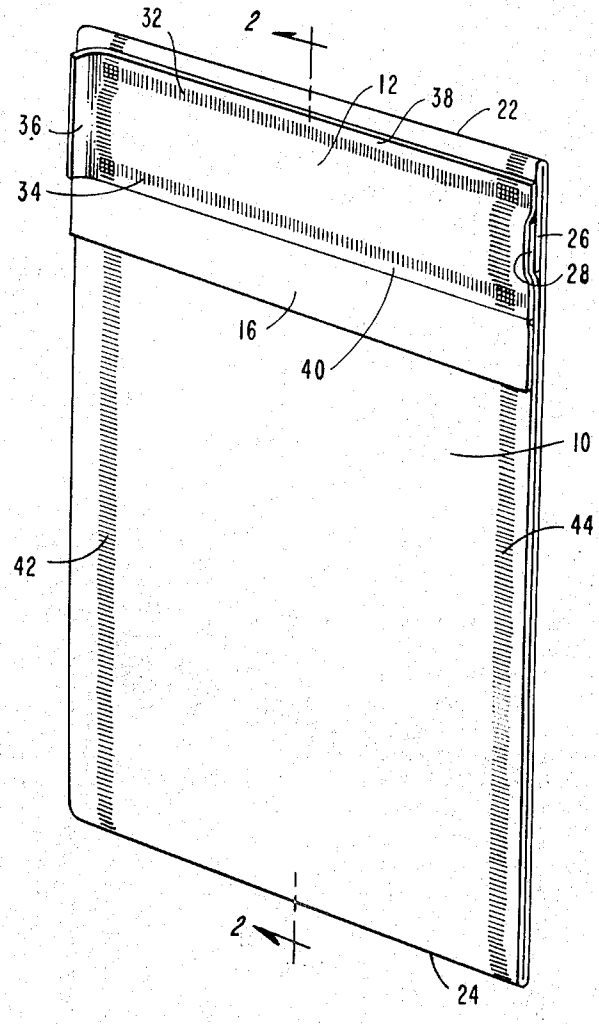

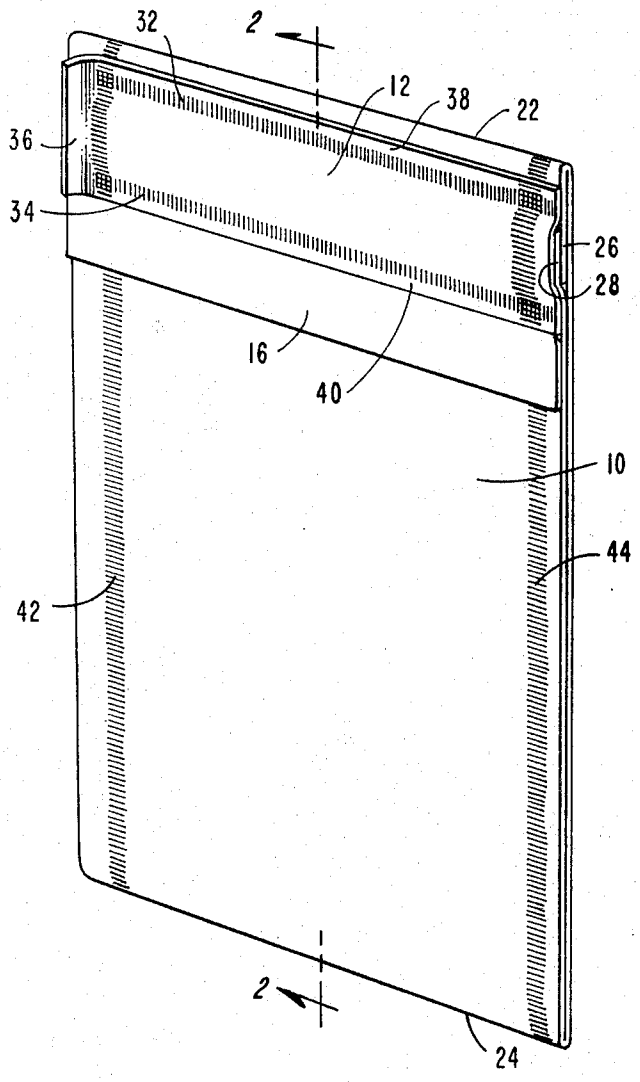
32
2
12
38
22
36
34
26
28
16
40
10
44
42
2
24

FIG.—1

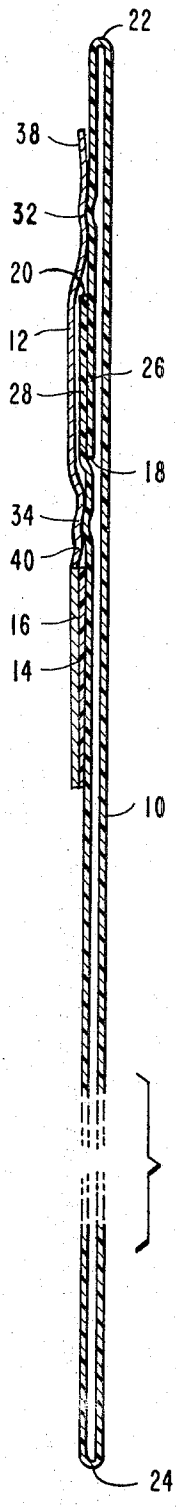
22
38
32
20
12
26
28
18
34
40
16
14
10
24

FIG.—2

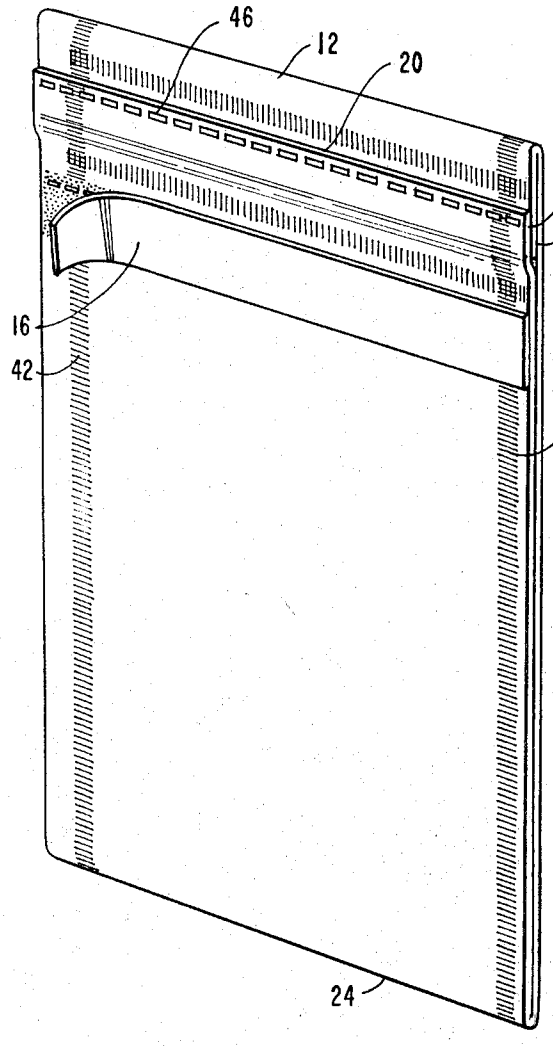

FIG.—3

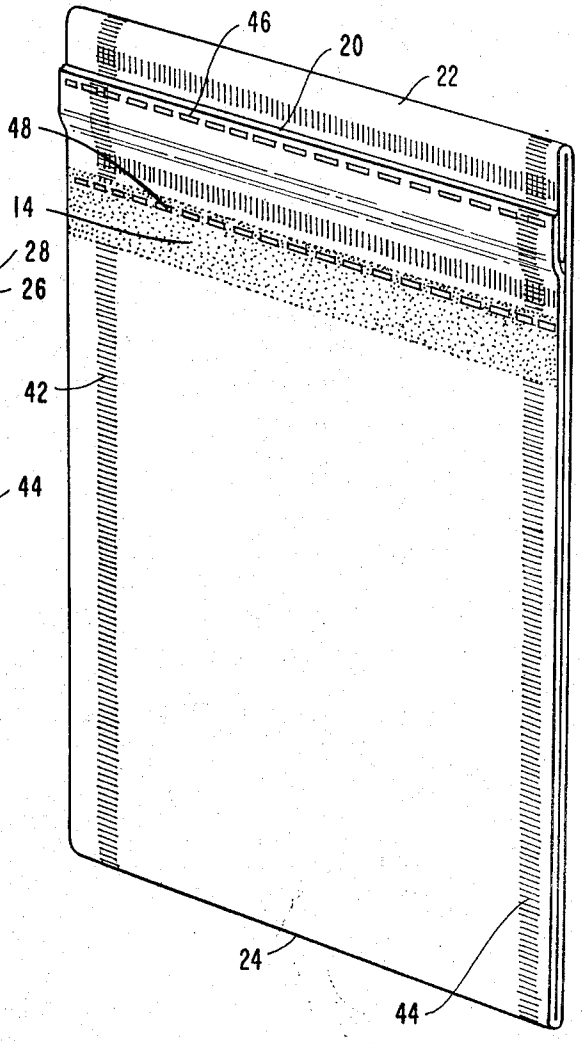

FIG.—4

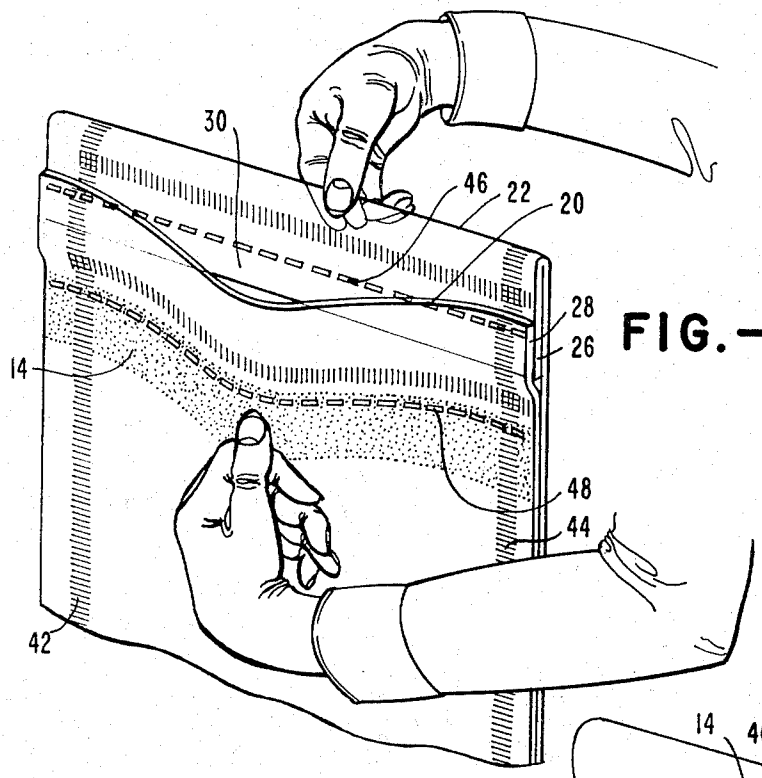

FIG.—5

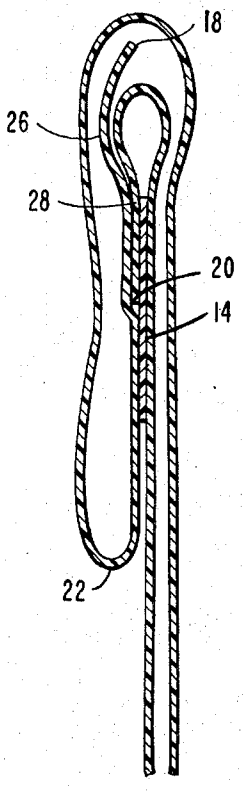

FIG.—7

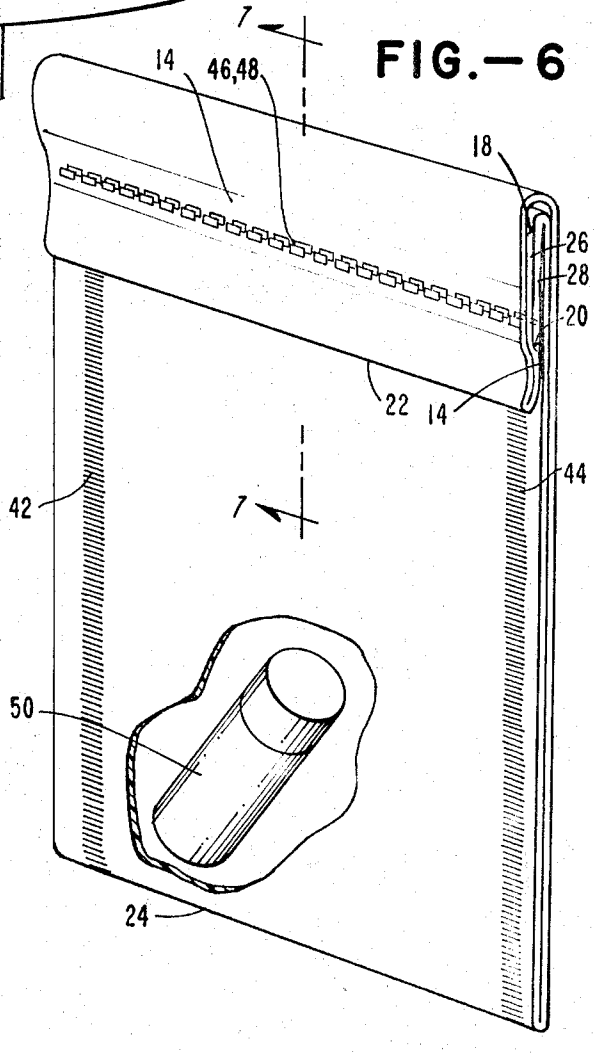

FIG.—6

SAMPLE BAG

FIELD OF THE INVENTION

The present invention relates generally to sample receptacles and particularly to pre-sterilizable, readily openable sample bags resealable to completely prevent the entry of foreign matter so as to maintain the condition of said sample for subsequent analysis.

BACKGROUND OF THE INVENTION

There are presently available various kinds of receptacles for collecting biological, marine, agricultural and other samples for analysis at a location remote from the situs of sample collection. Such sampling, collection and analysis have always been of substantial importance to a number of industries and government agencies for monitoring water resources, crops, and so forth, and is assuming even greater importance today in light of the increasing emphasis of the study and preservation of environmental and ecological parameters.

The sample that is obtained in the field must, of course, be retained in a state in which introduction of extraneous factors at the time of collection or during retention are completely avoided or at least minimized. One way to accomplish this is to insert the sample in a container or receptacle that has been previously sterilized and to immediately reseal the receptacle in a manner to preclude the entry of foreign matter which would introduce unknown qualitative and quantitative variables into the subsequent analysis. The object is to preserve the sample in a condition in which its subsequent laboratory analysis will be meaningful insofar as ascertaining accurately its state at the time of collection.

SUMMARY OF THE INVENTION

According to the present invention there is provided a sample receptacle in the form of a flexible bag whose interior may be readily pre-sterilized. The sample bag of the invention is further characterized by the ability to maintain a sterilized condition over a long period of time and by the ease with which it may be opened, loaded and sealed.

In accordance with the broad structural aspects of the invention, a bag is provided that is fabricated of a material essentially completely impermeable to bacteria and which includes an access opening covered by a removable closure membrane essentially completely impermeable to bacteria but highly permeable, in comparison to the bag material, to sterilizing vapor such as steam or ethylene oxide. The outer surface of the bag includes sealing means shaped and positioned to be engaged in sealing contact with the portions of the bag material about the access opening so that the bag may be completely sealed after removal of the closure membrane and insertion of the sample.

In accordance with other, more specific aspects of the invention, the bag is foldable along a portion thereof between the sealing means and the access opening so that the parts of the bag about the access opening may be brought into sealing contact with the sealing means. Indicia, such as a pair of spaced lines printed on the bag, may be provided to facilitate sealing of the bag. Upon folding of the bag, such indicia are brought into registry to assist in the positioning of the access slit relative to the sealing means so that complete sealing of the access opening is assured.

The bag is preferably constructed of transparent, heat sealable plastic such as polyethylene or polypropylene or the like and the closure membrane typically comprises a paper tear strip removably attached to the outer surface of the bag about the access opening.

According to a more specific form of the invention, the bag may be constructed along the lines disclosed in U. S. Pat. No. 3,472,369 issued Oct. 14, 1969 to the inventor of the present invention, and entitled "Readily Opened Package For Storing Items In Bacteria-Free Condition." Pursuant to that construction, certain features of which are incorporated herein, the bag is fabricated of a heat sealable plastic sheet essentially completely impermeable to bacteria. The sheet has longitudinal and transverse edges and is folded along longitudinal fold lines so that the longitudinal edges define a longitudinally extending access opening. A removable closure membrane of paper, for example, essentially completely impermeable to bacteria but highly permeable, in comparison to the plastic sheet, to sterilizing vapor, extends the length of the bag and closes the access opening, the membrane being secured to the exterior of the bag by longitudinal, continuous, pressure heat seal joinder lines adjacent the access opening on each side thereof. Continuous pressure heat seal joinder lines extend along the transverse edges closing the bag and further uniting the membrane to the plastic sheet along the transverse edges.

Pursuant to specific aspects of the present invention, a pressure-sensitive adhesive is applied to a longitudinally extending rectangular area of the exterior surface of the bag, the area lying parallel to the access opening. The adhesive area is overlaid with a protective paper strip pending use of the bag. The interior of the bag is sterilized by any of the well-known processes involving the exposure of the bag interior to a sterilizing vapor passing through the strip. In use, the closure membrane is removed permitting insertion of the sample into the bag through the access opening, following which the bag is sealed by removing the protective strip and folding the bag to bring the area of the bag about the access opening into sealing contact with the pressure-sensitive adhesive area.

BRIEF DESCRIPTION OF THE DRAWINGS

Further objects, advantages and feature of the present invention will become readily apparent from a reading of the detailed description in conjunction with the accompanying drawings, in which:

FIG. **1** is a perspective view of a sample bag constructed pursuant to the teachings of the present invention;

FIG. **2** is a cross-section view of the bag of FIG. **1** as seen along **2—2**;

FIGS. **3, 4, 5** and **6** are perspective views of a sample bag according to the present invention illustrating, in sequence, the manner in which the bag is used; and

FIG. **7** is an enlarged cross-section view of the upper portion of sample bag in the sealed configuration, the section being taken along **7—7** in FIG. **6.**

DETAILED DESCRIPTION

For purposes of illustrating the background of the invention and the state of the art, the aforementioned U. S. Pat. No. 3,472,369 issued to the present inventor on Oct. 14, 1969 is incorporated herein by reference.

At the outset, it is to be noted that in the accompanying drawings the thicknesses of the plastic and paper sheet material and that of the adhesive coating have been greatly exaggerated to clearly show their interrelationship. Further, in the description that follows, the terms "longitudinal" and "length" denote directions and dimensions parallel with the access opening and closure membrane directions and the terms "transverse" and "width" denote directions and dimensions perpendicular to the longitudinal direction.

Referring now to the drawings, sample bags according to the present invention comprise mainly a flexible container **10**, a closure membrane **12** and an adhesive coating **14** covered by a protective strip **16.** The container portion of the bag comprises a rectangular sheet of plastic such as polyethylene having a thickness sufficient for purposes of strength and durability and for rendering the container essentially completely impermeable to bacteria and other foreign matter. Heat sealable materials other than polyethylene, may, of course, be used, such materials including polypropylene, nylon, polybutylene, and so forth, but polyethylene has the added desirable properties of being low in cost and easily processed for purposes of fabrication of the sample bag.

The container **10** is preferably made of transparent stock to facilitate identification of the contents of the bag once the sample is enclosed but it will be appreciated that translucent or even opaque plastic can be utilized if desired for particular applications. Tinted plastics to selectively filter light or other electromagnetic radiation may also be employed. Further, the plastic sheet stock may be treated by embossing in accordance with techniques well known in the art and further may be a composite structure fabricated of two every thin sheets cohered together mechanically. Such coherence can be enhanced by subjecting the sheet stock to corona discharge as is well known in the art.

Containers according to the present invention may be readily formed from a continuous sheet of material, the longitudinal edges **18** and **20** thereof being folded inwardly along spaced, parallel longitudinal fold lines **22** and **24.** Portions **26** and **28** of the sheet adjacent the longitudinal edges **18** and **20** are brought into overlapping relation, with the upwardly extending portion **28** overlying the downwardly extending portion **26.** The overlapping portions **26** and **28** of the container **10** define a longitudinal access slit or opening **30** which for purposes of the present invention is preferably disposed near the upper longitudinal fold line **22** of the container.

The closure membrane **12** comprises a longitudinal strip bonded to the container by parallel heat seal joinder lines **32** and **34.** The functions of the membrane **12** are to close the access opening **30** and form a barrier to bacteria and other foreign matter while simultaneously being highly permeable to sterilizing vapor, such as steam or ethylene oxide, in comparison to the plastic container **10.** The longitudinal heat seal joinder lines **32** and **34** bracket the overlapping portions **26** and **28** of the container **10.** Although these bonds are preferably and most easily obtained by heat sealing, using spaced-apart heat seal sealer bars elevated to the required heat sealing temperature, they may also be provided by adhesive or other forms of chemical or mechanical bonding.

The closure membrane **12** may be made of conventional paper 3 to 7 mils thick. Paper is characterized by several important properties for purposes of this invention. Unlike plastic, increasing the thickness of paper does not substantially affect its permeability to sterilizing vapors. On the other hand, the labyrinth, fibrous structure of paper is such that it effectively prevents bacteria from penetrating into the container **10.**

The closure membrane **12** may be provided with a thin polyethylene coating (not shown), such coating being in contact with the outer surface of the container **10.** The thickness of the polyethylene coating would preferably be of the order of 1/2 mil which is insufficnet to impede the passage of sterilizing vapor but nevertheless provides a sufficient thickness to facilitate the heat seal joinder of the closure membrane **12** and the container **10.** Preferably, however, the container **10** is treated by corona discharge along the longitudinal heat seal areas so as to render the described thin polyethylene coating unnecessary, the membrane **12** being thereby directly heat sealable to the container **10.**

Many kinds of inexpensive paper may be employed for the closure membrane but depending upon particular needs other materials, both woven and nonwoven, that are impermeable to bacteria yet are comparatively highly permeable to sterilizing vapors may be used. These alternatives would include various paper-like materials such as glass fiber products and "Tyvac," a spun polyolefin of the Dupont Company, all of which are impermeable to bacteria but in comparison to the plastic container **10** highly permeable to sterlizing vapor.

As shown in FIG. **1,** the longitudinal joinder lines **32** and **34** may be terminated short of the end of the closure membrane **12** to define a pull tab **36** which serves as a manual gripping edge and thereby facilitates removal of the closure membrane. The membrane **12** may also have transverse extensions **38** and **40** beyond the longitudinal joinder lines **32** and **34** of sufficient width to provide a lateral pull tab along each longitudinal side in addition to, or instead of, the end tab **36.** It is generally sufficient to provide a pull tab of only so much width that it can be grasped with the tips of the fingers. Where greater tearing forces are involved more area may be provided for more secure gripping.

The transverse end edges of the bag are joined to each other and to the closure membrane **12** by transverse joinder lines **42** and **44** each of which is adjacent one of the ends of the bag. The joinder lines **42** and **44** are also preferably and most conveniently produced by heat seals. Thus, it will be apparent from FIG. **1** that the longitudinal access opening **30** is completely bounded by a continuous bond or heat seal which is completely impervious to the passage of bacteria and foreign matter; likewise, the interior of the bag is completely isolated against the entry of bacteria and foreign matter. The transverse heat seal **42** along the end of the bag having the pull tab **36** may be spaced somewhat further from the corresponding edge of the bag than the seal **44** so that a sufficient pull tab area is exposed.

The adhesive coating **14** is applied to the outer surface of the container along a longitudinally extending rectangular area adjacent the lower edge of the closure membrane **12.** The adhesive coating **14** is covered by te protective strip **16** of wax-impregnated paper or the like. The adhesive coating **14** may comprise any pres-

sure sensitive bonding material such as a latex type adhesive or the like.

Indicia, which may be in the form of parallel broken lines **46** and **48** printed on the container **10**, insure that the access opening **30** is in proper relationship with the adhesive coating **14** when the bag is folded for sealing after the sample has been inserted. In the example under consideration, the upper broken line **46** is positioned parallel with and just below the longitudinal edge **20** and the lower broken line **48** is placed parallel with and below the upper boundary of the adhesive coating **14**. It will be evident that the placement of the indicia may vary according to the particular design but in any event, when the bag is folded for sealing, the longitudinal edge **20** should lie approximately along the longitudinal center line of the adhesive coating **14**.

The bag may have appropriate printed matter including blanks to be filled in with the identification of the sample collected, and other information. The closure membrane **12** may likewise include printed matter and also have marginal indicia showing the points at which the membrane may be most readily gripped for removal and the preferred direction of removal.

The bags may be fabricated individually on suitable bag-making apparatus such as the "Simplex" machine manufactured by FMC Corp. of San Jose, Calif. In these machines, plastic sheet stock is fed intermittently in successive steps, heat sealed across the ends and cut into separate bags. Such standard bag-making machines require certain modifications the nature of which are unimportant to the disclosure of the present invention but which facilitate the production of the bags of the present invention at an extremely high rate with a great deal of reliability, accuracy and repeatability.

Generally, the sheet stock forming the container **10** is fed from a supply roll, folded over along the longitudinal fold lines **22** and **24** as explained and joined to the closure membrane **12** to form a composite tube stock. The closure membrane **12** is fed concurrently with the plastic sheet stock and is fed along the longitudinal access opening **30** and into contact with the outer surface of the container **10**. The adhesive coating **14** may be simultaneously and continuously applied along with the overlying protective strip **16**. The longitudinal joinder lines **32** and **34** are added by a heat seal mechanism using longitudinal parallel spaced heater bars and actuated intermittently in timed relation with the feeding of the stock material. The transverse heat sealing operations and the cutting operation may take place in conventional fashion using, for example, either roller elements or heat seal bars to apply the transverse heat seals and either a mechanical or thermal cutter to separate the tube stock adjacent the transverse heat seals **42** and **44** thereby forming individual bags.

Following fabrication of the bag, the interior thereof is sterilized by any of the well-known sterilizing vapor techniques such as the ethylene oxide process. The interior of the bag will remain in sterile condition over an extended period of time, typically in excess of one year and may thus be stored until ready for use.

In accordance with one practical example of a sample bag embodying the invention, the bag has an overall length of 11 1/4 inches and an overall width of 18 inches. The closure membrane **12** and protective strip **16** are in abutment and have widths of 3 inches and 1 1/2 inches respectively. The width of the adhesive coating **14** is also 1 1/2 inches. The upper edge of the closure membrane **12** lies about 5/8 inch from the upper longitudinal fold line **22**. The portions **26** and **28** of the container have an overlap of 1 inch, the longitudinal edge **20** lying about 1 3/4 inches from the fold line **22**. The length of the pull tab **36** is about 1/2 inch and the broken line indicia **46** and **48** are spaced 2 inches apart, the upper line **46** being positioned about 1/8 inch below the longitudinal edge **20**.

Turning now specifically to FIGS. **3–7**, the utilization of the sample bag of the present invention will be described. First, the closure membrane **12** is removed by grasping the tab **36** and pulling the membrane toward the right, as viewed in FIG. **3**. Next (FIGS. **3** and **4**), the protective strip **16** is pulled away from the adhesive coating **14**. If there are two persons handling the sample collection operation, as is usually the case, the sample loading technique shown in FIG. **5** may be employed. One person holds the sample bag with one hand along the upper margin thereof. By lightly contacting the adhesive coating **14** with the thumb of the other hand, and applying a gentle pull, the overlapping portions **26** and **28** of the bag are separated to open the access opening **30**. The other person then drops the sample **50** into the bag which is then sealed (FIGS. **6** and **7**) by folding the upper part of the bag along a longitudinal line about mid-way between the indicia lines **46** and **48** to bring the lines into registry and firmly pressing the portion of the bag about the access opening into engagement with the adhesive coating **14**. The access opening **30** is thus completely sealed by the adhesive coating **14** against the entry of bacteria or other foreign matter. Although it appears from FIG. **7** that bacteria may enter through an opening below the edge **20**, because of the thinness and flexibility of the plastic sheet and the flowability of commercially available pressure - sensitive adhesives which may be used for the adhesive coating **14**, said opening, below edge **20**, does not exist in actual practice. If only one person is available to both manipulate the sample bag and insert the sample, a small area of the adhesive coating **14** may be pressed lightly into engagement with a stationary object. With one hand the rest of the bag is pulled away to open the access opening **30** and the sample **50** is then inserted with the other hand.

What is claimed is:

1. A pre-sterilizable bag for receiving and storing a sample for analysis at a location remote from the situs of sample collection, said bag being fabricated of a material essentially completely impermeable to bacteria and including an access opening covered by a removable closure membrane essentially completely impermeable to bacteria, but highly permeable, in comparison to said bag material, to sterilizing vapor, the outer surface of said bag including sealing means shaped and positioned to be engaged in sealing contact with the area of said bag material about said access opening to completely seal said opening after removal of said closure membrane and insertion of said sample into said bag.

2. A bag, as defined in claim **1**, in which said bag material is transparent plastic and said closure membrane comprises a paper strip removably attached to the outer surface of said bag about said access opening.

3. A bag, as defined in claim **1**, in which said sealing means and access opening are in spaced relation, said bag being foldable along a portion of said bag between

said sealing means and said access opening for bringing the portion s of said bag about said access opening into sealing contact with said sealing means.

4. A bag, as defined in claim **3,** in which said access opening comprises an elongated, generally linear slit and said sealing means includes a pressure-sensitive adhesive coating applied to said bag as a strip substantially parallel to said access opening.

5. A bag, as defined in claim **4,** which includes indicia adapted to be brought into registry upon folding of said bag to assist in the positioning of said access opening relative to said adhesive coating.

6. A bag, as defined in claim **5,** in which said indicia includes a pair of spaced, linear marks parallel to each other and said access opening.

7. A pre-sterilizable bag for receiving and storing biological samples for subsequent analysis, said bag being fabricated of a material essentially completely impermeable to bacteria and including an access opening covered by a closure membrane, said membrane being essentially completely impermeable to bacteria but highly permeable, in comparison to said bag material, to sterilizing vapor, said bag further including an adhesive coating, said closure membrane being removable and said bag being foldable to bring the region about said access opening into sealing engagement with said adhesive coating to seal said opening against the entry into said bag of bacteria, foreign matter or the like.

8. A bag, as defined in claim **7,** in which said bag material is transparent plastic and said closure membrane comprises a paper strip removably attached to the outer surface said bag about said access opening.

9. A bag, as defined in claim **7,** in which said adhesive coating and access opening are in spaced, parallel relation, said bag being foldable along a portion thereof between said adhesive coating and said access opening for bringing the portions of said bag about said access opening into sealing contact with said adhesive coating.

10. A bag, as defined in claim **9,** in which said access opening is defined by overlapping longitudinal edge portions of said bag and said adhesive coating comprises a pressure-sensitive adhesive applied to the outer surface of said bag as a strip substantially parallel to said access opening.

11. A bag, as defined in claim **10,** which includes indicia adapted to be brought into registry upon folding of said bag to assist in the positioning of said access opening relative to said adhesive coating and insure complete sealing of said opening.

12. A bag, as defined in claim **11,** in which said indicia comprises a pair of spaced, parallel lines.

13. A flexible sample bag, capable of having its interior sterilized by sterilizing vapor, comprising:

a heat sealable plastic sheet essentially completely impermeable to bacteria, said sheet having longitudinal and transverse edges and being folded along longitudinal fold lines, said longitudinal edges defining a longitudinally extending access opening;

a removable closure membrane of a material essentially completely impermeable to bacteria and highly permeable, in comparison to said plastic sheet material, to sterilizing vapor, said membrane extending the length of said bag and closing said access opening, said membrane being secured to the exterior of said bag by a longitudinally extending, continuous, pressure heat seal joinder line on each side of said opening;

continuous, pressure heat seal joinder lines extending along said transverse edges closing said bag and further uniting said strip to said plastic sheet along transverse edges; and

a pressure-sensitive adhesive coating applied to a longitudinally extending area of the exterior surface of said bag, said area lying in spaced, parallel relation to said access opening, said region being overlayed by a protective strip ending use of said bag whereby the interior of said bag is sterilizable by a process involving the exposure of said bag interior to a sterilizing vapor passed through said membrane, said membrane being removable to permit insertion of said sample into said bag through said access opening, said bag being sealable by removing said protective strip and folding said bag to bring the area of said bag about said access opening into sealing contact with said pressure-sensitive adhesive area.

14. A sample bag, as defined in claim **13,** in which at least one of said transverse heat seal joinder lines is spaced from the corresponding transverse edge to define a pull tab on said removable membrane.

15. A sample bag, as defined in claim **13,** which includes spaced indicia registrable upon folding of said bag to assist in the positioning of said access opening relative to said pressure-sensitive adhesive coating to insure complete sealing of said access opening.

* * * * *