Jan. 22, 1935. D. A. McLAREN ET AL 1,988,603

BASEBOARD STRUCTURE

Filed Oct. 19, 1931

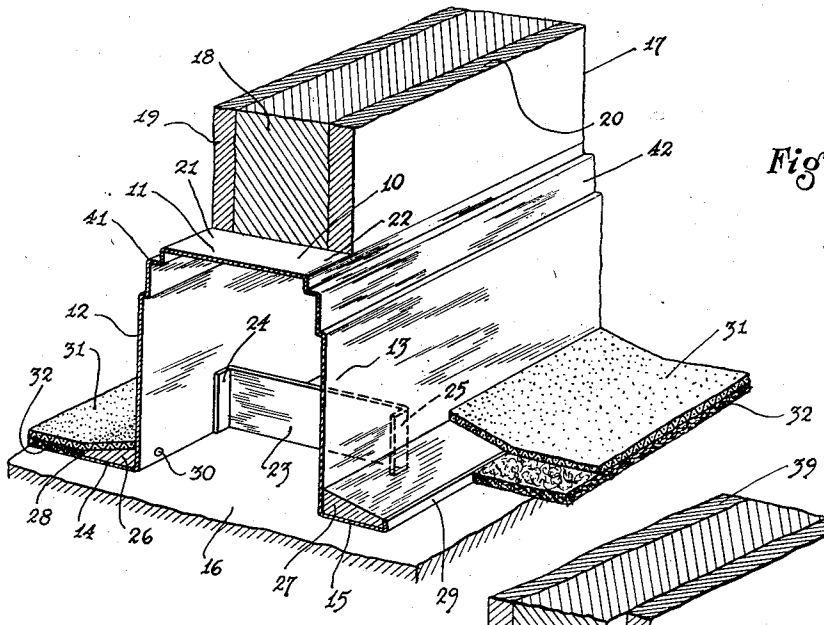


Fig. 1

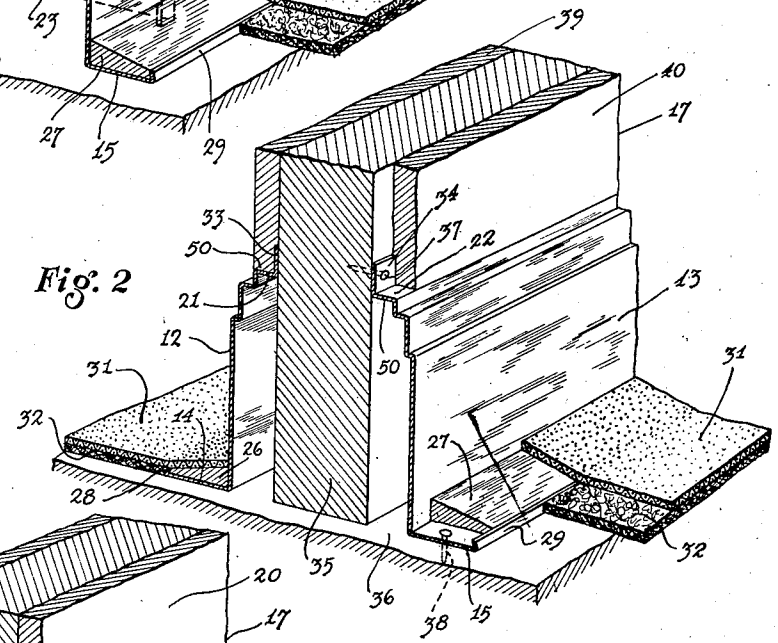


Fig. 2

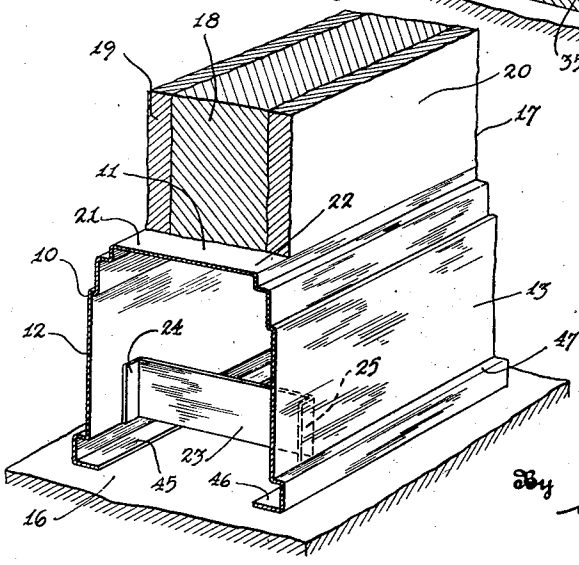


Fig. 3

Inventors

Don A. McLaren and

Albert O. Larson

By Bacon & Lagaard

Attorneys

Patented Jan. 22, 1935 1,988,603

# UNITED STATES PATENT OFFICE

1,988,603

## BASEBOARD STRUCTURE

Don A. McLaren and Albert O. Larson,
Minneapolis, Minn.

Application October 19, 1931, Serial No. 569,636

3 Claims. (Cl. 189—87)

Our invention relates to improvements in baseboard structures and has in its contemplation the provision of a simple, durable, unitary structure constituting a footing for a partition wall and providing baseboard members for and at either side of the wall structure.

An object of the invention is to provide a unitary structure of the present character, whereby, in the use thereof, the number of operations required in the initial construction of a partition may be materially reduced and, whereby, in the event of the necessity of shifting such partition, the operations required in dismantling and reconstruction may be limited and the work expeditiously effected with a minimum of waste in the materials and without mutilation of the floor.

An object of the invention resides in supplying an article of the present nature formed from sheet metal, in channel-like formation, to provide a web upon which the wall proper may be constructed and to provide legs for the purpose of sustaining the weight of the wall and also for the purpose of providing the ultimate baseboard members for the wall structure.

Another object of the invention is to supply such a channel-like footing for a wall structure in which anchoring devices for carpet nailing strips are incorporated in the construction of the leg members.

Other objects of the invention reside in the novel combination and arrangement of parts and in the details of construction hereinafter illustrated and/or described.

In the drawing:

Figs. 1 and 3 are fragmentary perspective views of partition wall structures wherein different embodiments of our invention are utilized.

Fig. 2 is a fragmentary perspective view of a wall construction provided with baseboard structures having incorporated therein the carpet strip securing feature of our present invention.

Referring to the drawing, wherein similar parts are designated by similar reference numerals throughout the several views, it is to be noted that the baseboard structure illustrated in Fig. 1 and indicated in its entirety by the numeral 10, is formed from sheet metal, bent or rolled to provide a unitary channel-like structure, the web thereof being indicated at 11 and the legs at 12 and 13. This structure is so arranged that the web 11 thereof occupies a horizontal position at the uppermost portion of the structure where it may directly receive the weight of the wall, the two leg members 12 and 13 thereof, in such disposition of the structure, forming two baseboard members which transmit the weight of the wall to the floor. At the lower portions of the legs 12 and 13 are outwardly projecting flanges or feet 14 and 15 which support the baseboard structure upon the floor of the building.

For the purpose of illustrating the application of the invention, a portion of a floor has been shown which is indicated at 16. In the construction of the wall or partition, which is indicated in its entirety at 17, the baseboard structure 10 is merely placed upon the floor 16 in the desired locality and the building of the wall commenced. The body 18 of the wall 17 is built upon the web 11 of the baseboard structure medially thereof. If tile or gypsum block construction is employed, the tile or blocks are merely laid upon the web 11 and the partition 17 built to the required height in the usual manner. After the body 18 of the wall has been finished, the plastering 19, 20 may be applied in the usual manner. An inspection of Fig. 1 will show that the web 11 of the baseboard structure is considerably wider than the body 18 of the wall leaving ledges 21 and 22 at either side of the wall for the plastering, the width of said ledges being equal to the thickness of the plastering. After the wall has been plastered, the baseboard members 12 and 13 are washed and the wall is then complete.

For the purpose of reinforcing the baseboard structure, a number of tie members 23 are employed, the same being formed at their ends with flanges 24 and 25 which are welded or otherwise secured to said baseboard members 12 and 13. Such construction holds said baseboard members properly spaced and stiffens the entire structure so that it will carry the load of a wall or partition without buckling or otherwise becoming distorted.

In addition to their functions in supplying weight sustaining legs and baseboard members, the parts 12 and 13 of our improvement provide anchorages for carpet nailing strips, such as we have shown at 26, 27 in the drawing. These nailing strips, which may be of wood, are preferably wedge-shaped in cross section and are placed upon the flanges 14 and 15 of the baseboard structure. To hold these strips in position, lips 28 and 29 are turned upwardly at the free edges of said flanges to engage the carpet strips and hold them laterally immovable. In order to keep these nailing strips 26, 27 from rising out of the sockets formed by the flanges 14, 15 and the lips 28, 29 when tension is applied to the carpet, the baseboard members 12 and 13 may be formed with apertures 30 along the lower portions thereof through which nails may be directly driven into the carpet strips. If desired, lugs may be struck out of the said baseboard members or other forms of protuberances formed thereon for the purpose of engaging the carpet nailing strips 26, 27 and holding them in place within their respective sockets. In the present connection, it will be understood that we contemplate the use of carpet nailing strips of material other than wood, it being obvious that any of a number of the well

known self-setting plastic or mastic substances, suitable for the purpose, can be molded in the sockets or forms provided by said flanges 14, 15 and lips 28, 29.

In Fig. 1 of the drawing, we have shown carpeting 31 resting upon cushions or pads 32. These pads extend up to the lips 28, 29 while the carpeting 31 overlies the nailing strips 26, 27 and is tacked thereto in the usual manner.

When the wall is built as shown in the drawing, the two baseboard members 12 and 13 are exposed and constitute the ornamental part of the baseboard structure. To enhance the appearance of said members, the upper portions thereof, indicated at 41 and 42 may be bent or rolled in an ornamental manner to simulate molding. Such construction, aside from improving the appearance of the baseboard structure, stiffens the same so that the entire structure is more capable of supporting the load without buckling or otherwise being distorted and so that a lighter material may be used in the construction of the baseboard structure. And such construction, in its preferred form, supplies grounds for the plasterer's screed, which are of great utility in the plastering of wall 18. In each of the three figures of the drawing, the plastering grounds are shown, the same being provided in the uppermost inset portions of the legs 12 and 13.

The baseboard structures shown in Fig. 2, although employed primarily as trim in connection with walls built up from the floor, constitute anchoring elements for carpet nailing strips as in the form illustrated in Fig. 1. Referring to Fig. 2, it will be observed that the baseboard members 12 and 13 are separately constructed, said members having portions 50 forming the ledges 21 and 22 and further having attaching flanges 33, 34 bent upwardly from said portions 50. Said flanges 33, 34 may be fastened to the wall 35, as by nails 37 and the flanges 14, 15 at the lower portions of the members 12, 13 likewise may be fastened to the floor 36, as by nails 38. Said flanges 14, 15 together with the lips 28, 29 thereon form anchoring sockets for nailing strips 26, 27 as in the structure shown in Fig. 1.

The baseboard structure illustrated in Fig. 3 is similar to the form shown in Fig. 1, except that the nailing strip feature is omitted, the flanges, indicated by the reference numerals 45, 46, at the lower portions of the baseboard members 12 and 13 being turned inwardly instead of outwardly. In this form (Fig. 3), the lower portion of the baseboard members 12 and 13 are offset, as designated at 47, to simulate a quarter-round or other molding such as is customarily used at the floor line of baseboards.

Among the numerous advantages residing in our invention, it is to be noted that the baseboard structure provided is simple, durable and inexpensive in construction; that in the footing provided thereby, the weight supporting legs constitute the exposed ornamental baseboard members; that a wall in which the baseboard structure is employed as a constituent part may be readily and economically constructed due to the saving effected in materials and in operations, as well; that neither floor nor baseboard structure need be mutilated in the forming of a wall structure employing our improvement as a footing therein and that such a wall structure may be readily shifted, the work requiring only a limited number of operations and entailing but relatively slight loss in materials during the dismantling and rebuilding processes.

In providing carpet nailing strips and secure anchorages therefor in the form of baseboard structure shown in Fig. 1, there is no necessity of sinking such nailing strips into a floor, or otherwise mutilating the floor, as by the use of nails, screws or anchoring plugs for securing such strips in place. And it is to be remembered that the sockets provided by the flanges 14, 15 and lips 28, 29, not only supply holders for nailing strips of wood, but also constitute molds in which plastic or mastic materials may be spread to form a nailing medium for the reception of the carpet tacks.

In the form of device shown in Fig. 2, the flanges 14, 15, integrally formed with the baseboard members 12, 13, and provided with the lips 28, 29, answer the same purpose as the similarly designated parts in Fig. 1.

In office buildings, stores, hotels, clubs and other buildings, where carpeting to the walls is commonly employed, the use of the form of our invention, as shown in Fig. 1, in connection with partition walls and the use of the form of our invention, as shown in Fig. 2, in connection with side or permanent walls, is extremely advantageous as will be readily comprehended.

The integral, unitary construction in which the legs not only support the load of the wall and provide the ultimate base trim, but also provide an anchorage for nailing strip holders is highly useful and desirable. Separate base portions with their usual loose trim are entirely eliminated and many of the difficulties customarily encountered in the carpeting of hard surface flooring are removed.

Changes in the specific form of our invention as herein disclosed, may be made within the scope of what is claimed, without departing from the spirit of our invention.

Having described our invention, what we claim as new and desire to protect by Letters Patent is:

1. A baseboard structure comprising a channel-shaped member, the web thereof providing a rest to support a superimposed wall and the legs serving to carry said wall and provide finished base members at either side thereof, said legs being formed at the lower portions thereof with flanges to bear upon the floor under the weight of the wall, and means cooperating with said flanges for anchoring carpet nailing strips to said legs.

2. A baseboard structure including an exposed base member having a floor flange turned outwardly from the lower portion thereof, said flange having a lip turned upwardly at its outer edge, said flange and lip constituting a holder for receiving a carpet nailing strip and securing the same with respect to said member.

3. A baseboard structure comprising a channel-shaped member, the web thereof providing a rest to support a superimposed wall and the legs serving to carry said wall and to provide finished base members at either side thereof, said legs being formed at their lower portions with flanges to bear upon the floor, carpet nailing strips adapted to be seated upon said flanges and means turned up from the flanges for holding said strips against dislodgment therefrom.

ALBERT O. LARSON.
DON A. McLAREN.