Nov. 27, 1951 T. W. KUNZOG 2,576,610

RESTRICTER

Filed April 10, 1944

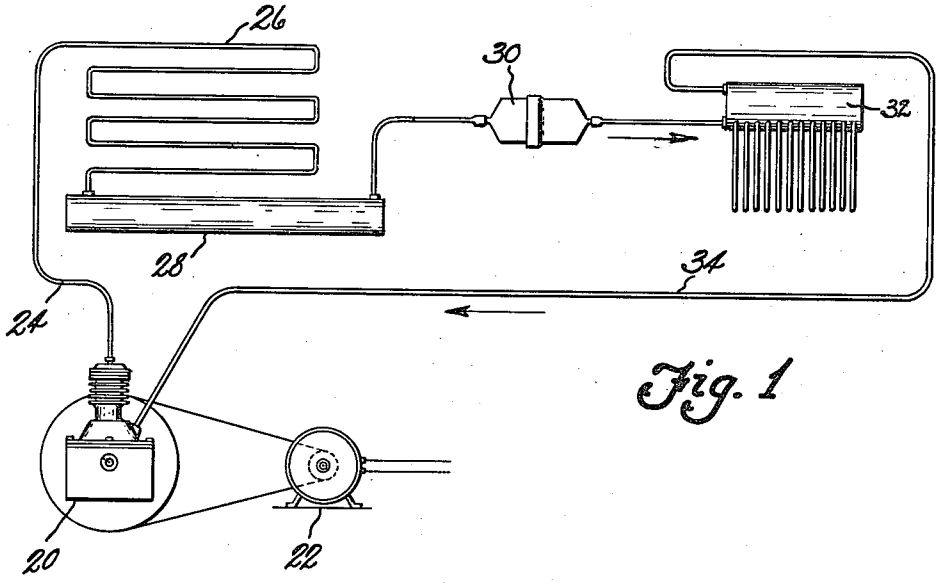


Fig. 1

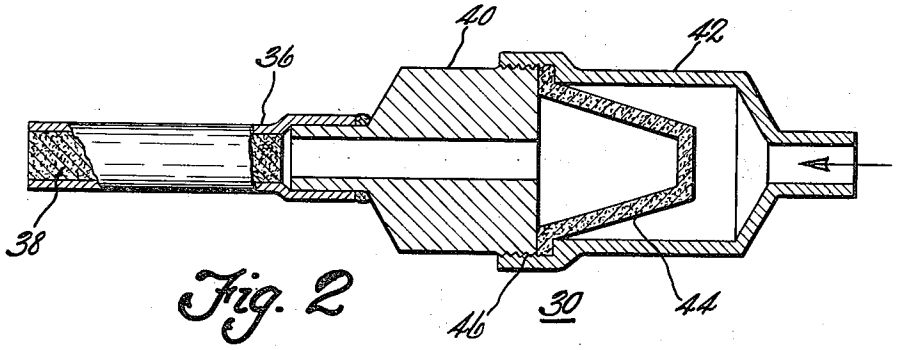


Fig. 2

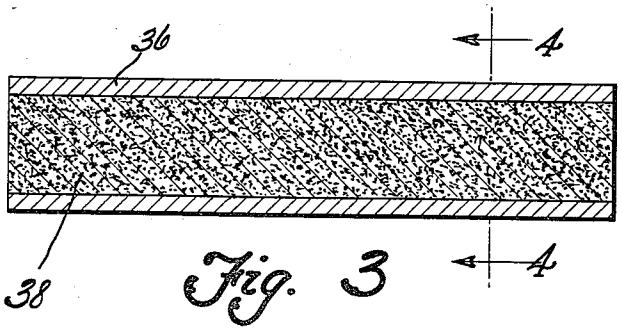


Fig. 3

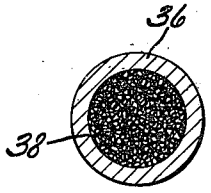


Fig. 4

INVENTOR
THEODORE W. KUNZOG
BY
Spencer Hardman & Fehr
HIS ATTORNEYS

Patented Nov. 27, 1951

2,576,610

# UNITED STATES PATENT OFFICE

2,576,610

## RESTRICTER

Theodore W. Kunzog, Dayton, Ohio, assignor to General Motors Corporation, Detroit, Mich., a corporation of Delaware

Application April 10, 1944, Serial No. 530,435

1 Claim. (Cl. 138—41)

1

This invention relates to expansion systems and is particularly concerned with restricters used in refrigeration systems.

It is the prime object of the invention to provide a restricter or metering device for a refrigeration system or the like that provides a multiplicity of capillary passages therethrough thereby eliminating the possibility of the restricter becoming inoperative due to clogging caused by extraneous matter passing therethrough.

In carrying out the above object it is a further object to form said restricter from sintered non-compacted metal powder which provides a multiplicity of tortuous, interconnecting passages of capillary size therethrough.

Further objects and advantages of the present invention will be apparent from the following description, reference being had to the accompanying drawings wherein preferred embodiments of the present invention are clearly shown.

In the drawings:

Fig. 1 is a diagrammatic view of a refrigeration system such as is used in a household refrigerator;

Fig. 2 is an enlarged sectional view of the restricter assembly used in the refrigeration system;

Fig. 3 is a view of the restricter per se on a greatly enlarged scale; and,

Fig. 4 is a section through line 4—4 of Fig. 3 showing a cross section of the restricter and indicating the multiplicity of capillary size passages through a section thereof.

Expansion systems, such as are used in household refrigerators include a restricter, or device of similar function which, due to the high pressure drop therethrough causes rapid expansion of the refrigerant that passes therethrough thereby creating the cooling effect in the evaporator. Heretofore these restricters have been made of several designs, such as a predetermined length of capillary tubing, and other similar types of designs all providing a capillary passage which presents a high back pressure and which permits tremendous expansion of the refrigerant that finally passes therethrough. The prior art restricters all have the same disadvantage namely, the restricter has a single passage which if clogged by an extraneous piece of dirt in the refrigerant causes the entire refrigerating system to become inoperative and which can not be dislodged without replacement of the restricter.

The present invention is directed to a restricter of unique design which due to the method by which it is formed produces a multiplicity of capillary passages having tortuous shapes which present the desired back pressure on the refrigerant and likewise due to the many capillary passages therein eliminates the prior art disadvantage due to clogging since if one or more of the passages are clogged it has little or no effect on the operation of the restricter because there are such a multitude of passages available. Further, since the passages are interconnecting the clogging of one or two passages at the entrance thereof does not necessarily change the pressure drop characteristics of the restricter since the remainder of passages which are not clogged at their entrances may be interconnected with the clogged passages.

2

My improved restricter is formed from sintered non-compacted metal powders, such as are described in the Davis Patent No. 2,157,596, and Olt Patent No. 2,273,589, both assigned to the assignee of the present invention. These powders when sintered in a non-compacted condition present a highly porous material, the porosity of which may be readily controlled by the grain size of the powders utilized, and in this connection any desired porosity may be obtained, the control of the porosity forming no portion of this invention since this control must necessarily change in accordance with the back pressure desired. In other words, the grain size and the length of the restricter together with its cross section definitely determines the pressure drop through the restricter and these factors are best determined by trial. Metal powders are available in any number of different grain sizes, for example, from 80 to 300 mesh and the restricter can be satisfactorily made from any of these metal powders if the proper balance in length and diameter for the grain size of powder is determined. In all cases the passages through the restricter are of capillary size.

Referring particularly to the drawings, Fig. 1 shows a diagrammatic hook-up of a refrigerating system such as is used in an ordinary household refrigerator.

In this system a compressor **20** is driven by an electric motor **22**, which is suitably controlled by a thermostatic device, not shown. The refrigerant compressed by the compressor **20** passes through a tube **24** into a condenser **26** which may or may not include a cooling fan in cooperation therewith. The refrigerant after becoming condensed flows into a receiver **28** where it is held under pressure by a restricter **30**. The portion of the refrigerant which passes through the restricter **30** due to the pressure thereon expands many times its volume at the outlet side of the restricter thereby causing the cooling effect which is obtained in the evaporator **32** after which the

refrigerant is returned through tube 34 to the compressor. This operation is cycled in accordance with operation of the compressor. In other words, when the thermostat calls for a lowering of the temperature in the evaporator, the motor starts and the compressor compresses the refrigerant which causes a flow through the restricter 30 whereby the evaporator is cooled due to an expansion of the refrigerant passing through the restricter 30. After the temperature has been lowered sufficiently to satisfy the thermostat the motor 22 is cut off and the system remains idle with a slower leakage of refrigerant through the restricter until the pressure is lowered on the high pressure side whereupon the temperature of the evaporator generally rises and requires another cycling of the motor and compressor unit.

The restricter 30 is shown in more detail in Fig. 2, wherein the restricter tube 36 is shown in partial fragmentary form whereby the porous metal 38 is visible therein. The tube 36 is sweated onto a tube 40 which preferably has a union joint with a second fitting 42. This union joint provides a clamping means for clamping a filter element 44 by its flanged portion 46 within the fitting 42. Filter 44 is formed from sintered non-compacted metal powder the same as the restricter, but due to its relatively thin cross section presents little back pressure, or restriction to flow therethrough. The refrigerant comes in through the inlet of the device and is filtered to prevent any extraneous matter getting into the restricter 36 per se.

Figs. 3 and 4 show the restricter portion on a greatly enlarged scale wherein the tube 36 which is preferably formed from copper and the porous metal 38 is bonded to the walls thereof due to the method of manufacture. In this instance a satisfactory restricter material may be bronze which is generally formed from bronze powder as described in the said Olt patent. The powder is filled into the tube 36 in the substantially non-compacted condition. The powder is preferably spherical in cross section and is from 80 to 150 mesh in size although other shapes of powder particles may be used. After the powder is filled into the tube 36 the assembly is placed in a sintering furnace where it is heated to a temperature in the neighborhood of from 1500 to 1600° F. for a period of about one-half hour under non-oxidizing conditions whereupon the metal powders sinter together to form a homogeneous porous bronze which is metallurgically bonded to the walls of the tube 36. This porous metal or porous bronze presents many hundreds of tortuous passages of interconnecting character therethrough which passages are all of capillary size. Thus, when a tube is utilized having a length, for example of 4", and an internal diameter of ¼", a considerable body of porous metal is provided which creates a high pressure drop therethrough but still permits a metered fluid flow therethrough.

Other metals can be used in the restricter, for example, the tube may be nickel, steel, bronze, stainless steel or the like and the porous metal may be copper coated iron, copper-nickel alloy, copper-zinc alloy or the like. In each case care must be taken to provide a material which is not in any way deleteriously affected by chemical action of the refrigerant. This is an important factor since, if any chemical action occurs between the material of either the tube or the porous metal and the refrigerant, the restricter may become valueless in a very short period of time. Then too, if any small quantity of moisture or oil gets in the refrigerant difficulty may be experienced if an chemical reaction is possible. Therefore, restricter materials should be chosen which are chemically non-reactive with the refrigerant or with the impurities found in the refrigerant.

While the embodiments of the present invention as herein disclosed, constitute preferred forms, it is to be understood that other forms might be adopted, all coming within the scope of the claims which follow.

What is claimed is as follows:

A device for use in connection with refrigeration systems and adapted to be included in the high pressure refrigerant line thereof comprising, in combination, an elongated cupreous metal tube having a constant relatively small cross section through an elongated portion of its extent and having a larger cross section adjacent one end thereof, said elongated portion of said tube comprising a restricter consisting of a sintered porous bronze mass made from sintered non-compacted metal powder and integrally metallurgically bonded throughout its entire contacting extent to the inner walls of said tube, said mass providing a multiplicity of longitudinally extending tortuous passages of interconnecting extent and of capillary size through said tube for causing a predetermined and desired pressure drop and resulting rapid expansion of refrigerant which has passed therethrough, a large diameter plate joined to said tube at the large cross section portion thereof and including a thread at its outer periphery, a cup member adapted to engage said threaded portion, said cup member having complementary threads thereon, and a porous bronze filter element made from sintered non-compacted metal powder of relatively thin cross section and of relatively large radial extent clamped between said cup member and said plate at the threaded portions thereof, said filter element being positioned adjacent the high pressure side of the restricter for removing extraneous particles from the refrigerant prior to their passage through the restricter.

THEODORE W. KUNZOG.

REFERENCES CITED

The following references are of record in the file of this patent:

UNITED STATES PATENTS

| Number | Name | Date |
|---|---|---|
| 1,687,780 | Neale | Oct. 16, 1928 |
| 1,947,586 | Fletcher | Feb. 20, 1934 |
| 1,957,828 | Greenwald | May 8, 1934 |
| 2,198,612 | Hardy | Apr. 30, 1940 |
| 2,220,641 | Davis | Nov. 5, 1940 |
| 2,290,734 | Brassert | July 21, 1942 |
| 2,297,817 | Truxell, Jr., et al. | Oct. 6, 1942 |
| 2,359,386 | Reinsch | Oct. 3, 1944 |