March 2, 1937. DE LOS E. HIBNER, JR 2,072,556

MEANS FOR PRODUCING A VARIABLE ORIFICE

Filed May 16, 1935

Fig. 1.

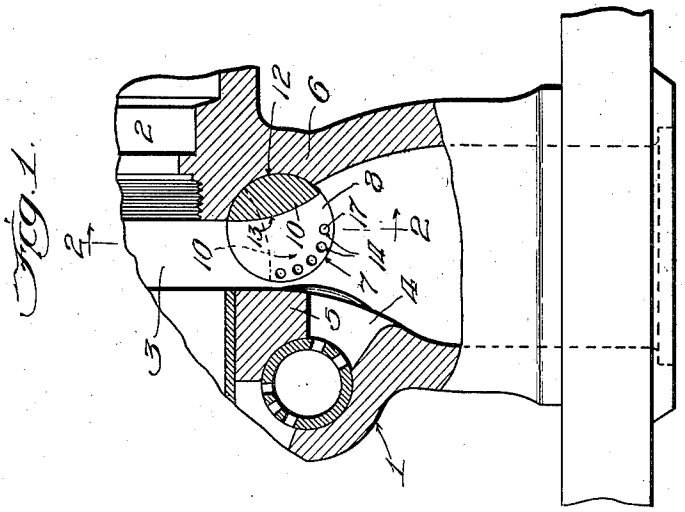

Fig. 3.



Fig. 2.

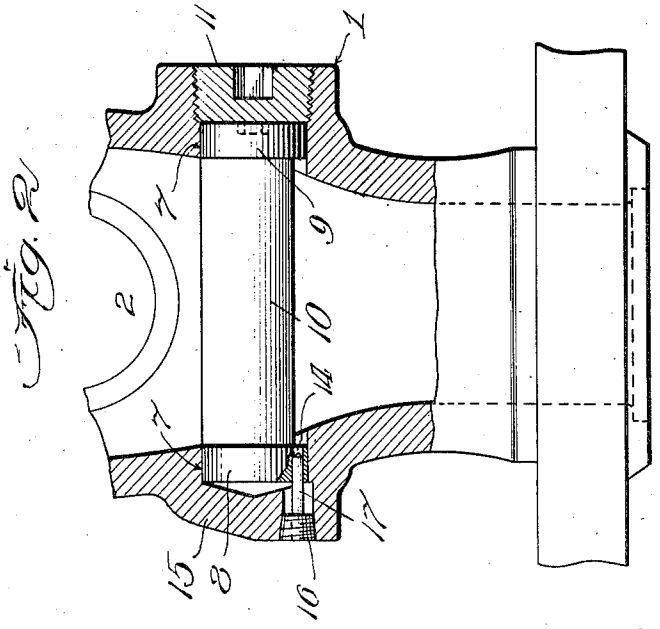

Inventor.
De Los E. Hibner, Jr.
by Wm. F. Frendenreich,
Atty

Patented Mar. 2, 1937 2,072,556

UNITED STATES PATENT OFFICE

2,072,556

MEANS FOR PRODUCING A VARIABLE ORIFICE

De Los E. Hibner, Jr., Du Bois, Pa., assignor to Vulcan Soot Blower Corporation, a corporation of Pennsylvania

Application May 16, 1935, Serial No. 21,758

4 Claims. (Cl. 138—46)

Efficient modern steam-generating power plants are provided with soot-blowing equipment to keep the heat transfer surfaces clean. The most successful soot blowers are those in which there is a tubular element adapted to discharge jets of steam against or across a surface to be cleaned; such tubular element being rotatably mounted at its outer end in a head located outside of the boiler setting. Steam is delivered to the head member of the blower unit and from there passes into the tubular discharge member. Conditions, of course, vary widely in different power plants so that care must be taken in order that there will be the proper steam pressure at the nozzles to insure the proper jetting action in each instance. Since it is impracticable to build a special blower head for each installation, it is necessary to provide means to adjust the same as occasion demands.

The main object of the present invention is to provide a blower head with a simple and novel means to vary the effective size of an orifice or passage through which the steam must pass in reaching the tubular cleaning element, whereby the steam pressure at the nozzles may be varied and accurately determined over a wide range.

In carrying out my invention I place in the throat of the blower head a member which may be set so as to leave the throat unobstructed or reduce its effective area to any desired extent. Therefore, viewed in one of its aspects, the present invention may be said to have for its object to provide the throat of a blower head or other conduit with a simple means for producing therein a variable orifice.

The various features of novelty whereby my invention is characterized will hereinafter be pointed out with particularity in the claims; but, for a full understanding of my invention and of its objects and advantages, reference may be had to the following detailed description taken in connection with the accompanying drawing, wherein:

Figure 1 is a view of a fragment of a blower head equipped in accordance with the present invention, partly in side elevation and partly in section; Fig. 2 is a view, also partly in elevation and partly in section, the section being on line 2—2 of Fig. 1; and Fig. 3 is a section on line 3—3 of Fig. 1.

Referring to the drawing, 1 is a hollow head into the lower end of which steam is adapted to be admitted. The head may be of the general type shown in the Arey Patent No. 1,979,136, of October 30, 1934, which delivers steam past a valve to a tubular blowing element mounted at one end in and projecting laterally from the upper portion of the head. Since they form no part of the present invention, neither the valve nor the blowing element are illustrated, although a fragment of the opening or passage therefor, leading outwardly from the chamber in the head, as indicated at 2, is shown. The chamber in the head, just below the opening 2, is contracted into the form of a broad, flat throat 3. Opening out of the chamber in the head, just below the throat 3, is a passage 4 leading to a pilot valve in the construction of the aforesaid patent. The broad walls 5 and 6 on opposite sides of the throat are parallel and are flat in the sense that the lines of intersection between a transverse plane and the inner faces of the walls 5 and 6 are straight lines. Therefore the walls 5 and 6 need not have plane inner faces and still be flat in the sense in which I use this word.

A cylindrical hole 7 is bored through one edge wall of the throat, across the throat, and into the opposite edge wall. This hole is preferably larger in diameter than the distance between the broad side walls of the throat, and its axis preferably lies nearer one of those walls than the other, as will hereafter be explained. An orifice-controlling member longer than the long transverse dimension of the throat, but somewhat shorter than the overall length of the bore 7, is movable into and out of the bore through the open end of the latter. This member has cylindrical end sections 8 and 9 and a connecting piece 10 in the form of a blade or vane. A plug 11 is screw-threaded into the open end of the bore and holds the orifice-forming member against removal. It will be seen that by turning the orifice-forming member about its axis, the part 10 thereof may be caused to reduce the effective cross-sectional area of the throat to any desired extent.

The outer wide face of the part 10 of the orifice-forming member preferably lies in the same cylindrical surface as do the peripheries of the ends 8 and 9. The cross-sectional contour of the part 10 is preferably so shaped that in one angular position of the orifice-forming member the part 10 is entirely housed in that part of the bore 7 which constitutes a recess or groove 12 in the wall of the throat nearest which the axis of the cylindrical bore lies; this being, in the arrangement shown, the wall 6. In this position of the orifice-forming member it leaves the throat in the head unobstructed, the inner face 13 of the part 10 taking the place of the face

of that part of the wall 6 that was cut away in creating the groove or recess 12.

In the drawing the orifice-forming member is shown in its idle position in full lines, whereas in dotted lines is shown the other extreme position which produces the smallest orifice. The part 10 may take any position intermediate between these full and dotted line positions.

It will be seen that it is a simple matter to adjust the orifice-forming member to reduce the effective cross-sectional area of the throat in the head to any desired size and then to secure said member against accidental displacement; thereby permitting the blowing element to receive steam under full pressure or under any predetermined lesser pressure.

For greater accuracy in adjustment of the orifice-forming member and greater security in locking it in place, means may be provided to necessitate a definite step by step adjustment and permit a positive locking of the device against rotation when in any position thus determined. In the arrangement shown, the inner cylindrical end section 8 of the device has a series of holes 14 extending through the same and distributed in the arc of a circle having its center at the axis of the cylinder. In the edge wall 15 in which the inner end of the bore 7 terminates, there is a screw plug 16 whose axis intersects the arc of the holes 14. This plug has a central pin 17 long enough to enter one of the holes 14 when they are brought in registration while the element 8 is seated in its bearing, the inner end of the bore 7.

It should be noted that the present invention is not a substitute for a valve to admit steam to the blower unit, since this must be done by the usual shut-off valve or other means; the purpose of my orifice-controlling device being to make it possible to adjust a head to suit various different conditions encountered in various power plants, without leaving it to the judgment or discretion of the operator how much steam should be turned on at any particular time in the life of an installed unit.

While I have illustrated and described with particularity only a single preferred form of my invention, I do not desire to be limited to the exact structural details thus illustrated and described; but intend to cover all forms and arrangements which come within the definitions of my invention constituting the appended claims.

I claim:

1. In combination, a conduit having aligned cylindrical openings in opposite sides thereof, an orifice-controlling member extending across the interior of the conduit and comprising cylindrical end portions fitted in said openings and an element in the form of a blade or vane connecting said end portions together, and means to lock the said member in any one of a considerable number of positions angularly of its axis, the blade or vane being of such width that it at no time completely closes off the conduit.

2. In combination, a conduit having aligned cylindrical openings in opposite sides thereof, an orifice-controlling member extending across the interior of the conduit and comprising cylindrical end portions fitted in said openings and an element in the form of a blade or vane connecting said end portions together, one of said cylindrical end portions having in its outer end face a series of holes arranged in the arc of a circle about the axis of said member, and a pin in the conduit in position to enter any one of said holes depending upon the angular position of said member.

3. In combination, a conduit having opposed flat parallel side walls and edge walls, each edge wall having a round opening aligned with the opening in the opposite edge wall, a member movable into and out of the conduit through one of said openings and comprising cylindrical end sections adapted to fit in said openings and a connecting blade or vane, a detachable plug to close the latter opening and hold the said member in the conduit, a second plug associated with the other opening, and interlocking elements on one end of said member and the second plug to lock the said member in any one of a plurality of angular positions.

4. In combination, a conduit having opposed flat parallel side walls and edge walls, there being a cylindrical bore of larger diameter than the distance between said side walls extending inwardly through one edge wall to and part way through the opposite edge wall, the axis of said bore being nearer one of said side walls than the other so that only one of these walls is recessed, a cylindrical member arranged in said bore and journalled at its ends in the said edge walls, the section of said member lying in the space between said edge walls being mutilated so that as the said member is turned about its axis the effective size of the passage through the conduit is varied, a detachable plug closing the open end of said bore, the inner end base of said member having therein a series of holes arranged in an arc of a circle about the axis of said member, a detachable plug in the edge wall at the closed end of said bore, and a pin on the latter plug in position to enter any one of the holes in said member depending upon the angular position of said member.

DE LOS E. HIBNER, JR.