(12) UK Patent Application (19) GB (11) 2 115 451 A

(21) Application No **8234716**
(22) Date of filing **6 Dec 1982**
(30) Priority data
(31) **8203806**
(32) **10 Feb 1982**
(33) **United Kingdom (GB)**
(43) Application published
7 Sep 1983
(51) **INT CL³**
E04F 11/16
(52) Domestic classification
E1D 150 2069 F126 LFS2
F4R 325 354 402 404 409
40Y 41Y 43Y AG
U1S 1716 1935 E1D F4R
(56) Documents cited
GB 1523901
GB 1481531
GB 1365765
GB 0633761
GB 0457516
GBA 2099036
(58) Field of search
E1B
E1D
F4R
(71) Applicant
G. A. Peacock,
Hallowsgate, Flat Lane,
Kelsall, Tarporley, County
of Chester
(72) Inventor
G. A. Peacock
(74) Agent and/or Address for
Service
J. Owden O'Brien and
Son,
53 King Street,
Manchester M2 4LQ

(54) **Illumination of flights of stairs**

(57) A stair tread comprises a stair nosing A formed with a horizontal treads having a non-slip insert, and a vertical flange b to project downwards over the stair tread rise and a moulding 1 formed with a notch or recess 2 at its lower end to accommodate an electric light bulb 3. In Fig. 6 (not shown) the moulding lies behind the flange which is slotted to emit the light.

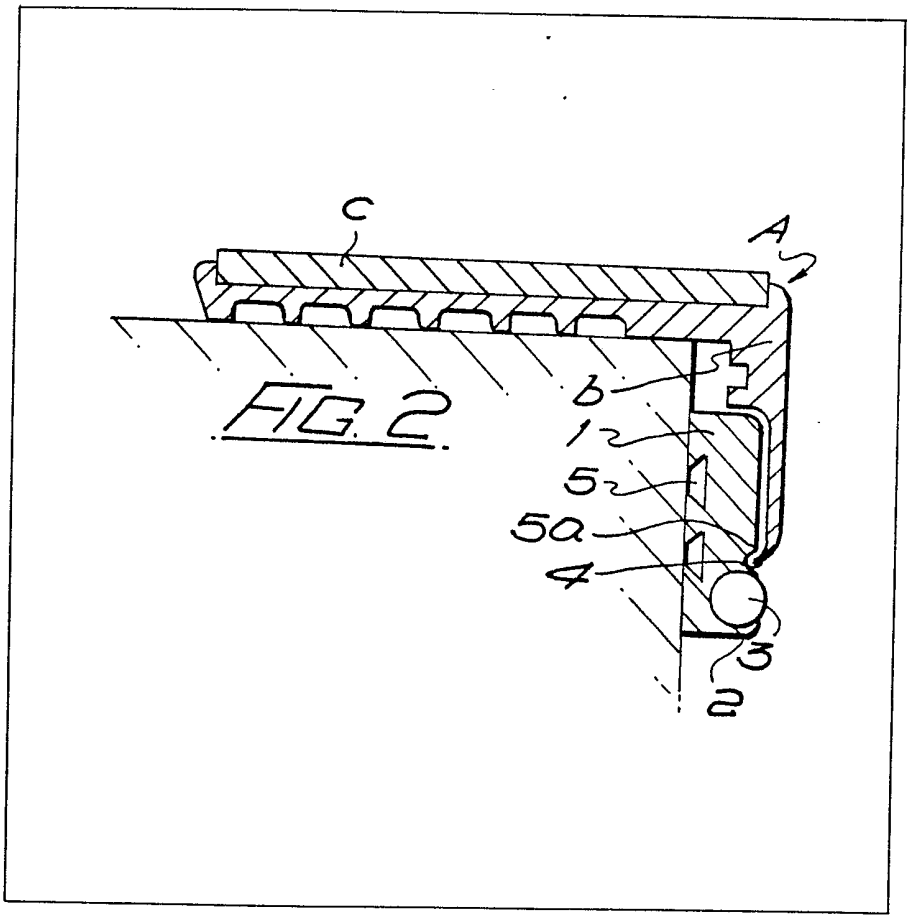

FIG. 2

GB 2 115 451 A

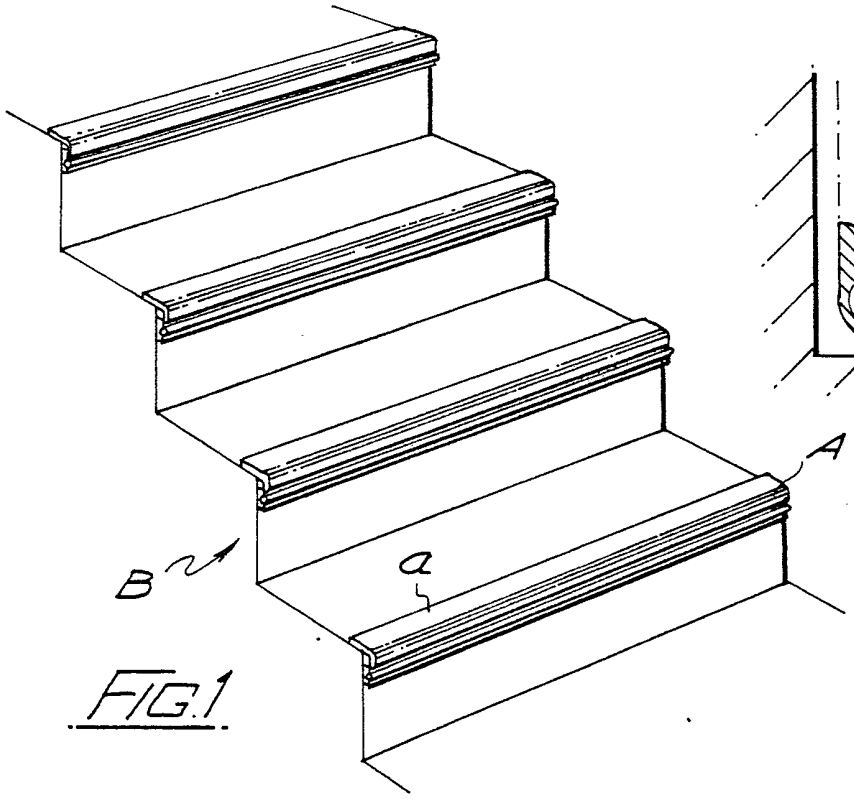

FIG.1

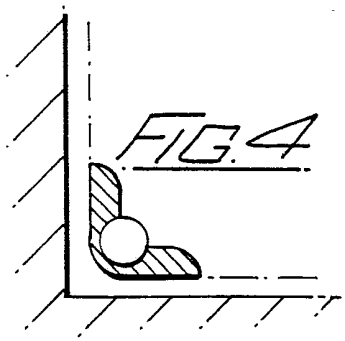

FIG.4

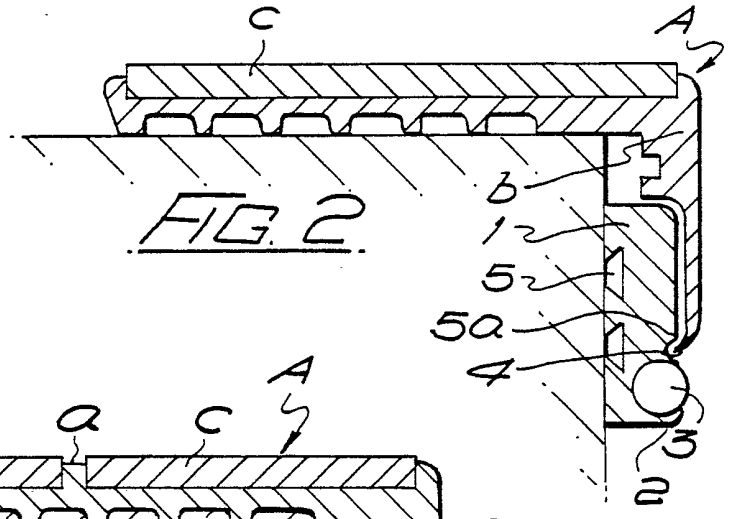

FIG.2

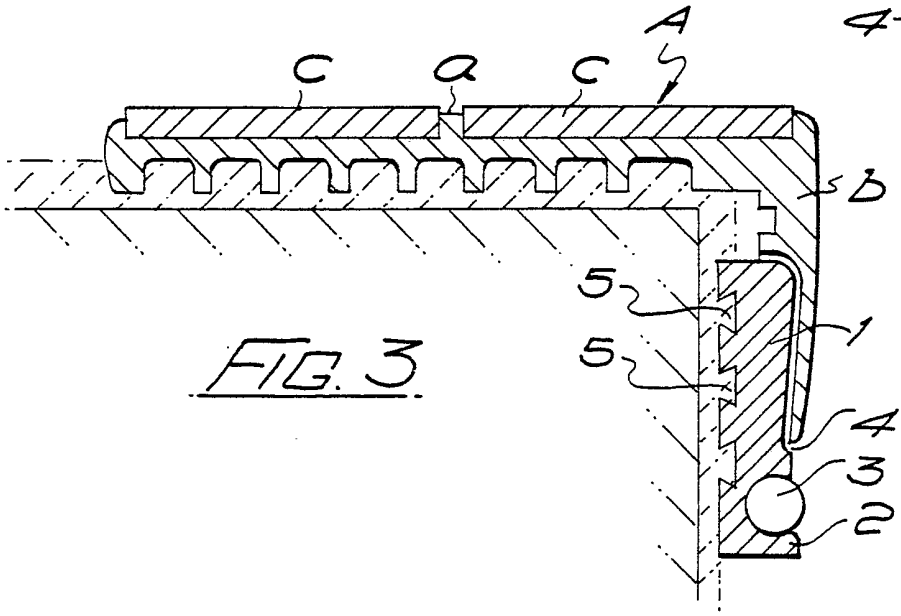

FIG.3

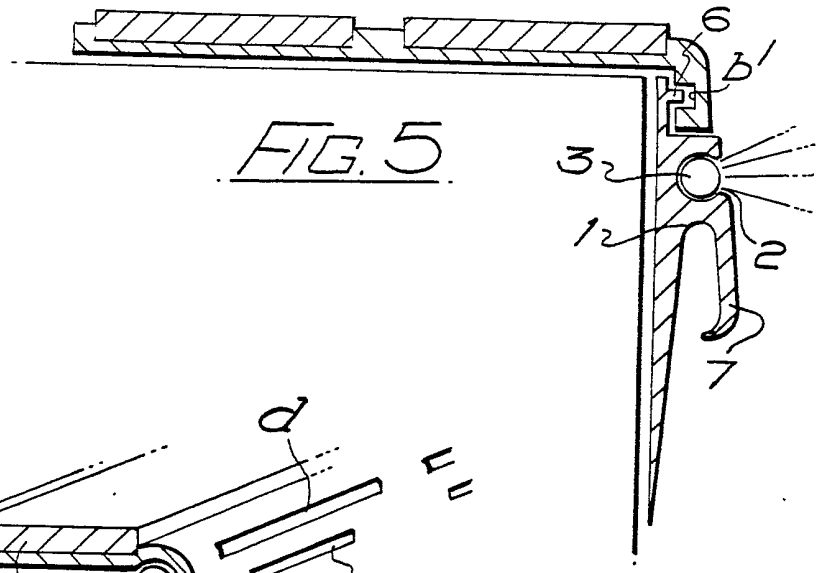

FIG. 5

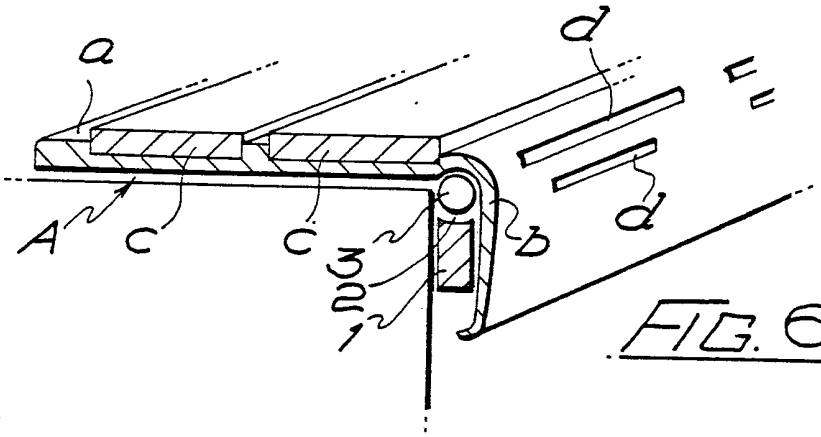

FIG. 6

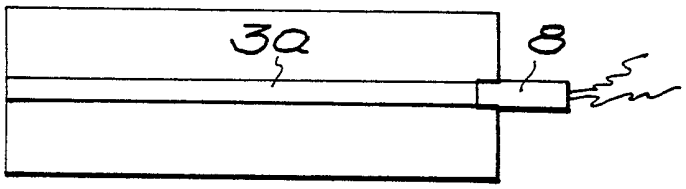

FIG. 7

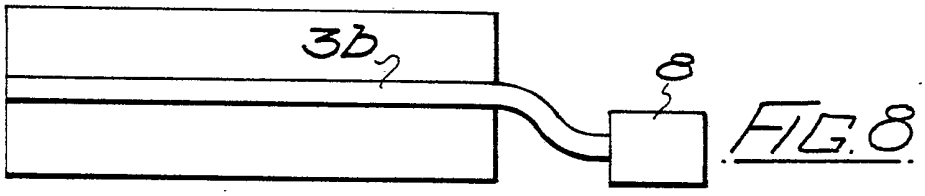

FIG. 8

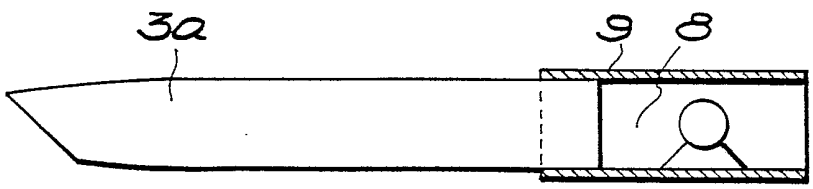

FIG. 9

SPECIFICATION

Improvements in the illumination of flights of stairs

This invention relates to improvements in the illumination of flights of stairs.

The object of the invention is to provide illumination for stair treads.

A single moulding stair nosing has been proposed bearing a first portion to fit on the top of a step nose and a second portion to fit over the front of the step nose, the first portion having a reduced-slip upper surface area and the second portion being adapted to be illuminated. Such a combination has been found to be unsatisfactory as flights of stairs differ considerably and in order to limit the number of different units required to be stocked the formation of the unit as two independent mouldings enables assembly on a staircase to be carried out irrespective of the shape or of the angle of slope of the riser to the vertical.

According to the invention a lighting unit for illuminating the stair treads of a flight of stairs comprises the combination of a stair tread moulding and a second moulding (for attachment to a stair riser) formed with a groove or recess to house a lighting unit adapted to light a step of a staircase.

The invention will be described with reference to the accompanying drawings:—

Fig. 1 is a perspective view of a staircase,

Fig. 2 is a vertical section of one form of housing and lighting unit,

Fig. 3 is a similar section of a modified construction,

Fig. 4 is a vertical section of a lighting unit mounted along the junction of a stair tread and riser,

Figs. 5 and 6 are vertical sections of further stair treads and lighting units.

Figs. 7 and 8 are front views of stair risers illuminated by optical cables the stair nosings being omitted for clarity.

Fig. 9 is a detail view of the illumination of a glass or plastic rod or tube.

A stair nosing A such as that sold under the R.T.M. Ferodo is formed as a moulding with a horizontal tread *a* and a vertical flange *b* to project downwards over the riser of the stair and to project forwardly therefrom to house a second moulding or bracket 1 formed with a notch or recess 2 to house a lighting unit 3 which may comprise fluorescent tube or incandescent lamps or mercury lamps etc.

The moulding or bracket 1 is preferably rectangular with the notch or groove to house a lighting unit 3 which may be in the form of a tube of a plastics material to house a plurality of electric bulbs connected in series or parallel — protection from damage by the plastics tube. The tube may be removed from the moulding 1 and replaced.

In a further arrangement a neon or fluorescent tube may be enclosed in the plastics tube. In both arrangements the electric wiring may also pass along the notch or groove.

As shown in Fig. 4 the moulding 1 may occupy the angle between the step or tread of a stair case B and the riser.

In Figs. 2 and 3 the moulding 1 is formed with a locking groove 4 to receive a lip 5*a* along the lower edge of the nosing flange *b* and with a further groove or grooves 5 to receive adhesives for securing the moulding to the stair riser, it may alternatively or additionally be secured by screws.

A non-slip insert may be applied to the nosing A in known manner.

In Fig. 5 the moulding 1 is formed with a rib 6 to engage a slot *b'* in the flange of the nosing to allow the moulding to pivot and be secured to a non-vertical riser and is provided with a defining member 7 acting as a carpet grip.

In Fig. 6 the moulding 1 is located behind the flange *b* of the nosing and the light from the lighting unit in the groove 3 is visible through slots *d* in the nosing A.

The lighting unit shown in Fig. 7 is provided by a glass or plastics rod 3*a* connected at one end to a light source 8 housed in a metal tube 9 affixed to the glass or plastics rod 3*a* as shown in Fig. 9.

As shown in Fig. 8 the lighting unit is a fibre optic cable 3*b* which may be connected to a light source 8 remote from the stair nosing.

A trunking with a clip may be provided up the side of the staircase to house the leads for the lighting units. The bracket 1 may be provided with a projecting tong to extend along the surface of the step under the carpet.

CLAIMS

1. A lighting unit for illuminating stair treads of a flight of stairs comprising the combination of a stair tread moulding and a second moulding, for attachment to a stair riser, formed with a grooved or recess to house a light unit adapted to light a step of a stair case.

2. A lighting unit as in claim 1, in which the second moulding is formed with a groove to receive a lip along the lower edge of the nosing and with a further groove or grooves adapted to receive adhesives for securing the moulding to a stair riser.

3. A lighting unit as in claim 1, in which the second moulding is adapted for mounting between a stair tread and a riser.

4. A lighting unit as claimed in claim 1, in which the second moulding is formed with a rib to engage a slot in the nosing to allow the moulding to pivot and be attached to a non-vertical riser.

5. A lighting unit as in claim 1, in which the second moulding is located when in use behind the stair nosing and the light from the lighting unit is visible through slots in the nosing.

6. A lighting unit as in claim 1, in which the lighting unit comprises electric lamps mounted in a plastic tube for insertion in the groove or recess.

7. A lighting unit as in claim 6, in which the lighting unit is a glass rod connected to a metal tube housing an electric light bulb.

8. A lighting unit as in claim 1, in which the lighting unit comprises a fibre optic cable connected to a light source.

9. A lighting unit for illuminating the stair treads of a flight of stairs substantially as described with reference to the accompanying drawings.

New claims or amendments to claims filed on 7 June 1983.

Superseded claims 1—9.

New or amended claims:—

1. A unit for illuminating a step comprising a combination of a stair tread moulding and a second moulding, the second moulding being formed with a recess accommodating a lighting unit, and, in use, being clamped adjacent a stair riser by a downward flange on the stair tread moulding.

2. A unit as claimed in claim 1, in which the second moulding is formed with a groove to receive a lip along the lower edge of the downward flange of the stair tread moulding.

3. A unit as in claim 1 or 2 in which the second moulding is formed with a further groove or grooves adapted to receive adhesives for securing the moulding to a stair riser.

4. A unit as claimed in claim 1, 2 or 3 in which the second moulding is formed with a rib to engage a slot in the stair tread moulding to allow the second moulding to pivot and be attached to a non-vertical riser.

5. A unit as claimed in claim 1, in which the second moulding is, when in use, behind the downward flange of the stair tread moulding and the light from the lighting unit is visible through slots in the stair tread moulding.

6. A unit as claimed in any preceding claim, in which the lighting unit comprises electric lamps mounted in a plastics tube inserted in the recess in the second moulding.

7. A unit as claimed in any of claims 1 to 5, in which the lighting unit is a glass rod connected to a metal tube housing an electric light bulb.

8. A unit as claimed in any of the claims 1 to 5 in which the lighting unit comprises a fibre optic cable connected to a light source.

9. A unit for illuminating a step substantially as hereinbefore described with reference to and as illustrated in Fig. 2, or Fig. 3, or Fig. 4, or Fig. 5 of the accompanying drawings.

Printed for Her Majesty's Stationery Office by the Courier Press, Leamington Spa, 1983. Published by the Patent Office 25 Southampton Buildings, London, WC2A 1AY, from which copies may be obtained.