Jan. 28, 1941. S. F. WREAD 2,229,909

LOCK FOR OVERHEAD DOORS

Filed March 15, 1937 2 Sheets-Sheet 1

Fig. 1.

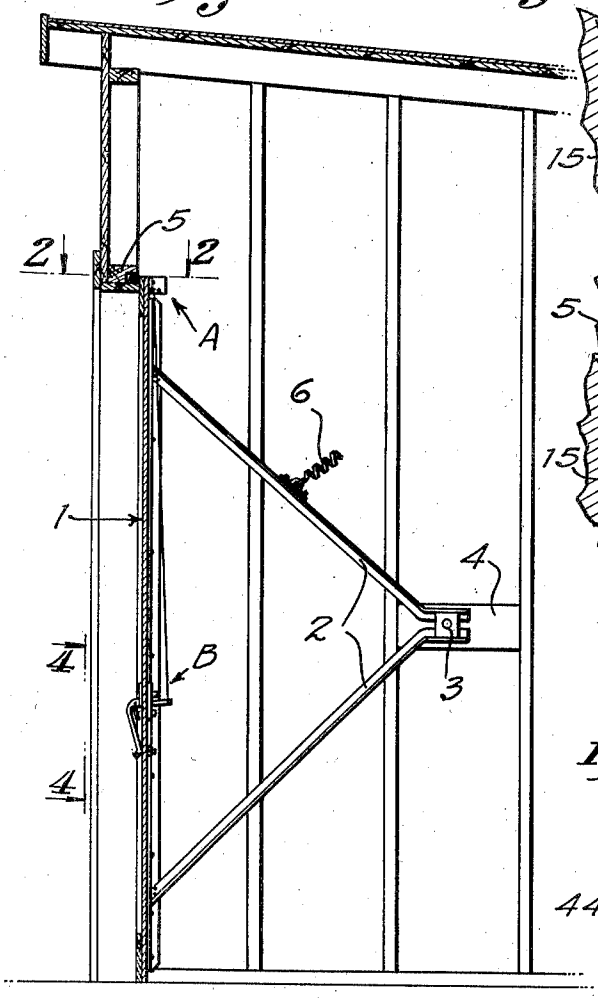

Fig. 2.

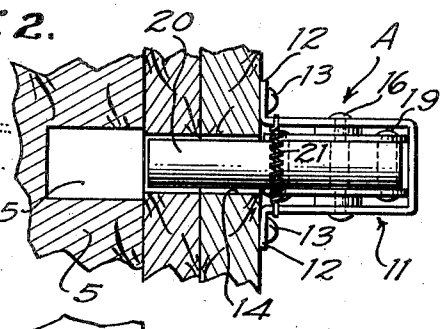

Fig. 3.

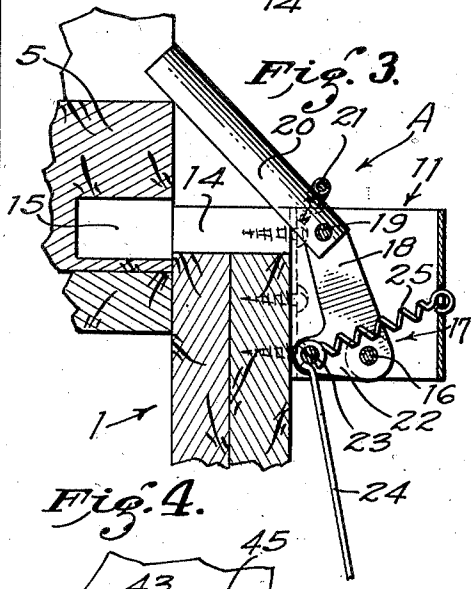

Fig. 4.

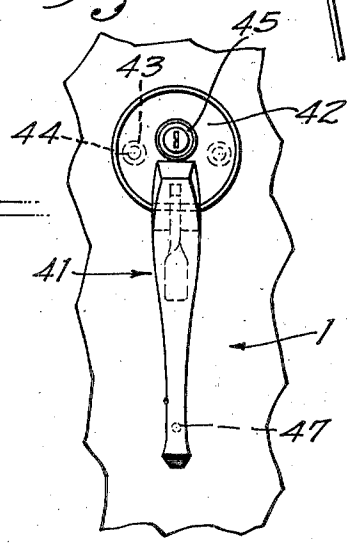

Fig. 5.

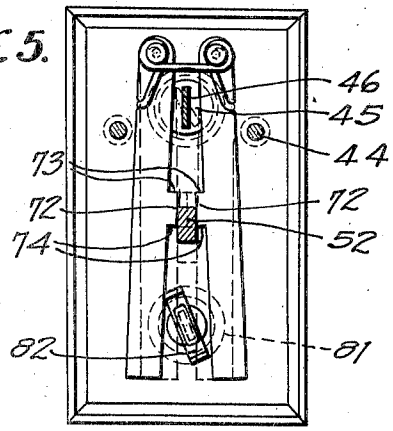

INVENTOR
Spencer F. Wread
BY
E. D. Larrabee
his ATTORNEY.

Jan. 28, 1941. S. F. WREAD 2,229,909

LOCK FOR OVERHEAD DOORS

Filed March 15, 1937 2 Sheets-Sheet 2

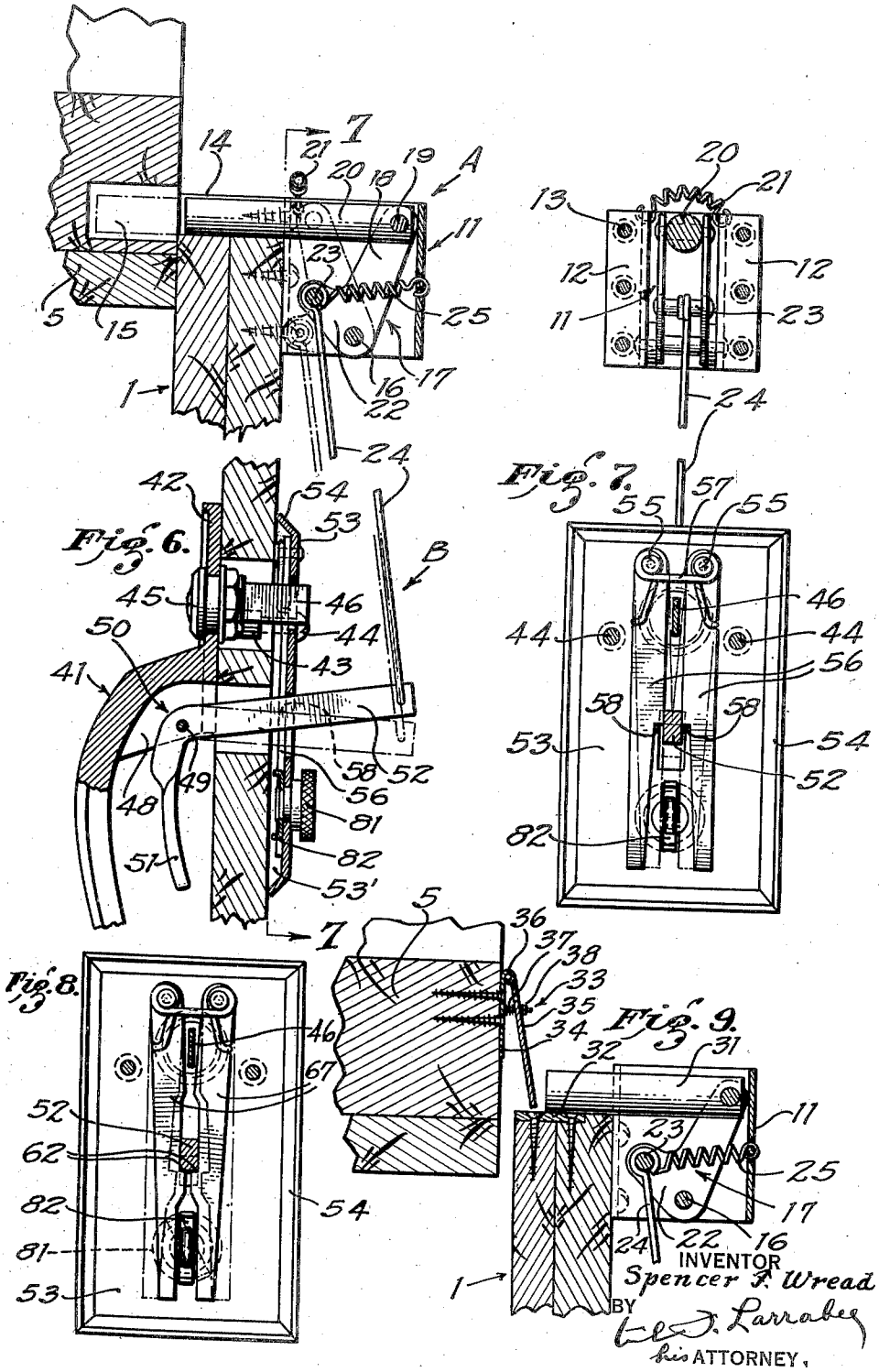

Patented Jan. 28, 1941 2,229,909

UNITED STATES PATENT OFFICE

2,229,909

LOCK FOR OVERHEAD DOORS

Spencer F. Wread, Los Angeles, Calif.

Application March 15, 1937, Serial No. 130,898

10 Claims. (Cl. 70—148)

My invention relates to door locks, more particularly to locks for doors such as garage doors of the overhead type.

An object of my invention is to provide a novel door lock which is particularly designed for doors of the overhead type and which doors are arranged to move to an overhead position about a horizontal axis.

An object is to provide a novel door lock which incorporates a novel bolt adapted to coact with the header or cross member of the door jamb rather than the side members thereof, and further, incorporates a structure in which the operating mechanism requires only half or less of the door's height and thus facilitates the installation of the door lock on exceptionally wide doors.

An object is to provide a novel door lock which incorporates a novel safety device, whereby should the lock be in locking position and the door moved to closed position, no damage may occur either to the door, the door jamb, or to the lock itself.

Another object is to provide a novel door lock, which though designed for large and heavy doors, is so arranged that it may be unlocked with a key with only a nominal effort, reducing to a minimum, thereby, danger of breaking keys in the lock in the operation of releasing the same from locking position.

Another object is to provide a novel door lock of the above character which may be easily and quickly installed by inexperienced persons and without the requirement of special tools.

A still further object is to provide a novel door lock in which all screws or other securing means for the lock and its associated hardware are inaccessible from the outside of the door.

A still further object is to provide a novel door lock which may be readily operated with one hand and which may be easily and quickly locked and unlocked from the inside or outside of the door.

A still further object is to provide a novel door lock having a compact bolt unit, and a compact handle and locking unit connected solely by a tension member which is capable of being coiled into a small area, thereby providing a door lock, although designed for large doors, which may be packed into a small space for shipment.

Another object is to provide a novel door lock for overhead doors that will automatically lock when the door is moved to closed position, and which lock may be released from the inside of the door without requirement of any special device, such as a key, and which lock may be unlocked from the outside of the door by the use of key means.

Another object is to provide a novel door lock for overhead doors whereby a solid or unitary outer handle construction is provided that is secured to the door from the interior thereof, and which has associated therewith an operating lever that is adapted to lock or unlock the draw bolt of the locking mechanism for said doors.

Another object is to provide a novel door lock for overhead doors in which the lock or latch means are mounted in the inside of said doors and which means may be operated to unlatch or unlock the same from the interior of said doors, and which may also be operated by key controlled means for unlatching the same from the exterior of said doors.

Other objects, advantages and features of invention may appear from the accompanying drawings, the subjoined detail description and the appended claims.

The accompanying drawings illustrate the invention in some of the forms I at present deem preferable.

Figure 1 is a vertical sectional view of an overhead garage door associated with an opening in a garage, a fragment of which is shown and which door has my novel lock installed thereon.

Fig. 2 is an enlarged fragmentary plan view of the bolt structure taken on line 2—2, Fig. 1 with adjacent portions of the door and door jamb shown in section and with the bolt in unlocking position.

Fig. 3 is a fragmentary sectional view on enlarged scale and showing the bolt in the position it would assume in the event the bolt was extended to locking position before the door was closed.

Fig. 4 is a front elevational view on enlarged scale of the operating handle and escutcheon plate taken substantially on line 4—4, Fig. 1 and a portion of the door being fragmentarily shown.

Fig. 5 is a sectional view taken on a plane substantially indicated by line 7—7, Fig. 6, showing one form of dogging means with the same moved to open position showing in dotted lines a moved position of the dogging means.

Fig. 6 is a longitudinal sectional view showing the latch bolt and handle units and associated parts of the door and header being fragmentarily shown. Parts are broken away to contract the view; and dot and dash lines indicate the parts when in locking position.

Fig. 7 is a sectional view taken on line 7—7, Fig. 6, and showing one type of dogging means

and showing in dot and dash lines the parts being moved to locking position.

Fig. 8 is a sectional view of a latch keeper construction of a modified form of dogging means and on the same plane as indicated in Fig. 7.

Fig. 9 is a fragmentary sectional view analogous to the upper portion of Fig. 6, but showing a modified form of latch means.

The door with which my present invention is particularly designed for use comprises the door proper, designated 1, at the sides of which are converging arms 2 joined together at a point slightly above the middle and rearwardly of the door, where the arms 2 are mounted to rotate about a journal 3 fastened to the side of the building 4 or to any suitable support. The door is adapted to swing upwardly and rearwardly in an arc to a horizontal position, not shown, above and resting at its lower edge on the underside of the door frame header 5. Suitable counterbalance means are provided in the form of a spring 6, a fragment of which is shown, and which is connected at its other end to the rafters of the building.

At the top of the door, preferably in the middle, is mounted a bolt unit A. The bolt unit includes a U-shaped housing 11 of sheet material open at its upper and lower sides and provided with outwardly directed flanges 12 at the extremities of its leg portions which are adapted to receive screws 13 for securing the housing at the inner side of the door with the upper extremity of the housing substantially flush with the upper edge of the door as shown best in Figs. 3 and 6.

Opposite the housing the upper edge of the door is notched to form a channel 14, and in alinement with the channel, the header 5 of the door frame is provided with a socket 15. Journaled at the lower middle portion of the housing 11 by means of a pin 16 is a pair of bell-crank levers 17 having upwardly extending major arms 18 reaching to the upper end of the housing and pivotally attached by a pin 19 to the rear end of a cylindrical bolt 20. The bolt 20 is adapted to rest in the channel 14.

In order to hold the bolt 20 in its channel, there is provided a retainer spring 21 which bridges the upper forward corner of the housing. Thus, should the bolt be extended when the door is open and then the door swung closed, the bolt upon contacting the header or other obstruction, as shown in Fig. 3, is free to tilt upwardly; however, upon again opening the door, the retainer spring returns the bolt to its proper position.

The bell-crank levers 17 are provided with upwardly extending minor arms 22 which receive at a point forwardly of the pin 16 a journal pin 23. To the journal pin 23 is attached one end of a flexible tension link 24 which extends downwardly to the lock and handle unit B, to be described hereinafter. Also attached by one end to the journal pin 23 is a spring 25 the other end of which is anchored in the rear of the housing 11.

In Fig. 9 is shown a modified form of bolt unit A'. In this construction, a cylindrical bolt 31 of shorter length is substituted for the bolt 20. On top of the door 1 is positioned a keeper plate 32 with its forward edge flush with the forward edge of the door. Mounted on the header 5 above the keeper plate is a latch member 33 in the form of a leaf hinge having leaves 34 and 35 journaled at their upper ends 36. Leaf 34 is secured to the header, while the leaf 35 normally overhangs the keeper plate, being urged thereover by a spring 37, and limited in its extended position by the head of a retainer pin 38. In operation, the bolt 31 forces the normally overhanging leaf 35 clear of the keeper plate so that the door is free to swing upwardly.

I will now set forth the construction of the handle and lock unit, designated generally by B.

Mounted on the front of the door vertically below the bolt unit A is a handle fitting 41 which preferably is made rugged in construction. The handle 41 is provided at its upper end with a circular escutcheon plate or flange 42 provided with bosses 43 extending from its back side to receive screws 44 that extend thereinto from the inside of the door. Secured in the escutcheon plate is a suitable key operated lock unit 45 having a turnable, key operated blade 46 adapted to extend through the door.

The handle fitting 41 curves downwardly and outwardly from the escutcheon then returns to the door front at its lower end which receives from the back side at its lower end a screw 47. The upper portion of the handle fitting 41 is provided between the handle and the door with an upwardly directed recess 48 in which is journaled by a pin 49 an L-shaped latch or operating lever 50. One arm of the pivotally mounted lever extends downwardly between the handle element and door to form an operating trigger 51; while the other arm 52 is in the form of a bar of rectangular section and extends through the door to form a latch member or element and locking bolt operating connection. The inner extremity of the latch element 52 is secured to the lower end of the tension link 24.

Held to the back side of the door by means of the screws 44 is a rectangular escutcheon plate 53 formed of sheet material with inturned margins 54 so that the body of the plate is spaced from the door and forms therewith a flat chamber 53'. Journaled near the upper end of the plate 53 on pins 55 is a pair of depending bars 56 formed of flat material and positioned edge to edge and which form dogging means for the operating lever 50. A spring 57 is hooked around the pins 55 and is provided with extremities which engage the outer edges of the bars 56 so as to force the free extremities of the bars toward each other.

As shown in Fig. 7 the dogging means extend on the opposite sides of the arm 52 of the latch element 50 and their adjacent edges are relieved from a point opposite the arm 52 downwardly to form shoulders 58. When the arm 52 is lowered below the shoulders 58, the dogging means are free to move toward each other to prevent raising of the arm 52 until the bars 56 of the dogging means are spread apart. Inasmuch as the operating lever 50 is so connected with the bolt 20 as to urge the bolt into engagement with its keeper socket 15 when the arm 52 is lowered, the dogging means 56 serve to restrain the bolt 20 in its locked position.

The structure shown in Fig. 9 operates in just ther everse of the foregoing arrangements; that is an upward, instead of a downward movement of the arm 52 urges the operating bar 31 against the latch member 35 so as to force the same inwardly to unlock the door. Consequently, as shown in Fig. 8, modified dogging means 67 may be employed in which their mid portions are relieved to form upwardly directed shoulders 62 arranged to pass under the arm 52 as shown by solid lines to prevent its lowering until the dog-

ging means 67 are spread apart. When the pull on operating trigger 51 is released the tension of spring 25 will pull element 52 upwardly so as to cause shoulders 62 to engage the underside of element 52.

Also, as shown in Fig. 5, a further modification of the dogging means, designated 71 may be employed. In this case lugs 72 extend toward each other from the mid portions of the dogging means to form upwardly directed shoulders 73 and downwardly directed shoulders 74. With this arrangement either type of bolt shown in Figs. 3 and 9 may be employed.

In the event the dogging means as shown in Fig. 5 are used and the type of bolt unit A shown in Figs. 2 and 3 is used, the operation of locking and unlocking the door will be the same as though the construction of the dogging means shown in Fig. 7 were used. However, if the bar 52 is moved upwardly above the shoulders 73, such movement will act similarly to a dead bolt so that the latching bolt 20 cannot be operated until the element 52 is released. This same advantage of preventing locking of the door will be obtained when the bolt unit A' is used and the arm 52 is moved below the shoulders 74.

Regardless of the arrangement of dogging means employed, the operating blade 46 of the key controlled lock unit 45 extends between the bars or arms of the dogging means above the arm 52 so that upon turning of the blade, in either direction, the bars of the dogging means may be spread apart to release the arm 52 of the operating lever 50.

In order to open the lock from the inside, there is journaled at the lower end of the escutcheon plate 53 a knurled knob 81 which extends into the plate 53 and is there provided with a double ended spreader lever or cross pin 82 which fits between the bars 56, 61 or 71 of the dogging means so as to spread them when the knob 81 is turned in either direction to release the arm 52 of the latch element 50.

From the foregoing it will be seen that the construction shown in Figs. 6 and 7 does not latch or lock the door when the door is moved to closed position, but provision is made by such construction whereby the door may be locked or unlocked. In Fig. 9 the construction is such that unless the member 52 is held in inoperative position as hereinbefore described, the door will be automatically latched or locked when the same is moved to closed position.

An advantage in my novel construction is obtained in that the lock construction may be easily and quickly changed to adapt the same for various sizes of a pin tumbler or paracentric type lock as desired, and in the event a lock having a greater diameter is desired to be used than originally intended to be received in the flange 42, the opening through which the lock 45 is mounted may be easily enlarged by a drilling operation.

From the foregoing construction I have provided a door lock for overhead doors which may be quickly installed at a minimum expense whereby a substantial construction that provides a secure and fully protective lock may be associated with an overhead door and which may be shipped in a compact arrangement due to the flexible connection 24 and the simplicity and compactness of the other parts of the lock construction.

A further advantage is obtained by my novel construction of lock unit B in that the dogging means 56 or 61 are pivoted at their upper ends and the gravity action of such means 56 or 61 enables me to use a light spring 57 merely to insure positive action, and by such use of a light spring 57 and the gravity action of the dogging means, breakage of keys is reduced to a minimum because only a slight exertion is required thereon to spread the dogging means apart to release the member 52.

I claim:

1. In a bolt structure for a door rotatable about a horizontal axis offset from the plane of the door, a bolt; means for reciprocating said bolt across the upper edge of said door; and yieldable means for restraining said bolt to a reciprocable movement, said means permitting lateral displacement of said bolt upon encountering an obstruction.

2. In a bolt structure for a door rotatable about a horizontal axis offset from the plane of the door, a bolt; means for reciprocating said bolt across the upper edge of said door; yieldable means for restraining said bolt to a reciprocable movement, said means permitting lateral displacement of said bolt upon encountering an obstruction; a link extending downwardly from said reciprocating means; a latch element supported by the door and jointed to said link for operating said bolt; and keeper means for restraining said latch element.

3. In a bolt structure for a door rotatable about a horizontal axis offset from the plane of the door, a bolt; means for reciprocating said bolt to locking and unlocking positions; yieldable means for restraining said bolt to a reciprocable movement, said means permitting lateral displacement of said bolt upon encountering an obstruction; an operating mechanism for said bolt carried by the door and including a latch element, dogging means for restraining said latch element; means for engaging said dogging means to release said latch element; and a link operatively connecting said latch element with said reciprocating means.

4. In a bolt structure for doors, the combination with a door and coacting jamb, of a bolt member mounted to move transversely across the edge of the door; and means yieldably restraining said bolt member against lateral movement away from the edge of the door.

5. In a bolt structure for doors: a housing secured to the margin of the door, said housing being open on at least one side; a bolt extending along said open side; a fixed guide at one side of said bolt; and a restraining means at the other side thereof yieldably holding said bolt against said fixed guide.

6. In a bolt structure for doors; a housing secured to the margin of the door, said housing being open on at least one side; a bolt extending along said side; a fixed guide at one side of said bolt; a restraining means at the other side thereof yieldably holding said bolt against said fixed guide; a lever mounted in said housing for reciprocating said bolt; a spring tending to hold said bolt in a retracted position; a tension link extending from said lever; a handle latch connected with said link; dogging means for restraining said handle latch; and means for releasing said dogging means from said handle latch.

7. In a bolt structure for doors, comprising a housing secured to the upper margin of a door, said housing being open on at least one side; a bolt extending along said open side; a fixed guide

at one side of said bolt; and a restraining means at the other side thereof yieldably holding said bolt against said fixed guide.

8. In a bolt structure for a door rotatable about a horizontal axis offset from the plane of the door, a housing secured to the upper margin of the door, said housing being open on at least one side; a bolt extending along said open side; a fixed guide at one side of said bolt; a restraining means at the other side thereof yieldably holding said bolt against said fixed guide; a lever mounted in said housing for reciprocating said bolt; a spring tending to hold said bolt in a retracted position; a tension link extending from said lever; a handle latch connected with said link; latch means for restraining said handle latch; and means for releasing said latch means from said handle latch.

9. In a door lock: a door handle secured to a door and spaced therefrom at its mid portion; a latch lever journaled between the handle and door and having an arm projecting through the door; dogging means mounted at the inner side of the door; yieldable means urging said dogging means against said arm, said dogging means having catch portions engageable to restrain movement of said arm; and key controlled blade means to release said dogging means from said arm.

10. In a bolt structure for a door rotatable about a horizontal axis offset from the plane of the door, a housing secured to the upper margin of the door, said housing being open on at least one side; a bolt extending along said open side; a fixed guide at one side of said bolt; a restraining means at the other side of said bolt yieldably holding said bolt against said fixed guide; a latch lever positioned at the mid portion of the door at the outside thereof and below said bolt; said latch lever including an arm extending through the door; link means operatively connecting said arm with said bolt; dogging means mounted at the inner side of the door; yieldable means urging said dogging means against said arm, said dogging means having catch portions engageable to restrain said arm; and means to release said dogging means from engagement with said arm.

SPENCER F. WREAD.