W. H. SEABROOK, JR.

GUN SHIELD FOR PORTABLE GUNS.

APPLICATION FILED MAY 17, 1916.

1,247,457.

Patented Nov. 20, 1917.

3 SHEETS—SHEET 1.

Fig. 1.

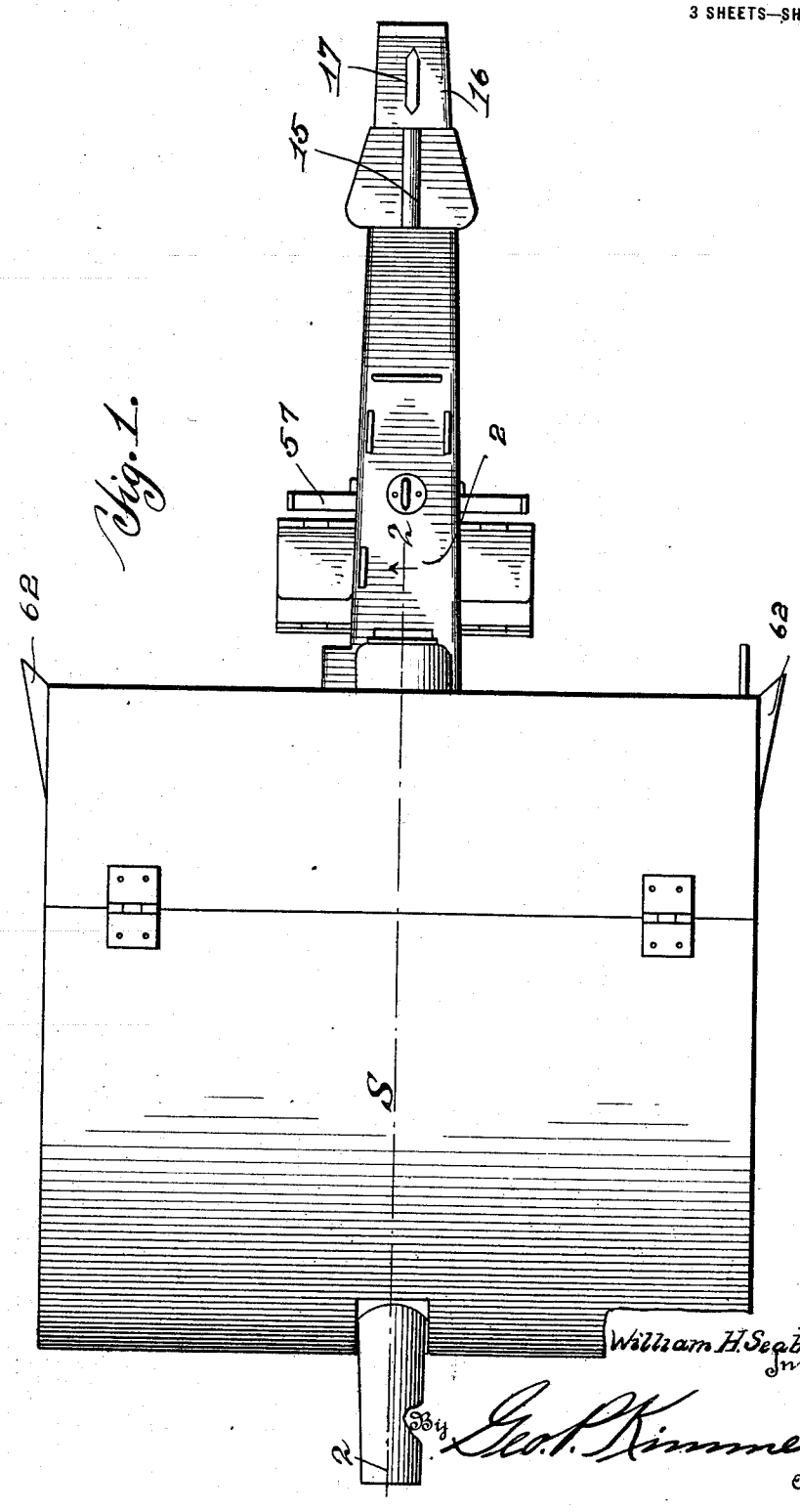

William H. Seabrook Jr.
Inventor

By Geo. L. Kimmel.
Attorney

W. H. SEABROOK, JR.

GUN SHIELD FOR PORTABLE GUNS.

APPLICATION FILED MAY 17, 1916.

1,247,457.

Patented Nov. 20, 1917.

3 SHEETS—SHEET 2.

Fig. 2.

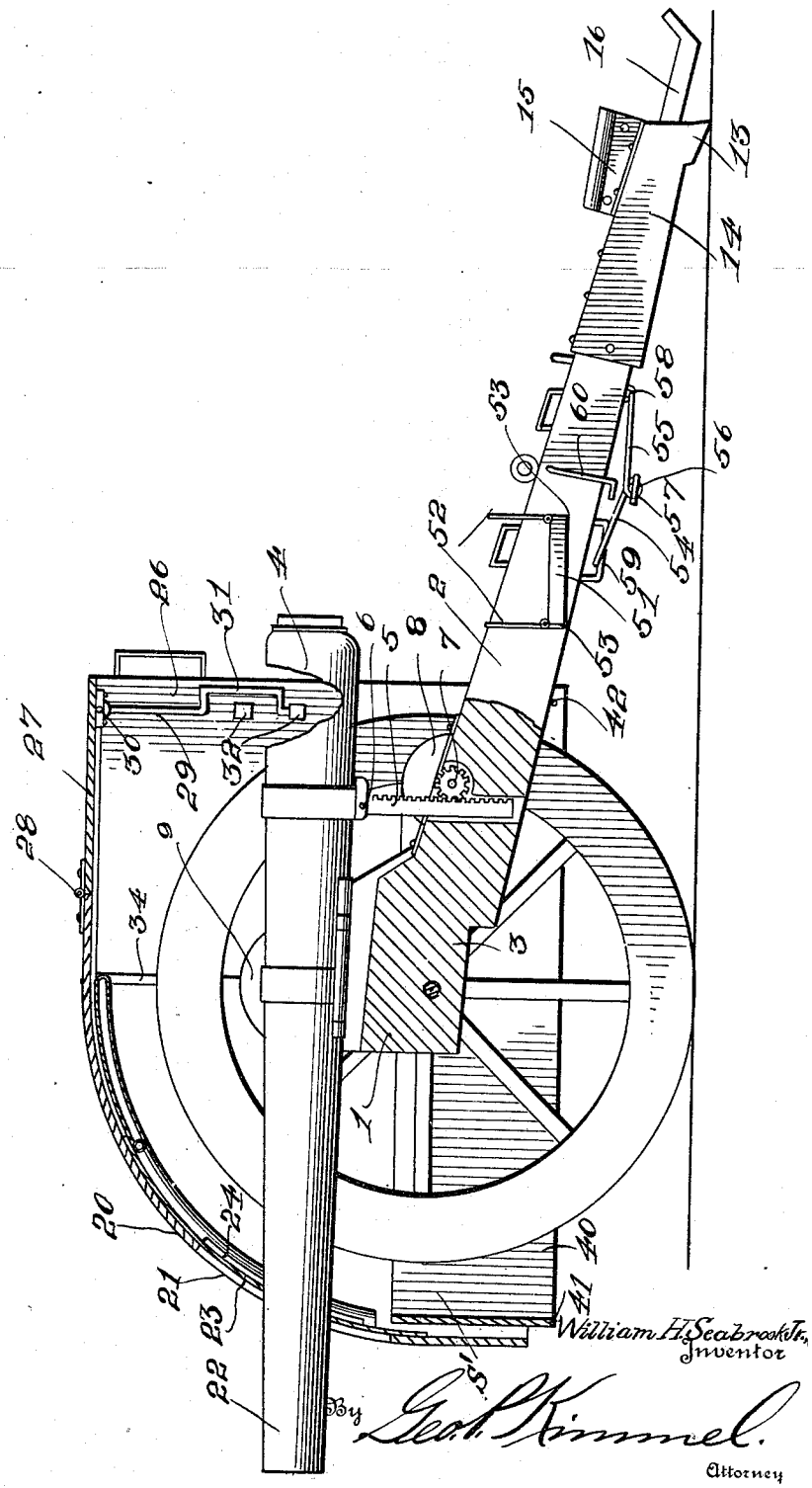

William H. Seabrook Jr.
Inventor

By Geo. P. Kimmel.
Attorney

W. H. SEABROOK, JR.

GUN SHIELD FOR PORTABLE GUNS.

APPLICATION FILED MAY 17, 1916.

1,247,457.

Patented Nov. 20, 1917.

3 SHEETS—SHEET 3.

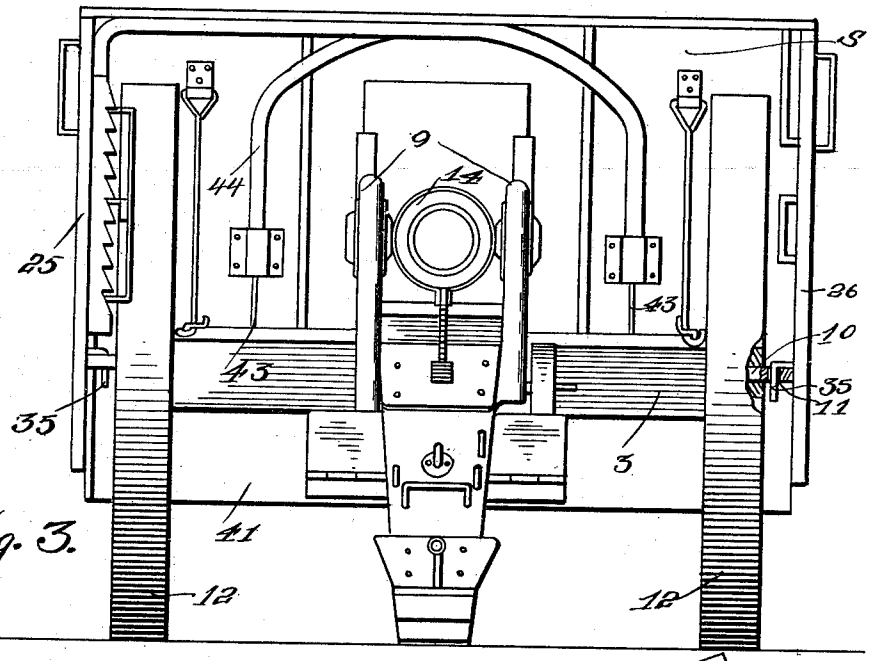

Fig. 3.

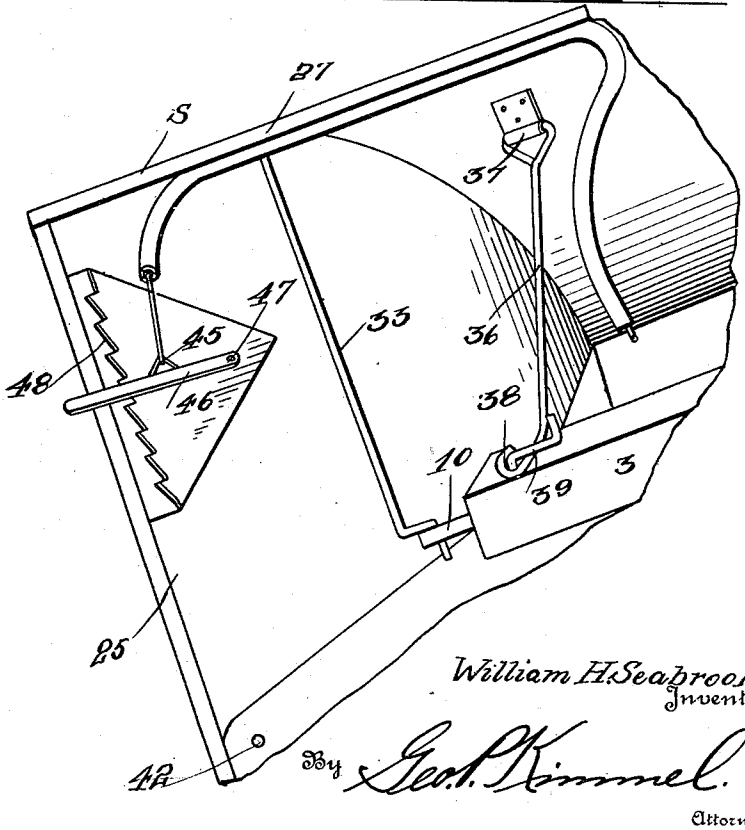

Fig. 4.

William H. Seabrook Jr.,
Inventor

By Geo. P. Kimmel.

Attorney

UNITED STATES PATENT OFFICE.

WILLIAM H. SEABROOK, JR., OF SAVANNAH, GEORGIA.

GUN-SHIELD FOR PORTABLE GUNS.

1,247,457. Specification of Letters Patent. Patented Nov. 20, 1917.

Application filed May 17, 1916. Serial No. 98,097.

To all whom it may concern:

Be it known that I, WILLIAM H. SEABROOK, Jr., a citizen of the United States, and resident of Savannah, in the county of Chatham and State of Georgia, have invented certain new and useful Improvements in Gun-Shields for Portable Guns, of which the following is a specification.

The present invention relates to new and useful improvements in ordnance and has particular reference to an improved type of shield for use in connection with portable guns.

The primary object of my invention is to provide in a simple and cheap yet effective structure a removable shield for attachment to and use in connection with portable guns, the device being particularly adapted for use in connection with field guns, commonly called artillery.

Another object of my invention is to provide a shield of the class described having an improved means for detachably mounting the same on a field gun carriage whereby the shield may be removed for repair or shipment when the gun is not in use.

A further object of my invention is to provide a shield of the class described having an improved base protecting shield associated therewith, said shield being arranged whereby to move the same into and out of operative position when desired. I have also provided an improved riding means for association with the gun carriage.

Other objects and advantages to be derived from the use of my improved gun shield will appear from the following detail description and the claims, taken with an inspection of the accompanying drawings, in which:—

Figure 1 is a top plan view of a gun having a shield thereon embodying the improvements of my invention;

Fig. 2 is a longitudinal sectional view taken on the line 2—2 of Fig. 1, looking in the direction of the arrows;

Fig. 3 is a rear end elevational view of the gun and shield; and

Fig. 4 is an enlarged fragmental perspective view of a portion of the shield and gun carriage.

Referring more particularly to the drawings, in which similar characters of reference designate like and corresponding parts throughout the various views, 1 designates in its entirety the gun carriage, the same being composed of a leg 2 and a transverse beam 3. The gun is designated 4 and may be one of any of the usual types, a rack bar 5 being pivotally connected with said gun as at 6 and normally engaged with a pinion 7 operable by a wheel 8. This mechanism is for moving the gun to the proper elevation when in use. The gun is pivotally mounted between frames 9 carried by the beam 3 and leg 2. The beam 3 carries on the free ends thereof stub-axles 10 provided with openings 11 for a purpose which will hereinafter appear. The riding wheels of the gun carriage are designated 12 and are mounted on the stub-axles 10. The rear end portion of the leg 2 is provided with a ground engaging shoe 13 having a body 14 for engagement with the leg, a socket 15 being provided into which may be inserted a crow-bar or the like for manipulating the gun into a position for firing, an arm 16 extending from said body 14 and having an opening 17 therein serving as a retainer for the gun when in use. A stake is to be driven through the opening 17 into the ground for maintaining the gun in position when firing.

The improved shield of my invention includes a body portion S having a curved top and front wall 20, the front curved portion thereof being provided with a rectangular opening 21 to accommodate the muzzle 22 of the gun 4, a protecting plate 23 being carried by the gun muzzle and curved to conform to the configuration of the front wall 20, guiding flanges 24 being carried on said front wall for engagement with said protector 23 to guide the same.

The shield S is provided with side walls 25 and 26 which are engaged with the gun carriage in a manner which will hereinafter appear.

A portion of the top of the shield S and designated 27 is hingedly arranged as at 28, said portion being adapted for movement into an inclined position serving as a deflector. An adjusting and supporting rod for said hinged portion 27 is provided and designated 29, said rod being hinged as at

30 to said portion 27, the rod being provided with a plurality of offset portions 31 forming handles. A plurality of loops 32 are mounted on the side wall 26 to accommodate the free end of the rod 29 whereby to adjust the hinged portion 27 to the desired angle.

I provide means for connecting the shield to the gun carriage, said means including a pair of vertical rods 33 and 34 provided with inturned lower ends 35 for engagement in the openings 11 formed in the stub-axles 10. A pair of brace rods 36 hingedly mounted at 37 on the curved front wall 20 of the shield are provided, the lower free end portions of said rods being formed with U-shaped portions 38 engageable with cranks 39 revolubly mounted on the beam 3.

I provide means for preventing fragments of a bursting shell or the like from passing behind the shield beneath the lower edge thereof, said means including a supplemental shield S′ having side portions 40 and a front portion 41. The side portions are hingedly mounted at their rear ends to the side walls 25 and 26 of the shield S, the pivot point being designated 42. The front portion 41 of the shield S′ is raised and lowered by means of a pair of cables 43 operating through conduits 44, said cables being connected as at 45 to a lever 46 pivoted at 47 on the side wall 25 of the shield S. The lever is adapted for engagement with a rack bar 48 having ratchet teeth. The shield S′ is adapted to fall into operative position by gravity when the lever 46 is disengaged from the teeth 48.

I provide an improved riding attachment for use in connection with the leg 2 of the gun carriage, said riding attachment including a pair of reversible seats 51 provided each with a pair of hinged backs 52, said backs having stops 53 formed integrally therewith for engagement with the seat portion 51. I provide a novel form of foot rest including U-shaped frames 54 and 55 hingedly connected as at 56 on a transverse bar 57, the U-shaped member 55 being hingedly connected as at 58 to the under surface of the leg 2 of the gun carriage. The other U-shaped member 54 is slidably operable in a U-shaped member 59. A hook member 60 is pivotally arranged on the one side of the leg 2 for engagement with the bar 57 to retain the latter in the raised position when not in use.

Frames 62 having tapering outer walls provided with perforations are arranged on the side walls 25 and 26 of the shield S to permit the gun crew to obtain a view of the target or the like without exposing themselves to an opponent's fire.

It will be seen that in using my improved gun and shield the latter will permit free manipulation of the gun at the same time protecting the gun crew. The guides 24 permit movement of the gun engaging member 23 and at the same time closing the aperture which would ordinarily exist adjacent the gun barrel. It will be seen that by dropping the shield 41 into engagement with the ground exploding shells directly in front of the gun are prevented from passing behind the shield underneath the same. The member 27 serves as a deflector, the same being adjustable as set forth.

The riding attachment for the gun carriage permits the gun crew to ride on the leg 2 of the carriage. The seats 51 may also serve for use when firing the gun, although this may not be possible under some conditions. I desire to lay particular stress on the novel manner in which the shield is mounted on the gun carriage, this means preventing the rattling of the shield and at the same time serving as a means for retaining the shield on the axle.

From the above description taken in connection with the accompanying drawings, it is thought that a clear and comprehensive understanding of the construction, operation and advantages of my invention may be had, and while I have shown and described my invention as embodying a specific structure, I desire that it be understood that such changes may be made in said structure as do not depart from the spirit and scope of the invention as claimed.

Having thus fully described my invention, what I claim as new and desire to secure by Letters Patent, is:—

1. The combination with a gun carriage having a gun mounted thereon, of a shield for association with said gun carriage, said shield having a curved front wall and a hinged top wall, means for accommodating the muzzle of a gun extending through the front wall, and a supplemental shield hingedly associated with said main shield.

2. The combination with a gun carriage having a gun mounted thereon, of a shield including side walls, a curved front wall and a horizontal top wall, a portion of the latter being hinged to form a deflector, and sighting means carried by the side walls.

3. In a shield for guns, a body having a curved front wall and a hingedly arranged top wall forming a deflector, said curved front wall being provided with an opening, a slidable protector engageable with the muzzle of a gun arranged in said opening, and a supplemental shield member hinged at the rear end of said body and extending to the forward end thereof for the purpose specified.

4. The combination with a gun carriage having a gun mounted thereon, of a shield for association with the said gun carriage, the said shield having a curved front wall and a horizontal top wall, of a supplemental shield member hinged at the rear end of

first said shield and extending to the forward end thereof, a pair of conduits, a pair of cables operating through said conduits to raise and lower the said supplemental shield, one end of the said cables being connected to the said supplemental shield, a rack bar mounted on the side wall of the said shield, a lever pivoted adjacent to the rack bar, and the side of the said lever being adapted for engagement in the teeth of the rack bar for a purpose specified.

In testimony whereof, I affix my signature hereto.

WILLIAM H. SEABROOK, JR.

Copies of this patent may be obtained for five cents each, by addressing the "Commissioner of Patents, Washington, D. C."