(No Model.)

J. B. SMILEY.

COMBINED WINDOW SHELF AND BRACKET.

No. 456,443. Patented July 21, 1891.

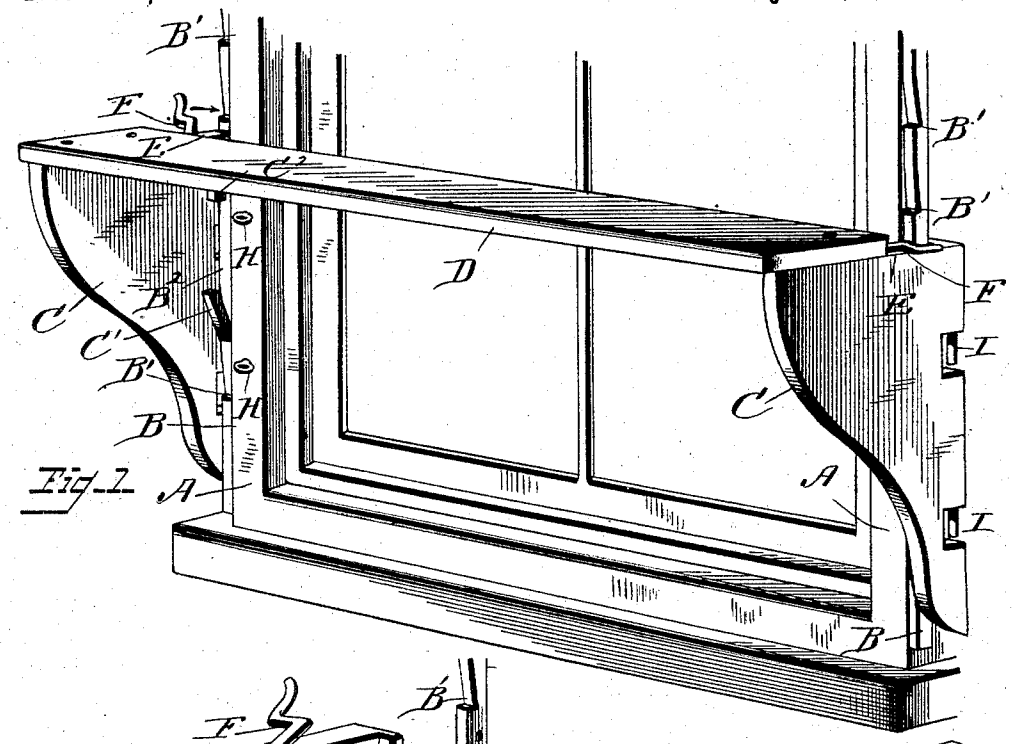

Fig. 1.

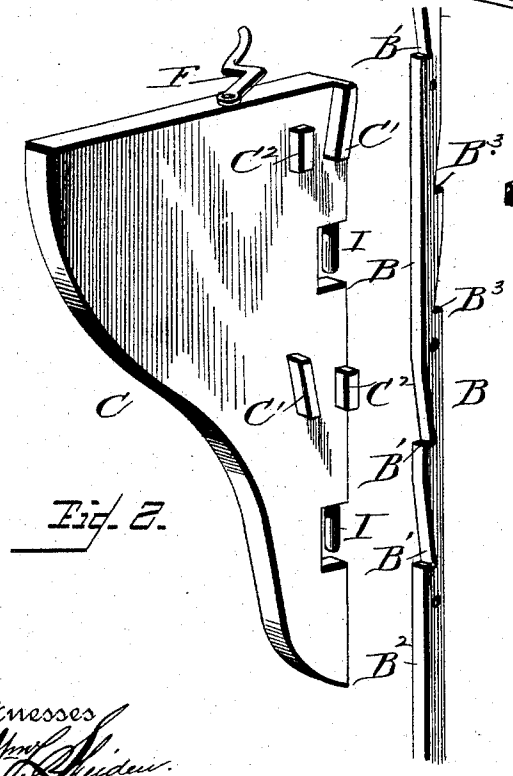

Fig. 2.

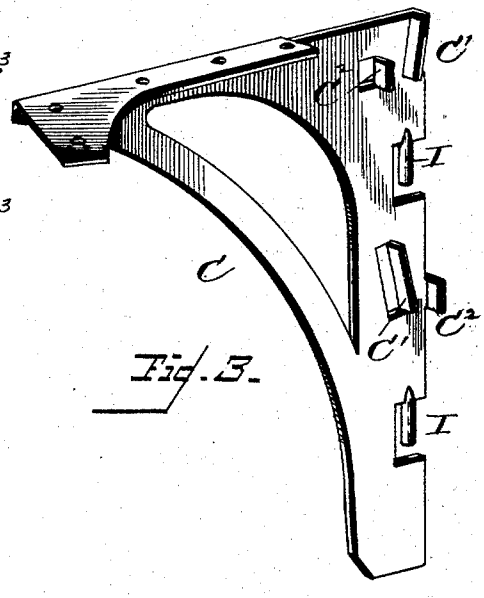

Fig. 3.

Witnesses
[illegible]
A. L. Hough

Inventor
John B. Smiley
By his Attorney
Franklin H. Hough

THE NORRIS PETERS CO., PHOTO-LITHO., WASHINGTON, D. C.

UNITED STATES PATENT OFFICE.

JOHN B. SMILEY, OF SOUTH OMAHA, NEBRASKA.

COMBINED WINDOW SHELF AND BRACKET.

SPECIFICATION forming part of Letters Patent No. 456,443, dated July 21, 1891.

Application filed March 28, 1891. Serial No. 386,745. (No model.)

To all whom it may concern:

Be it known that I, JOHN B. SMILEY, a citizen of the United States, residing at South Omaha, in the county of Douglas and State of Nebraska, have invented certain new and useful Improvements in a Combined Window Shelf and Bracket; and I do declare the following to be a full, clear, and exact description of the invention, such as will enable others skilled in the art to which it appertains to make and use the same, reference being had to the accompanying drawings, and to the letters of reference marked thereon, which form a part of this specification.

This invention relates to certain new and useful improvements in shelf-supporting brackets for windows; and it has for its object to simplify and cheapen the construction and to render more serviceable in operation that class of brackets which are adapted to be readily attached to the frame of an ordinary house-window and serve as a shelf for plants and the like.

The invention has for its more immediate object the providing of a bracket of the character mentioned which may be readily placed in position and adjusted to any height desired and when not required for use may be readily detached from the window-frame.

A further object of the invention is to so construct the bracket and its attachments as to adapt it to be readily converted into a pivoted or swinging bracket which may be turned, when so desired, so as to swing the shelf to one side of the window.

To these ends, and to such others as the invention may pertain, the same consists in the peculiar construction and in the novel combination, arrangement, and adaptation of parts, all as more fully hereinafter described, shown in the accompanying drawings, and then specifically defined in the appended claims.

The invention is fully illustrated in the accompanying drawings, which, with the letters of reference marked thereon, form a part of this specification, like letters of reference indicating like parts throughout the several views, and in which drawings—

Figure 1 is a perspective view of a window-bracket embodying my improvements, the same being shown as in actual use. Fig. 2 is an enlarged detail in perspective of one of the brackets detached from the shelf; and Fig. 3 is a like view of a modification, in which the bracket is shown as made of sheet metal.

Reference now being had to the details of the drawings by letter, A designates a window-frame, to the outer side edges of which are attached vertical strips B, having their front edges flush with the front face of the frame. These strips B are provided upon their front edges with notches B′, said notches being in pairs, and a short space B^2 intervening between each pair or set of notches, as shown. The rear edge of the strip B is also provided with notches, as shown at B^3, said notches being also arranged in pairs and in all respects similar to the notches B′ upon the front face of the strip, excepting with reference to their relative vertical position, and upon reference to the drawings it will be observed that each set of notches upon the rear edge of the strip is so placed as to be opposite a space B^2 upon the front face of the strip.

The bracket C is provided upon its inner face adjacent to its rear edge, which overlaps the strip B upon the window-frame, with a series of inclined lugs or projections C′ and lugs C^2, these lugs being arranged in pairs, each pair consisting of an inclined lug C′ and a vertical lug C^2. It will be observed that the positions of the lugs upon the brackets correspond with the vertical arrangement of the notches upon the strips B, and it will be further noticed that in the upper set of lugs upon the bracket the rear lug is an inclined one and the opposite lug in the pair is vertical. In the next lower pair this arrangement is reversed, the rear lug in this set being vertical and the opposite one inclined.

The shelf D is nailed or otherwise secured to the upper edges of the brackets, as shown, with a space E intervening between the rear edge of the shelf and the rear edge of the bracket, and to the upper edge of the bracket, within the space E, is pivoted one end of a lever F, which lever is bent so as to conform to the shape of the front edge of the window-frame.

The method of attaching and adjusting the bracket will be readily understood. It is placed in position so as to bring the strip B

upon the window-frame into the space between the lugs C′ and C² upon the bracket. The inclined lugs C′ will engage the notches upon the strip, while the vertical lugs C² will bear against the smooth vertical spaces upon the strip, which intervene between the lugs. When the bracket has been raised or lowered to its proper vertical position, the levers F are turned so as to cause the same to bear against the window-frame, thus forcing the upper end of the bracket slightly outward and locking the same against vertical displacement, as by the arrangement of the lugs and notches described it will be readily seen that it is necessary that the rear edge of the bracket should be in a true vertical position in order to free the lugs from the notches and permit the bracket to be moved either up or down.

In Fig. 3 of the drawings I have shown a modification of the bracket, and in this construction I have made each bracket of heavy sheet or malleable metal, each bracket consisting of a single piece and having the lugs and other projections either struck up from the sheet metal and bent so as to occupy their proper positions or, in case the bracket is made of cast or malleable metal, these lugs may be cast integral with the bracket.

In order to provide a means for attaching the shelf to the bracket, when the bracket is constructed of metal, the upper edge of the bracket, which is folded over to form a support for the shelf, is provided with nail or screw holes, as shown in Fig. 3.

In order to provide a means whereby the bracket may be converted readily into a hinged or pivoted bracket, so that the shelf may be turned to one side of the window, I provide the front face of the window-frame with suitable eyes H, which project for a short distance beyond the face of the casing, and the rear edge of the bracket is provided with downwardly-projecting pintles I, adapted to engage the eyes H. By this construction it will be readily seen that the bracket may be detached and pivotally connected with the window-frame when desired.

Having thus described my invention, what I claim to be new, and desire to secure by Letters Patent, is—

1. The combination, with the window-frame, the strips B, attached thereto and having notches and vertical faces upon both its front and rear edges, of the brackets provided with inclined and vertical lugs, arranged in pairs, projecting at right angles to the inner face of the bracket, and adapted to engage the notches and vertical face of the strips, substantially as shown and described, and for the purpose specified.

2. The herein-described window-shelf, the same comprising, in combination, a window-frame, notched strips extending vertically along its outer edges and having notches on one side opposed to the smooth vertical face on the other side, brackets provided with inclined and vertical lugs or projections adapted to engage the strips, a shelf supported by the brackets, and a lever pivoted to the brackets and adapted to be turned so as to engage the face of the window-frame and lock the brackets in position, substantially as shown and described.

In testimony whereof I affix my signature in presence of two witnesses.

JOHN B. SMILEY.

Witnesses:

LUTE. BLANCHARD,

FRED. M. GRANTHAM.