US 20050008908A1

(19) United States

(12) Patent Application Publication (10) Pub. No.: US 2005/0008908 A1

Kaye et al. (43) Pub. Date: Jan. 13, 2005

# (54) PORTABLE FUEL CARTRIDGE FOR FUEL CELLS

(75) Inventors: **Ian W. Kaye**, Livermore, CA (US); **James L. Kaschmitter**, Pleasanton, CA (US)

Correspondence Address:
**BEYER WEAVER & THOMAS LLP**
**P.O. BOX 778**
**BERKELEY, CA 94704-0778 (US)**

(73) Assignee: **UltraCell Corporation**, Livermore, CA (US)

(21) Appl. No.: **10/877,766**

(22) Filed: **Jun. 25, 2004**

**Related U.S. Application Data**

(60) Provisional application No. 60/482,996, filed on Jun. 27, 2003. Provisional application No. 60/482,966, filed on Jun. 27, 2003. Provisional application No. 60/483,415, filed on Jun. 27, 2003. Provisional application No. 60/483,416, filed on Jun. 27, 2003.

**Publication Classification**

(51) **Int. Cl.**[7] ..... **H01M 8/06**; B65D 85/00

(52) **U.S. Cl.** ..... **429/20**; 422/198; 206/0.6

## (57) ABSTRACT

Described herein is a portable storage device that stores a hydrogen fuel source. The storage device includes a bladder that contains the hydrogen fuel source and conforms to the volume of the hydrogen fuel source. A housing provides mechanical protection for the bladder. The storage device also includes a connector that interfaces with a mating connector to permit transfer of the fuel source between the bladder and a device that includes the mating connector. The device may be a portable electronics device such as a laptop computer. Refillable hydrogen fuel source storage devices and systems are also described. The refillable system comprises a hydrogen fuel source refiner that includes the mating connector and provides the hydrogen fuel source to the storage device. Hot swappable fuel storage systems described herein allow a portable hydrogen fuel source storage device to be removed from a fuel processor or electronics device it provides the hydrogen fuel source to, without shutting down the receiving device or without compromising hydrogen fuel source provision to the receiving device for a limited time.

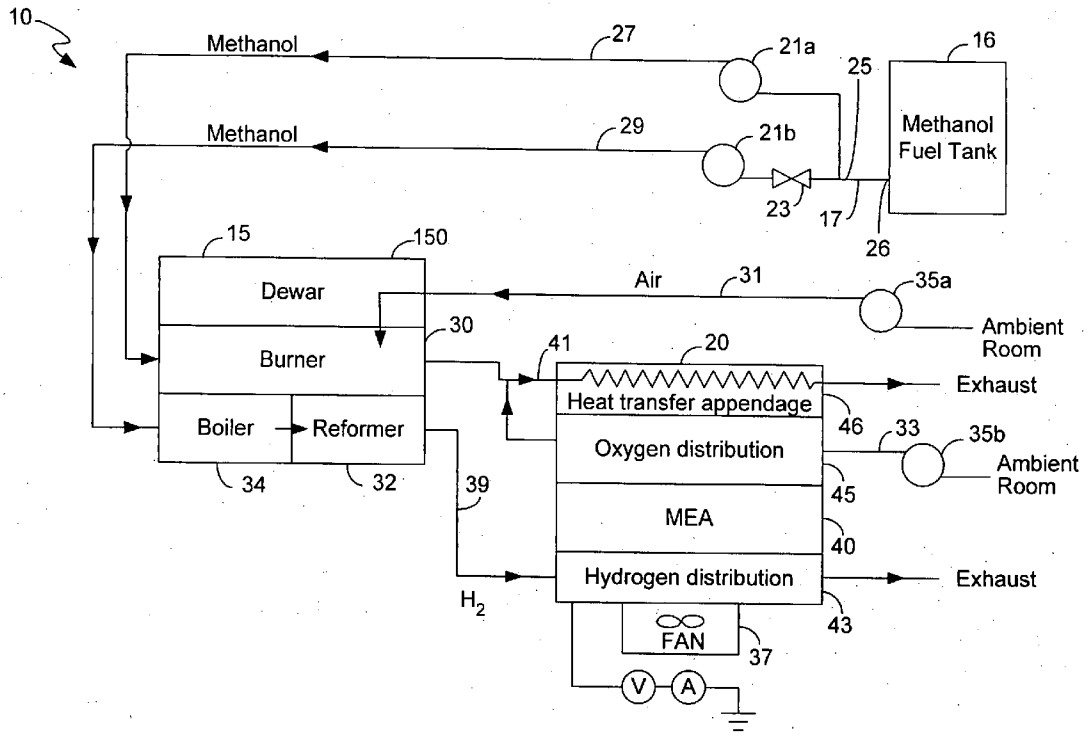

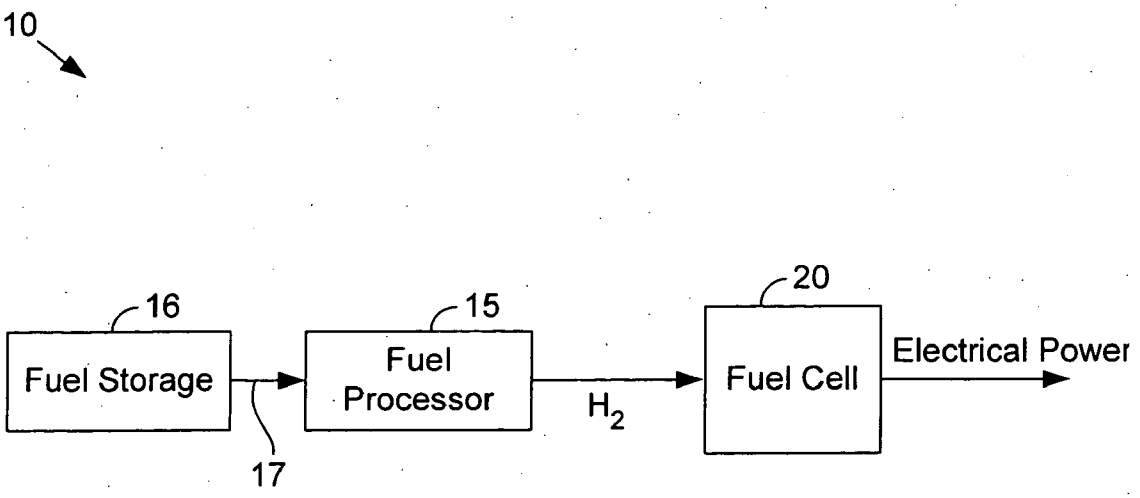
10
16
Fuel Storage
17
15
Fuel Processor
$H_2$
20
Fuel Cell
Electrical Power

FIG. 1A

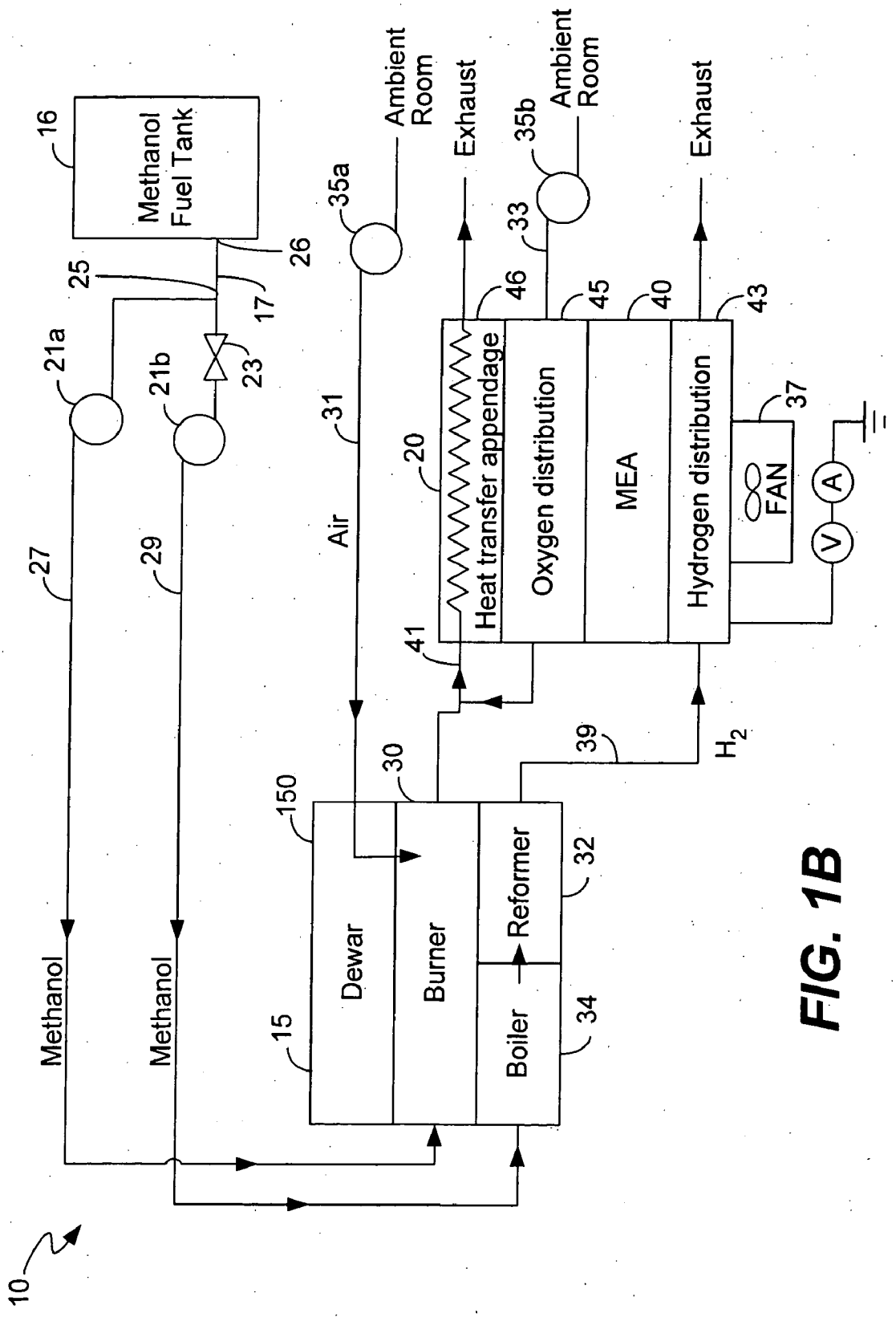
16
Methanol Fuel Tank
25
26
17
23
21a
21b
27
29
Methanol
Methanol
10
35a
Ambient Room
Exhaust
35b
Ambient Room
Exhaust
33
46
45
40
43
31
Air
20
Heat transfer appendage
Oxygen distribution
MEA
Hydrogen distribution
37
FAN
A
V
41
39
$H_2$
150
30
Dewar
Burner
Reformer
32
15
Boiler
34

FIG. 1B

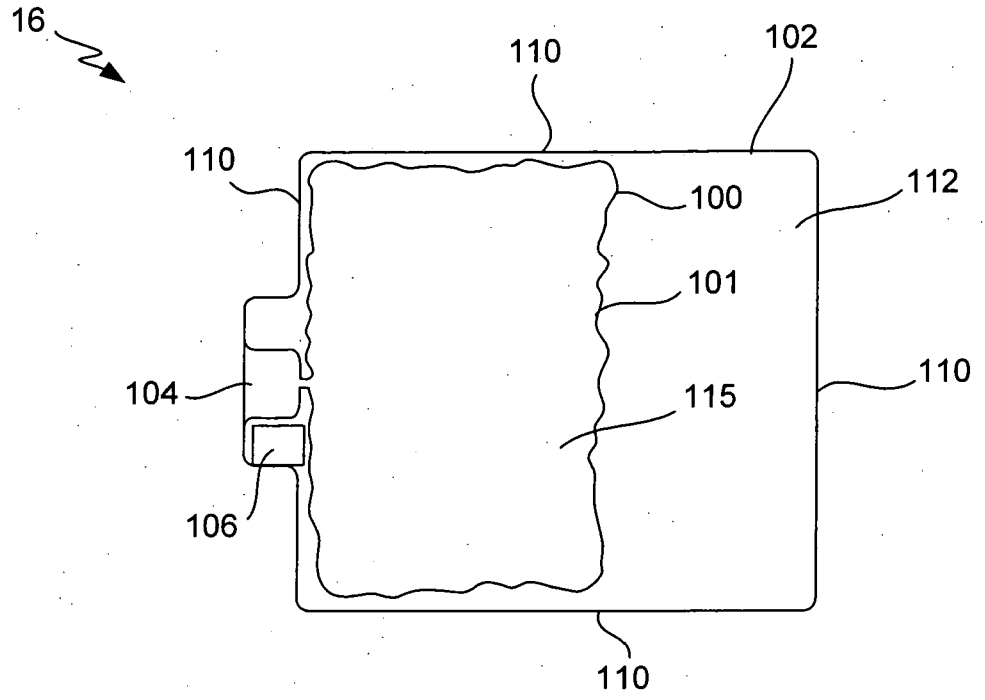
16
110
102
110
112
100
101
104
115
110
106
110

FIG. 2A

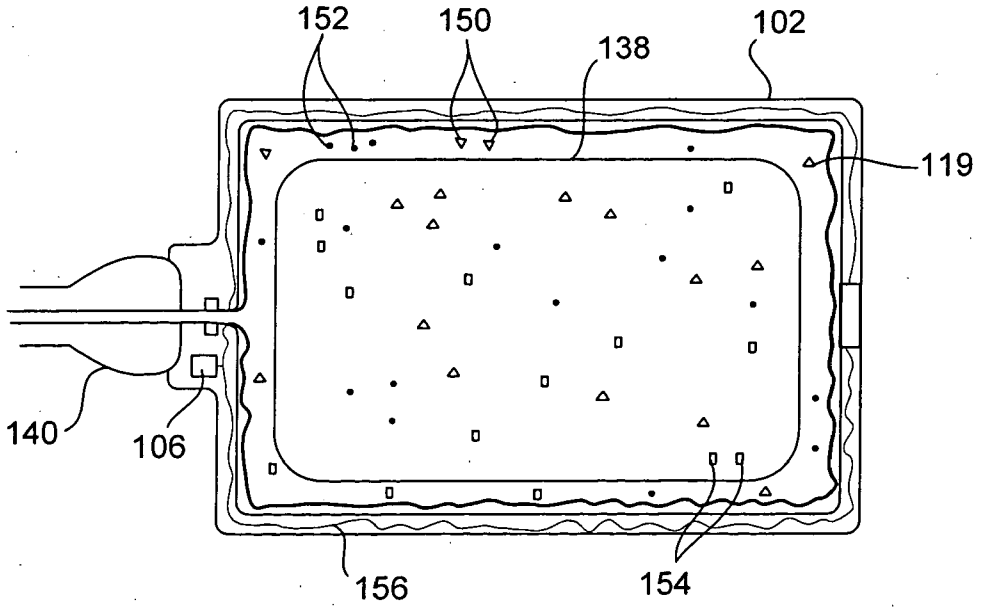
152
150
138
102
119
140
106
156
154

FIG. 2C

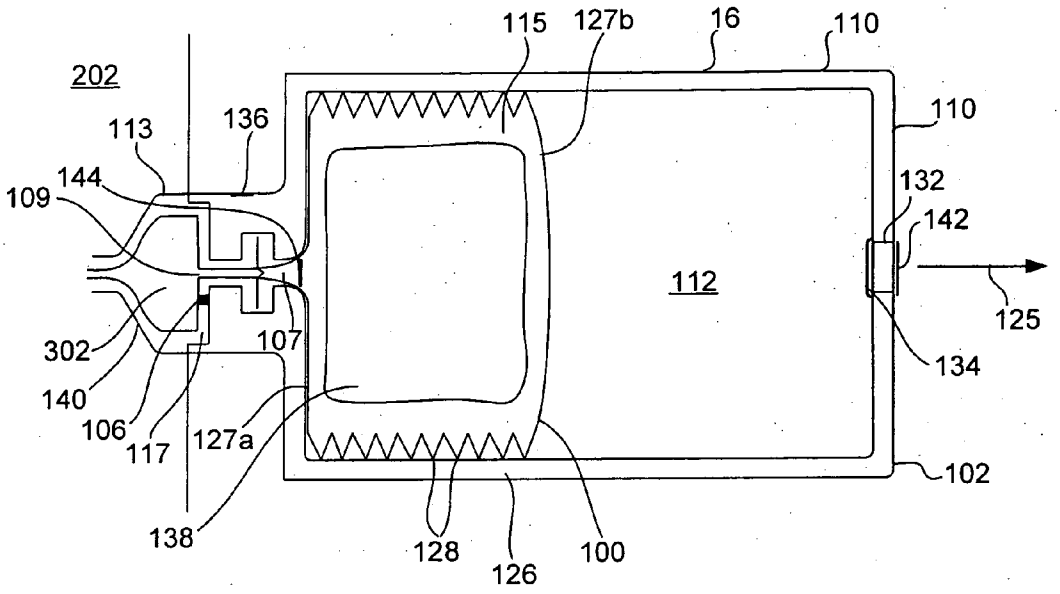
115
127b
16
110
202
113
136
110
144
109
132
142
112
125
107
134
302
140
106
117
127a
102
138
128
126
100

FIG. 2B

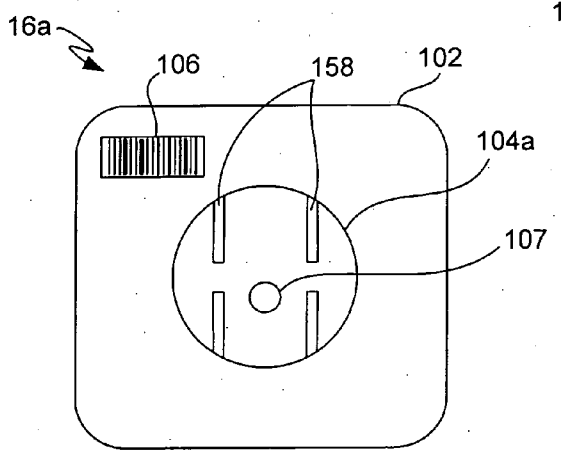


FIG. 2D

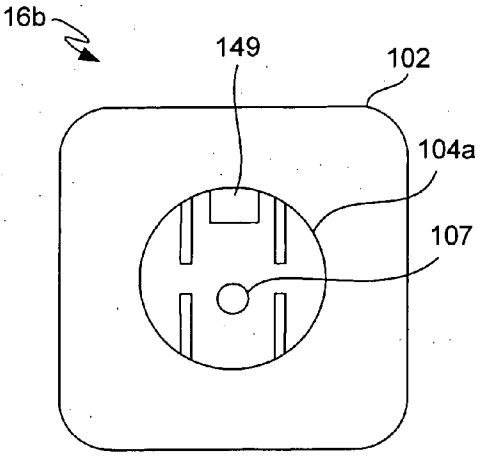


FIG. 2E

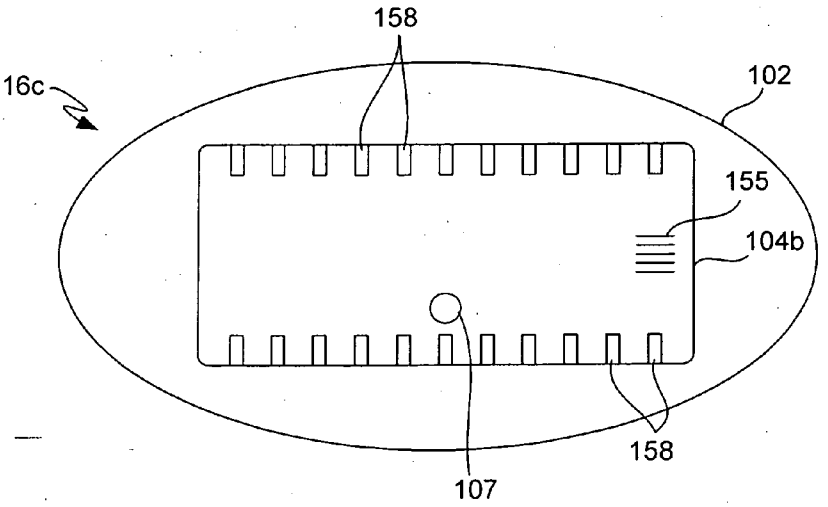


FIG. 2F

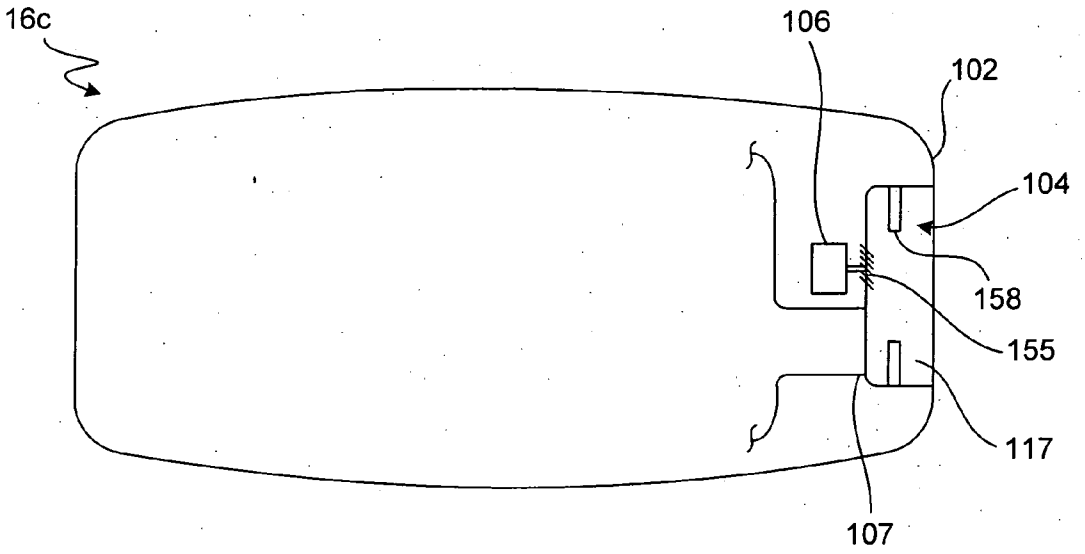
16c
106
102
104
158
155
117
107

FIG. 2G

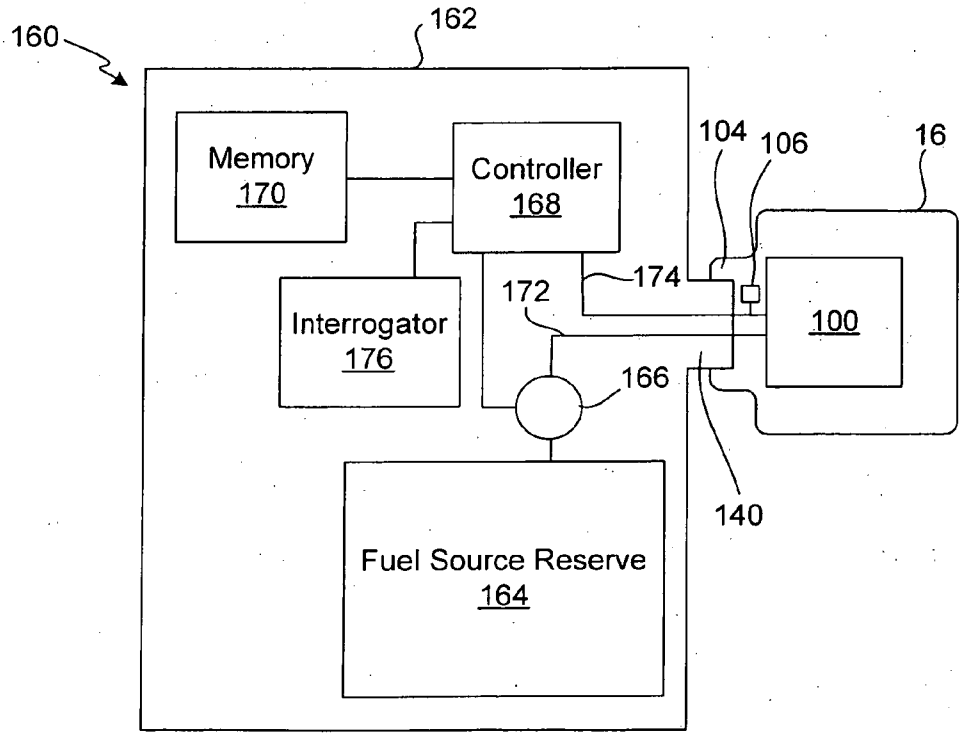
160
162
Memory
170
Controller
168
104
106
16
174
172
100
Interrogator
176
166
140
Fuel Source Reserve
164

FIG. 3

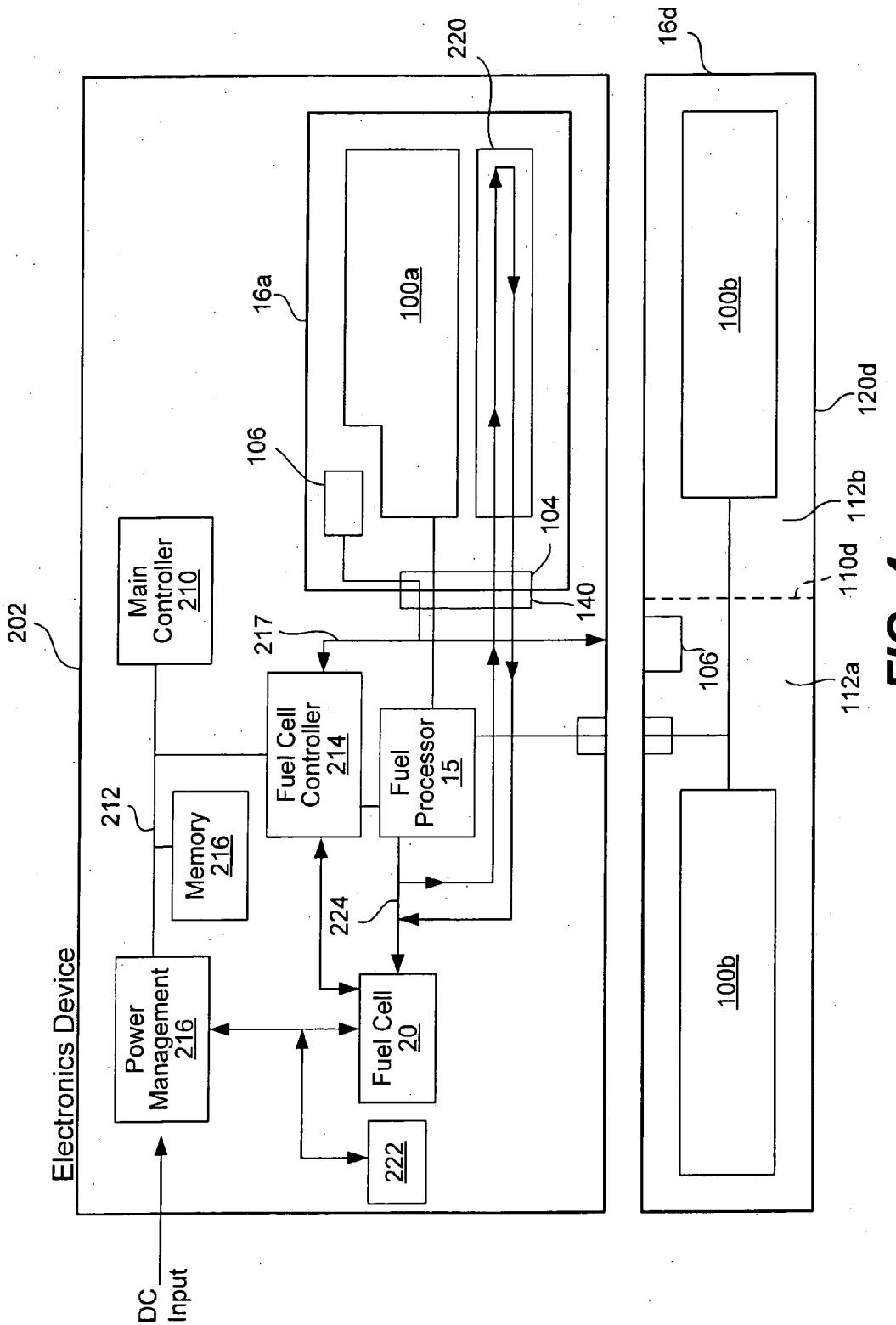
Electronics Device
202
Main Controller 210
Memory 216
212
Power Management 216
Fuel Cell Controller 214
217
Fuel Processor 15
224
Fuel Cell 20
222
DC Input
16a
100a
220
106
104
140
16d
100b
120d
112b
110d
112a
106
100b

FIG. 4

# PORTABLE FUEL CARTRIDGE FOR FUEL CELLS

## CROSS-REFERENCE TO RELATED APPLICATIONS

[0001] This application claims priority under 35 U.S.C. §119(e) from co-pending U.S. Provisional Patent Application No. 60/482,996 entitled "Fuel cell system startup procedure and self-heating apparatus", which is incorporated by reference for all purposes; this application also claims priority under 35 U.S.C. §119(e) from co-pending U.S. Provisional Patent Application No. 60/483,415 entitled "Refillable Smart Methanol Cartridge for Fuel Cells", which is incorporated by reference for all purposes; this application also claims priority under 35 U.S.C. §119(e) from co-pending U.S. Provisional Patent Application No. 60/483,416 entitled "Fuel Preheat in Portable Electronics Powered by Fuel Cells", which is incorporated by reference for all purposes.

## BACKGROUND OF THE INVENTION

[0002] The present invention relates to fuel cell technology. In particular, the invention relates to portable fuel cell storage devices that store a fuel source, allow transportation of the fuel source, and permit coupling to electronics devices including a fuel processor that converts the fuel source to hydrogen.

[0003] A fuel cell electrochemically combines hydrogen and oxygen to produce electrical energy. The ambient air readily supplies oxygen. Hydrogen provision, however, calls for a working supply. Gaseous hydrogen has a low energy density that reduces its practicality as a portable fuel. Liquid hydrogen, which has a suitable energy density, must be stored at extremely low temperatures and high pressures, making storing and transporting liquid hydrogen burdensome.

[0004] A reformed hydrogen supply processes a fuel source to produce hydrogen. The fuel source acts as a hydrogen carrier. Currently available hydrocarbon fuel sources include methanol, ethanol, gasoline, propane and natural gas. Liquid hydrocarbon fuel sources offer high energy densities and the ability to be readily stored and transported. A fuel processor reforms the hydrocarbon fuel source to produce hydrogen.

[0005] To date, fuel cell evolution has concentrated on large-scale applications such as industrial size generators for electrical power back-up. Consumer electronics devices and other portable electrical power applications currently rely on lithium ion and similar battery technologies. Portable fuel source storage devices that service portable electronics such as laptop computers would be desirable but are not yet commercially available.

## SUMMARY OF THE INVENTION

[0006] The present invention relates to a portable storage device that stores a hydrogen fuel source. The storage device includes a bladder that contains the hydrogen fuel source and conforms to the volume of the hydrogen fuel source. A housing provides mechanical protection for the bladder. The storage device also includes a connector that interfaces with a mating connector to permit transfer of the fuel source between the bladder and a device that includes the mating connector. The device may be a portable electronics device such as a laptop computer. A digital, electrical or mechanical means of identifying and updating information relevant to usage of the storage device may also be employed.

[0007] Refillable hydrogen fuel source storage devices are also provided. A hydrogen fuel source refiner includes the mating connector and fills the storage device with hydrogen fuel source.

[0008] In a fuel cell system that receives the hydrogen fuel source from the storage device, a fuel processor may reform the hydrogen fuel source to produce hydrogen, and then provides the hydrogen to a fuel cell that generates electricity using the hydrogen.

[0009] Hot swappable fuel storage systems described herein allow a portable hydrogen fuel source storage device to be removed from a fuel processor or electronics device it provides the hydrogen fuel source to, without shutting down the receiving device or without compromising hydrogen fuel source provision to the receiving device for a limited time. The hot swappable system comprises a reserve that provides the hydrogen fuel source to the receiving device. The reserve includes a volume that stores the hydrogen fuel source when the connector and mating connector are separated.

[0010] In one aspect, the present invention relates to a storage device for storing a hydrogen fuel source. The storage device comprises a bladder that contains the hydrogen fuel source and conforms to the volume of the hydrogen fuel source in the bladder. The storage device also comprises a housing that provides mechanical protection for the bladder. The storage device further comprises a connector that interfaces with a mating connector to permit transfer of the fuel source between the bladder and a device that includes the mating connector. The storage device additionally comprises memory that stores information relevant to usage of the storage device.

[0011] In another aspect, the present invention relates to a storage device for storing a hydrogen fuel source. The storage device comprises a bladder that contains the hydrogen fuel source and conforms to the volume of the hydrogen fuel source in the bladder. The storage device also comprises a housing that provides mechanical protection for the bladder. The storage device further comprises a connector that interfaces with a mating connector included in a hydrogen fuel source refiner to permit transfer of the hydrogen fuel source from the hydrogen fuel source refiner to the bladder.

[0012] In yet another aspect, the present invention relates to a hot swappable fuel storage system. The hot swappable system comprises a hydrogen fuel source storage device. The storage device includes a) a bladder that contains the hydrogen fuel source and conforms to the volume of the hydrogen fuel source in the bladder, b) a housing that provides mechanical protection for the bladder; and c) a connector. The hot swappable system also comprises a mating connector that interfaces with the connector to permit transfer of the hydrogen fuel source between the storage device and a device that includes the mating connector. The hot swappable system further comprises a fuel processor that includes a reformer configured to receive the hydrogen fuel source from the mating connector, configured to output hydrogen, and including a catalyst that facilitates the production of hydrogen. The hot swappable system

additionally comprises a hot swappable reserve configured to store the hydrogen fuel source when the connector and mating connector are separated.

[0013] In still another aspect, the present invention relates to system for providing a refillable hydrogen fuel source storage device. The system comprises a hydrogen fuel source storage device. The storage device includes a) a bladder that contains the hydrogen fuel source and conforms to the volume of the hydrogen fuel source in the bladder, b) a housing that provides mechanical protection for the bladder; and c) a connector that interfaces with a mating connector to permit transfer of the hydrogen fuel source between the bladder and a device that includes the mating connector. The system also comprises a hydrogen fuel source refiller including the mating connector and configured to provide hydrogen fuel source to the storage device when the connector is coupled to the mating connector.

[0014] In another aspect, the present invention relates to a fuel cell system for producing electrical energy. The fuel cell system comprises a hydrogen fuel source storage device for storing a hydrogen fuel source. The storage device includes a bladder that contains the hydrogen fuel source and conforms to the volume of the hydrogen fuel source in the bladder. The storage device also includes a housing that provides mechanical protection for the bladder. The storage device further includes a memory that stores information relevant to usage of the storage device. The storage device additionally includes a connector that interfaces with a mating connector to permit transfer of the hydrogen fuel source between the bladder and a device that includes the mating connector. The fuel cell system also comprises a fuel processor. The fuel processor includes a reformer configured to receive the hydrogen fuel source from the mating connector, configured to output hydrogen, and including a catalyst that facilitates the production of hydrogen. The fuel processor also includes a burner configured to provide heat to the reformer. The fuel cell system also comprises a fuel cell including a fuel cell stack configured to produce electrical energy using hydrogen output by the fuel processor.

[0015] These and other features and advantages of the present invention will be described in the following description of the invention and associated figures.

## BRIEF DESCRIPTION OF THE DRAWINGS

[0016] **FIG. 1A** illustrates a fuel cell system for producing electrical energy in accordance with one embodiment of the present invention.

[0017] **FIG. 1B** illustrates schematic operation for the fuel cell system of **FIG. 1A** in accordance with a specific embodiment of the present invention.

[0018] **FIG. 2A** shows a simplified hydrogen fuel source storage device in accordance with one embodiment of the present invention.

[0019] **FIG. 2B** illustrates a cross sectional view of a hydrogen fuel source storage device in accordance with another embodiment of the present invention.

[0020] **FIG. 2C** illustrates a bellows configuration used in the storage device of **FIG. 2B** at its maximum volume.

[0021] **FIG. 2D** illustrates a front view of a fuel source storage device in accordance with one embodiment of the present invention.

[0022] **FIG. 2E** illustrates a front view of a storage device that is compatible with the storage device of **FIG. 2D** in accordance with another embodiment of the present invention.

[0023] **FIG. 2F** illustrates a front view of a storage device that is not compatible with the storage device of **FIG. 2D** in accordance with one embodiment of the present invention.

[0024] **FIG. 2G** illustrates a side view of the storage device of **FIG. 2F**.

[0025] **FIG. 3** illustrates of a system for refilling a hydrogen fuel source storage device in accordance with one embodiment of the present invention.

[0026] **FIG. 4** illustrates of a system for producing electrical energy for a portable electronics device in accordance with one embodiment of the present invention.

## DETAILED DESCRIPTION OF THE PREFERRED EMBODIMENTS

[0027] The present invention is described in detail with reference to a few preferred embodiments as illustrated in the accompanying drawings. In the following description, numerous specific details are set forth in order to provide a thorough understanding of the present invention. It will be apparent, however, to one skilled in the art, that the present invention may be practiced without some or all of these specific details. In other instances, well known process steps and/or structures have not been described in detail in order to not unnecessarily obscure the present invention.

[0028] **FIG. 1A** illustrates a fuel cell system **10** for producing electrical energy in accordance with one embodiment of the present invention. Fuel cell system **10** comprises storage device **16**, fuel processor **15** and fuel cell **20**.

[0029] Storage device **16** and fuel processor **15** provide hydrogen to fuel cell **20**. Storage device **16** and fuel processor **15** collectively act as a 'reformed' hydrogen supply that processes a hydrogen fuel source **17** to produce hydrogen. Hydrogen fuel source **17** acts as a carrier for hydrogen and can be processed to separate hydrogen. Hydrogen fuel source **17** may include any hydrogen bearing fuel stream, aliphatic fuel source or other hydrogen carrier such as ammonia. Currently available hydrocarbon fuel sources **17** suitable for use with the present invention include methanol, ethanol, gasoline, propane, butane and natural gas, for example. Several hydrocarbon and ammonia products may also produce a suitable fuel source **17**. Liquid fuel sources **17** offer high energy densities and the ability to be readily stored and shipped.

[0030] Storage device **16** stores fuel source **17**, and may comprise a refillable and/or disposable fuel cartridge. A refillable cartridge offers a user instant recharging. In one embodiment, the cartridge includes a collapsible bladder within a hard plastic case. Storage device **16** is portable and described in further detail below.

[0031] A separate fuel pump typically controls fuel source **17** flow from storage device **16**. If system **10** is load following, then a control system meters fuel source **17** to deliver fuel source **17** to processor **15** at a flow rate determined by the required power level output of fuel cell **20**.

[0032] Fuel processor **15** processes the hydrocarbon fuel source **17** and outputs hydrogen. A hydrocarbon fuel pro-

cessor **15** heats and processes a hydrocarbon fuel source **17** in the presence of a catalyst to produce hydrogen. Fuel processor **15** comprises a reformer, which is a catalytic device that converts a liquid or gaseous hydrocarbon fuel source **17** into hydrogen and carbon dioxide. As the term is used herein, reforming refers to the process of producing hydrogen from a fuel source.

[**0033**] Fuel cell **20** electrochemically converts hydrogen and oxygen to water, generating electrical energy and heat in the process. Ambient air commonly supplies oxygen for fuel cell **20**. A pure or direct oxygen source may also be used for oxygen supply. The water often forms as a vapor, depending on the temperature of fuel cell **20** components. The electrochemical reaction also produces carbon dioxide as a byproduct for many fuel cells.

[**0034**] In one embodiment, fuel cell **20** is a low volume polymer electrolyte membrane (PEM) fuel cell suitable for use with portable applications such as consumer electronics. A polymer electrolyte membrane fuel cell comprises a membrane electrode assembly **40** that carries out the electrical energy generating electrochemical reaction. The membrane electrode assembly **40** includes a hydrogen catalyst, an oxygen catalyst and an ion conductive membrane that a) selectively conducts protons and b) electrically isolates the hydrogen catalyst from the oxygen catalyst. A hydrogen gas distribution layer contains the hydrogen catalyst and allows the diffusion of hydrogen therethrough. An oxygen gas distribution layer contains the oxygen catalyst and allows the diffusion of oxygen and hydrogen protons therethrough. The ion conductive membrane separates the hydrogen and oxygen gas distribution layers. In chemical terms, the anode comprises the hydrogen gas distribution layer and hydrogen catalyst, while the cathode comprises the oxygen gas distribution layer and oxygen catalyst.

[**0035**] A PEM fuel cell often includes a fuel cell stack having a set of bi-polar plates. A membrane electrode assembly is disposed between two bi-polar plates. Hydrogen distribution **43** occurs via a channel field on one plate while oxygen distribution **45** occurs via a channel field on a second facing plate. Specifically, a first channel field distributes hydrogen to the hydrogen gas distribution layer, while a second channel field distributes oxygen to the oxygen gas distribution layer. The 'term 'bi-polar' refers electrically to a bi-polar plate (whether comprised of one plate or two plates) sandwiched between two membrane electrode assembly layers. In this case, the bi-polar plate acts as both a negative terminal for one adjacent membrane electrode assembly and a positive terminal for a second adjacent membrane electrode assembly arranged on the opposite face of the bi-polar plate.

[**0036**] In electrical terms, the anode includes the hydrogen gas distribution layer, hydrogen catalyst and bi-polar plate. The anode acts as the negative electrode for fuel cell **20** and conducts electrons that are freed from hydrogen molecules so that they can be used externally, e.g., to power an external circuit. In a fuel cell stack, the bi-polar plates are connected in series to add the potential gained in each layer of the stack. In electrical terms, the cathode includes the oxygen gas distribution layer, oxygen catalyst and bi-polar plate. The cathode represents the positive electrode for fuel cell **20** and conducts the electrons back from the external electrical circuit to the oxygen catalyst, where they can recombine with hydrogen ions and oxygen to form water.

[**0037**] The hydrogen catalyst separates the hydrogen into protons and electrons. The ion conductive membrane blocks the electrons, and electrically isolates the chemical anode (hydrogen gas distribution layer and hydrogen catalyst) from the chemical cathode. The ion conductive membrane also selectively conducts positively charged ions. Electrically, the anode conducts electrons to a load (electrical energy is produced) or battery (energy is stored). Meanwhile, protons move through the ion conductive membrane. The protons and used electrons subsequently meet on the cathode side, and combine with oxygen to form water. The oxygen catalyst in the oxygen gas distribution layer facilitates this reaction. One common oxygen catalyst comprises platinum powder very thinly coated onto a carbon paper or cloth. Many designs employ a rough and porous catalyst to increase surface area of the platinum exposed to the hydrogen and oxygen.

[**0038**] In one embodiment, fuel cell **20** comprises a set of bi-polar plates formed from a single plate. Each plate includes channel fields on opposite faces of the plate. Since the electrical generation process in fuel cell **20** is exothermic, fuel cell **20** may implement a thermal management system to dissipate heat from the fuel cell. Further description of a fuel cell suitable for use with the present invention is included in commonly owned co-pending patent application entitled "Micro Fuel Cell Architecture" naming Ian Kaye as inventor and filed on the same day as this patent application, which is incorporated by reference for all purposes.

[**0039**] While the present invention will mainly be discussed with respect to PEM fuel cells, it is understood that the present invention may be practiced with other fuel cell architectures. The main difference between fuel cell architectures is the type of ion conductive membrane used. In one embodiment, fuel cell **20** is phosphoric acid fuel cell that employs liquid phosphoric acid for ion exchange. Solid oxide fuel cells employ a hard, non-porous ceramic compound for ion exchange and may be suitable for use with the present invention. Generally, any fuel cell architecture may benefit from the fuel storage improvements described herein. Other such fuel cell architectures include direct methanol, alkaline and molten carbonate fuel cells.

[**0040**] Fuel cell **20** generates dc voltage that may be used in a wide variety of applications. For example, electrical energy generated by fuel cell **20** may be used to power a motor or light. In one embodiment, the present invention provides 'small' fuel cells that are configured to output less than 200 watts of power (net or total). Fuel cells of this size are commonly referred to as 'micro fuel cells' and are well suited for use with portable electronics devices. In one embodiment, fuel cell **20** is configured to generate from about 1 milliwatt to about 200 watts. In another embodiment, fuel cell **20** generates from about 3 W to about 20 W. Fuel cell **20** may also be a stand-alone fuel cell, which is a single unit that produces power as long as it has an a) oxygen and b) hydrogen or a hydrocarbon fuel supply. A stand-alone fuel cell **20** that outputs from about 40 W to about 100 W is well suited for use in a laptop computer.

[**0041**] In one embodiment, fuel processor **15** is a steam reformer that only needs steam and the fuel source **17** to produce hydrogen. Several types of reformers suitable for use in fuel cell system **10** include steam reformers, auto

thermal reformers (ATR) or catalytic partial oxidizers (CPOX). ATR and CPOX reformers mix air with the fuel and steam mix. ATR and CPOX systems reform fuels such as methanol, diesel, regular unleaded gasoline and other hydrocarbons. In a specific embodiment, storage device **16** provides methanol **17** to fuel processor **15**, which reforms the methanol at about 250° C. or less and allows fuel cell system **10** use in applications where temperature is to be minimized. Further description of a fuel processor suitable for use with the present invention is included in commonly owned co-pending patent application entitled "Efficient Micro Fuel Cell Systems and Methods" naming Ian Kaye as inventor and filed on the same day as this patent application, which is incorporated by reference for all purposes.

[**0042**] **FIG. 1B** illustrates schematic operation for fuel cell system **10** in accordance with a specific embodiment of the present invention. As shown, fuel cell system **10** comprises hydrogen fuel source storage device **16**, hydrogen fuel source **17**, fuel processor **15**, fuel cell **20**, multiple pumps **21** and fans **35**, fuel lines and gas lines, and one or more valves **23**.

[**0043**] Fuel container **16** stores methanol as a hydrogen fuel source **17**. An outlet **26** of fuel container **16** provides methanol **17** into hydrogen fuel source line **25**. As shown, line **25** divides into two lines: a first line **27** that transports methanol **17** to a burner **30** for fuel processor **15** and a second line **29** that transports methanol **17** to reformer **32** in fuel processor **15**. Lines **25**, **27** and **29** may comprise plastic tubing, for example. Separate pumps **21***a* and **21***b* are provided for lines **27** and **29**, respectively, to pressurize the lines and transmit the fuel source at independent rates if desired. A model P625 pump as provided by Instech of Plymouth Meeting, Pa. is suitable to transmit liquid methanol for system **10** is suitable in this embodiment. A flow sensor or valve **23** situated on line **29** between storage device **16** and fuel processor **18** detects and communicates the amount of methanol **17** transfer between storage device **16** and reformer **32**. In conjunction with the sensor or valve **23** and suitable control, such as digital control applied by a processor that implements instructions from stored software, pump **21***b* regulates methanol **17** provision from storage device **16** to reformer **32**.

[**0044**] Fan **35***a* delivers oxygen and air from the ambient room through line **31** to regenerator **36** of fuel processor **15**. Fan **35***b* delivers oxygen and air from the ambient room through line **33** to regenerator **36** of fuel processor **15**. In this embodiment, a model AD2005DX-K70 fan as provided by Adda USA of California is suitable to transmit oxygen and air for fuel cell system **10**. A fan **37** blows cooling air over fuel cell **20** and its heat transfer appendages **46**.

[**0045**] Fuel processor **15** receives methanol **17** from storage device **16** and outputs hydrogen. Fuel processor **15** comprises burner **30**, reformer **32** and boiler **34**. Burner **30** includes an inlet that receives methanol **17** from line **27** and a catalyst that generates heat with methanol presence. Boiler **34** includes an inlet that receives methanol **17** from line **29**. The structure of boiler **34** permits heat produced in burner **30** to heat methanol **17** in boiler **34** before reformer **32** receives the methanol **17**. Boiler **34** includes an outlet that provides heated methanol **17** to reformer **32**. Reformer **32** includes an inlet that receives heated methanol **17** from boiler **34**. A catalyst in reformer **32** reacts with the methanol **17** and produces hydrogen and carbon dioxide. This reaction is slightly endothermic and draws heat from burner **30**. A hydrogen outlet of reformer **32** outputs hydrogen to line **39**. In one embodiment, fuel processor **15** also includes a preferential oxidizer that intercepts reformer **32** hydrogen exhaust and decreases the amount of carbon monoxide in the exhaust. The preferential oxidizer employs oxygen from an air inlet to the preferential oxidizer and a catalyst, such as ruthenium or platinum, that is preferential to carbon monoxide over carbon dioxide.

[**0046**] Fuel processor may also include a dewar that pre-heats air before the air enters burner **30**. The dewar also reduces heat loss from fuel cell **20** by heating the incoming air before it escapes fuel process **15**. In one sense, dewar acts as a regenerator that uses waist heat in fuel processor **15** to increase thermal management and thermal efficiency of the fuel processor. Specifically, waist heat from burner **30** may be used to pre-heat incoming air provided to burner **30** to reduce heat transfer to the air in the burner so more heat transfers to reformer **32**.

[**0047**] Line **39** transports hydrogen from fuel processor **15** to fuel cell **20**. Gaseous delivery lines **31**, **33** and **39** may comprise plastic tubing, for example. A hydrogen flow sensor (not shown) may also be added on line **39** to detect and communicate the amount of hydrogen being delivered to fuel cell **20**. In conjunction with the hydrogen flow sensor and suitable control, such as digital control applied by a processor that implements instructions from stored software, fuel processor **15** regulates hydrogen gas provision to fuel cell **20**.

[**0048**] Fuel cell **20** includes a hydrogen inlet port that receives hydrogen from line **39** and delivers it to a hydrogen intake manifold for delivery to one or more bi-polar plates and their hydrogen distribution channels **43**. An oxygen inlet port of fuel cell **20** receives oxygen from line **33** and delivers it to an oxygen intake manifold for delivery to one or more bi-polar plates and their oxygen distribution channels **45**. An anode exhaust manifold collects gases from the hydrogen distribution channels **43** and delivers them to an anode exhaust port, which outlets the exhaust gases into the ambient room. A cathode exhaust manifold collects gases from the oxygen distribution channels **45** and delivers them to a cathode exhaust port.

[**0049**] In addition to the components shown in shown in **FIG. 1B**, system **10** may also include other elements such as electronic controls, additional pumps and valves, added system sensors, manifolds, heat exchangers and electrical interconnects useful for carrying out functionality of a fuel cell system **10** that are known to one of skill in the art and omitted herein for sake of brevity.

[**0050**] **FIG. 2A** shows a simplified hydrogen fuel source storage device **16** in accordance with one embodiment of the present invention. **FIG. 2B** illustrates a cross sectional view of a storage device **16** in accordance with another embodiment of the present invention. Referring initially to **FIG. 2A**, hydrogen fuel source storage device **16** comprises a bladder **100**, housing **102**, connector **104** and memory **106**.

[**0051**] Bladder **100** contains the hydrogen fuel source **17** and conforms to the volume of the hydrogen fuel source in the bladder. In one embodiment, bladder **100** comprises a compliant structure that mechanically assumes a volume **115**

according to a volume of liquid stored therein. The volume **115** is formed by compliant walls **101** of bladder **100**, which expand and/or open when fluid is added to bladder **100**, and contract and/or collapse when fluid is removed according to the negative pressure developed upon fluid removal. In one embodiment, bladder **100** includes a sac that changes size and shape with the volume of liquid contained therein. Plastic, rubber, latex or a metal such as nickel are suitable materials for use with the walls **101** of bladder **100**. In this case, the walls **101** are compliant and change size with a changing liquid volume **115**. **FIG. 2B** illustrates a bellows design for bladder **100** that will be discussed in further detail below. Plastic walls **101** may also comprise a fire retardant plastic material. One suitable fire retardant plastic material for walls **101** is NFPA-701-99 Test 1 Polyethelyne as provided by Plasticare of Orange Park, Fla. In another embodiment, bladder **100** comprises a fixed cylinder and a piston that is pushed by a spring and moves in the cylinder to displace used fuel.

[**0052**] Bladder **100** is characterized by a maximum volume **119** when the bladder fully expands. **FIG. 2C** illustrates the bellows configuration used in the storage device of **FIG. 2B** at its maximum volume **119**. In a specific embodiment, maximum volumes for bladder **100** range from about 20 milliliters to about 4 liters. Maximum volumes from about 20 milliliters to about 400 milliliters are suitable for many portable electronics applications. A maximum volume for bladder **100** of 200 milliliters is suitable for laptop computer usage. Some extended run time systems may rely on storage devices **16** having 80 liters of maximum volume. The maximum volume for bladder **100** may differ from the fuel source capacity of storage device **16**. In some cases, storage device **16** comprises multiple bladders **100** that each contributes a maximum volume that cumulatively add to a total fuel source capacity for storage device **16**. For example, a spare storage device **16** intended for electronics power back-up may contain two bladders **100** each including 300 milliliters of hydrogen fuel source **17**.

[**0053**] While the present invention primarily refers to the storage of methanol in bladder **100** and storage device **16**, it is understood that bladder **100** and storage device **16** may contain other hydrocarbon fuel sources such as those listed above. In addition, bladder **100** may contain a fuel mixture. For example, when the fuel processor **15** fed by storage device **16** comprises a steam reformer, bladder **100** may contain a fuel mixture of a hydrocarbon fuel source and water. Hydrocarbon fuel source/water fuel mixtures are often represented as a percentage fuel source in water. In one embodiment, hydrogen fuel source **17** comprises methanol or ethanol concentrations in water in the range of 1%-99.9%. Alternatively, hydrogen fuel source **17** may comprise 100% methanol or ethanol. Other liquid fuels such as butane, propane, gasoline, military grade "JP8" etc. may also be contained in storage device **16** with concentrations in water from 5-100%. In a specific embodiment, bladder **100** stores 67% methanol by volume.

[**0054**] Housing **102** provides mechanical protection for bladder **100** and any other components of storage device **16** included within housing **102**. Housing **102** comprises a set of rigid walls **110** that contain bladder **100** and other internal components of storage device **16**. In one embodiment, all components of storage device **16** are contained within housing **102** save any portions of connector **104** that protrude out of the housing for interface with mating connector **140**. In another embodiment, connector **104** is recessed within housing **102** and housing **102** provides an outer shell that substantially defines outer bounds and shape of storage device **16**. Walls **110** collectively form an outer case or shell for storage device **16** that mechanically separates components internal to housing **102** from the external environment. Walls **110** also collectively form an interior cavity **112**. Interior cavity **112** is a space within storage device that contains bladder **100**. As described below, interior cavity **112** may comprises multiple compartments, each of which include a separate bladder **100**.

[**0055**] Rigid walls **110** may comprise a suitably stiff material such as a plastic, metal (e.g., aluminum), polycarbonate, polypropelene, carbon fiber matrix, carbon composite material, etc. Rigid walls **110** may also be formed from a fire retardant material such as a fire retardant plastic material. One suitable fire retardant plastic material for walls **110** is 8-12% weight, JLS-MC mixed with PA66 Polyamide as provided by JLS Chemical of Pomona, Calif. Rigid walls **110** may be designed according to criteria for construction of thin walled pressure vessels. Such criteria are known to those of skill in the art. In this case, walls **110** and housing **102** may be designed to withstand a maximum pressure within internal cavity **112** or for bladder **100**.

[**0056**] Housing **102** may include an elliptical (including circular) shape, a rectangular shape with chamfered comers, or other substantially consistent profile or shape in a given direction. **FIGS. 2D-2F** illustrate some suitable housing **102** shapes. For the embodiment of **FIG. 2B**, housing **102** includes a substantially consistent shape in a direction **125** that extends normally away from a tube **107** in connector **104**. In one embodiment, housing **102** comprises a transparent section or clear window to allow for visual fuel gauging.

[**0057**] In one embodiment, housing **102** is integrally formed to prevent disassembly of housing **102**. In this case, walls **110** may be permanently bonded or extruded from a common material in one piece such that access into housing **102** is only gained through destruction of walls **110** and housing **102**.

[**0058**] Connector **104** interfaces with a mating connector **140** (see **FIG. 2B**) included in an external device. Together, connector **104** and mating connector **140** permit transfer of fuel source **17** between bladder **100** and the external device. When mating connector **140** is included in fuel processor **15** or a device that includes fuel processor **15**, connector **104** and mating connector **140** interface to permit transfer of fuel source **17** from storage device **16** to the fuel processor **15**. Alternatively, when mating connector **140** is included in a hydrogen fuel source refiller, connector **104** and mating connector **140** interface to permit transfer of fuel source **17** from the refiner to storage device **16**. Interface between connector **104** and mating connector **140** may comprise any relationship and mating structures that permit fluid communication between the two connectors. Connector **104** and/or mating connector **140** may also include mechanical coupling to secure the interface, such as latching elements that bind connector **104** and mating connector **140** together until physically released. Connector **104** and mating connector **140** may also each include electrical leads that contact when the connectors are attached to enable electrical and digital communication.

[0059] Connector **104** and mating connector **140** each comprise a geometry that at least partially matches geometry of the other. Exemplary connector **104** and mating connector **140** geometries are described below with respect to **FIGS. 2D-2G**.

[0060] In one embodiment, connector **104** incorporates a quick disconnect that permits storage device **16** to be readily removed by pulling on housing **102**. This separates connector **104** and mating connector **140** and detaches any electrical links and plumbing responsible for fluid communication between storage device **16** and the device including mating connector **140**. A second storage device **16** with a quick disconnect connector **104** may then be readily inserted back into mating connector **140**. The quick disconnect thus allows rapid replacement of storage device **16** with another storage device **16** when fuel source volume levels are low. The quick disconnect connector **104** includes one port or multiple ports according to the plumbing needs of storage device **16** (e.g., fuel provision and a scrubbing bed). A quick disconnect connector **104** may also include other features to control removal requirements such as two handed operation or a high force actuator. Commercially available quick disconnect connectors are available from a variety of vendors. One suitable quick disconnect connector is model number QDC101 as provided by Beswick of Greenland, N.H. As will be described in further detail below, storage device **16** may also include a hot swappable capability that improves quick disconnect usage for connector **104** and mating connector **140**.

[0061] Connector **104** and mating connector **140** may provide an automatic shutoff capability when device **16** is removed from system **202**. In this case, each only open when connected to the other and when device **16** interfaces with device **202**. In one embodiment, device **16** comprises a small sponge or swab located on or near connector **104** to collect any fuel leakage during device connection or disconnect.

[0062] In one embodiment, one of connector **104** and mating connector **140** includes a 'male' designation and configuration while the other includes a 'female' designation and configuration. The male configuration includes portions of the connector that protrude, such as one or more pins or electrical leads. The female configuration includes portions of the connector that receive the male portions, such as holes electrically lined to receive the male portion and facilitate electrical communication. As shown in **FIG. 2G**, connector **104** on storage device **16** includes a female configuration that recesses within housing **102**. Since it is recessed, connector **104** cannot be knocked off during rough handling. Mating connector **140** is configured on a side portion of an OEM device (i.e. a laptop computer). As will be described in further detail below, mating connector **140** is also included in refilling hardware that refills storage device **16** with fuel source **17**.

[0063] Memory **106** stores information relevant to usage of storage device **16**. Memory **106** may comprise a mechanical, electrical and/or digital mechanism for information storage. In one embodiment, memory **106** comprises a digital memory source that permits an external controller to read and write from the digital memory. In another embodiment, memory **106** includes a mechanical device. One suitable mechanical device comprises "break-off" pins **158** (see **FIG. 2D**). Other forms of mechanical memory **106** may comprise discs or rods which are removed or otherwise manipulated every time a storage device **16** is refilled. For the embodiment shown in **FIG. 2D**, memory **106** is external to housing **102** and comprises a visible identification tag that uniquely identifies storage device **16**. Various types of external identification tags are known in the art and may be used with this invention. Two examples of identification identifier tags include magnetic recording devices and optical bar codes.

[0064] In one embodiment, storage device **16** is considered 'smart' since memory **106** stores information related to the performance, status and abilities of storage device **16**. A digital memory allows an external controller or logic to read and write information relevant to usage of the storage device to memory **106**. Reading from a digital memory **106** allows reception and assessment of information in memory **106** to improve usage of storage device **16**. For example, a computer that receives storage device **16** may inform a user that the storage device **16** is empty or how much fuel is left (or how much time on the system is available based on its power consumption and the amount of fuel remaining). Writing to a digital memory **106** allows information in memory **106** to be updated according to storage device **16** usage. Thus, if a user nearly depletes fuel source **17** in storage device **16** while powering a computer, the next user may be informed after the first computer writes an updated amount of fuel source **17** remaining in storage device **16** into memory **106**.

[0065] Storage device **16** specifications stored in memory **106** generally do not change with device **16** usage and may comprise a) a fuel type stored in the storage device when device **16** is dedicated to service a particular hydrocarbon fuel source **17**, b) a model number for storage device **16**, c) an identification signature for the manufacturer of storage device **16**, d) manufacture date, and e) a volume capacity for bladder **100** or storage device **16**. The model number of device **16** allows it to be distinguished from a number of similar devices.

[0066] Transient information stored in memory **106** that changes according to the status and usage of storage device **16** may comprise a) hydrogen fuel mixture information, b) a number of refills provided to storage device **16** when device **16** is configured for re-usable service, c) the last refill date, d) the refilling service provider that refilled storage device **16** when the device is configured for re-usable service, e) usage history according to a storage device identification, and f) a current volume for the storage device.

[0067] Referring now to **FIG. 2B**, storage device **16** comprises a bladder **100** with a collapsible bellows configuration **126**, housing **102**, connector **104**, memory **106**, air vent **132**, filter **134**, pressure relief valve **136**, fire retardant foam **138**, mechanical shield **142**, and fuel source filter **144**. Connector **104** comprises tube **107** and female bay **117**. Storage device **16** connects to a laptop computer **202**, which includes mating connector **140**. Mating connector **140** comprises tube **109**, reserve volume **302** and male housing **113**.

[0068] Mating connector **140** interfaces with connector **104** to permit transfer of hydrogen fuel source **17** from storage device **16** to laptop computer **202**. In one embodiment, storage device **16** resembles a battery-sized cartridge including a female connector **104** that receives a male mating connector **140**. Male housing **113** of mating connector **140** fits snugly into a female bay **117** of connector **104**

(see **FIG. 2G** for side view of a bay **117**). The fit provides mechanical support for the interface between mating connector **140** and connector **104**. Distal end of tube **107** in storage device **16** and a distal end of tube **109** in mating connector **140** align when connector **104** and mating connector **140** join. In a specific embodiment, tube **109** comprises a pointed end that pierces into tube **107** and tube **109** comprises a diameter that snugly fits into tube **107** when connector **104** and mating connector **140** are attached.

[**0069**] When mating connector **140** and connector **104** are joined as shown, a pump run by a fuel cell system **10** within laptop computer **202** draws fluid from bladder **100** into the fuel cell system **10**. More specifically, fuel source **17** travels from bladder **100**, through tube **107** in connector **104**, into and through tube **109** in mating connector **140**, and through tube **109** in laptop computer **202** to a fuel processor **15** included therein.

[**0070**] Connector **104** and mating connector **140** may also include electrical connectivity for digital communication between memory **106** and a processor or controller (see **FIG. 4**) on laptop computer **202**. **FIG. 2F** illustrates female electrical slots **155** on connector **104***b*. A mating connector **140** for connector **104***b* then includes male leads (not shown) that fit into slots **155** for electrical communication between laptop computer **202** and storage device **16**.

[**0071**] For the embodiment of **FIG. 2B**, bladder **100** comprises a collapsible bellows design **126**. One end **127***a* of bellows **126** attaches and opens to tube **107**, while the opposite end **127***b* is free to move in direction **125**. When bladder **100** fills with fuel source **17**, free end **127***b* moves in direction **125** and bellows **126** expands and increases in volume. When bladder **100** loses fuel source **17**, free end **127***b* moves opposite to direction **125** and bellows **126** collapses and decreases in volume. Free end **127***b* and bladder **100** thus compresses towards the location where fuel source **17** is outlet and where negative pressure is created to contract or collapse bellows **126** (tube **107** and connector **104** in this case). **FIG. 2C** illustrates a bellows configuration **126** at its maximum volume. As shown in **FIG. 2B**, bladder **100** is less than half full of fuel source **17** and assumes less than half the space in internal cavity **112**. Bellows **126** comprises collapsible rings **128** that fold as bellows **126** expands (the angle of each ring **128** opens) and as bellows **126** collapse (the angle of each ring **128** closes). Bellows **126** may comprise plastic or Nickel, for example. Bellows **126** may be custom molded or electroformed. Similarly designed bellows are used to protect tubular warp in machine tools, for example. Servometer Corp. of New Jersey provides several suitable commercially available nickel bellows.

[**0072**] Storage device **16** includes an air vent **132** in housing **102** that allows air to enter and exit in internal cavity **112** within housing **102** as bladder **100** changes in volume. Air vent **132** comprises one or more holes or apertures in a wall **110** of housing **102**. In operation, as fuel source **17** is consumed and drawn from storage device **16**, bladder **100** collapses and creates a negative pressure in internal cavity **112** outside of bladder **100**. Based on this negative pressure caused by a decreasing volume of bladder **100** (or increasing volume of internal cavity **112** outside bladder **100**), air enters through air vent **132** into internal cavity **112** and displaces the decreasing volume of bladder **100**. This prevents the pressure of fuel source **17** in bladder **100** from decreasing and affecting the ability of storage device **16** to provide fuel source **17** at a substantially constant pressure. When filling storage device **16**, positive pressure caused by an increasing volume of fuel source **17** and bladder **100** causes air to exit through air vent **132**. Since walls of bladder **100** separate fuel source **17** within bladder **100** from air in internal cavity **112**, air in cavity **112** does not enter bladder **100** or mix with fuel source **17**.

[**0073**] A filter **134** spans the cross section of air vent **132** and intercepts air passing through air vent **132**. In one embodiment, filter **134** comprises a hydrophobic and gas permeable filter that prevents foreign materials from entering storage device **16**. Materials blocked by filter **134** may include liquids and particles such as undesirable oils and abrasives that may affect storage device **16** performance. The hydrophobic filter also prevents fuel source **17** from escaping housing **102** in the event that bladder **100** develops a leak. Filter **134** may comprise micro porous Teflon or another micro porous material such as Teflon coated paper. A sintered metal filter, for example one with a 3 micron pore size, may also be used. One suitable filter **134** includes micro porous "Gore Tex" Teflon as provided by WL Gore Associates of Elkton, Md.

[**0074**] Mechanical shield **142** spans and covers air vent **132** and prevents foreign bodies from entering housing **102** through air vent **132** and damaging bladder **100**. In one embodiment, air vent **132** is recessed into a wall **110** such that mechanical shield **142** is flush with the outer surface of housing **102**. As shown, filter **134** is located internal to shield **142** such that shield **142** mechanically protects filter **134**. In one embodiment, mechanical shield **142** includes a flame suppressor or a suitable means of flame suppression. The mechanical shield **142** then prevents flame propagation into or out from interior cavity **112**. One suitable mechanical shield **142** includes cut to size 180×180 mesh stainless steel screen as provided by McNichols of Tampa, Fla.

[**0075**] Pressure relief valve **136** limits pressure in storage device **16**. More specifically, pressure relief valve **136** releases fuel source **17** from bladder **100** when the pressure within bladder **100** reaches a threshold pressure. The threshold pressure refers to a pressure for bladder **100** that represents the upper limit of operational pressure for fuel source **17** use in storage device **16**. Threshold pressures from about 5 psig to about 25 psig are suitable for some fuel sources **17** and storage devices **16**. A threshold pressure of about 15 psig is suitable in many cases. Other suitable threshold pressures may relate to the boiling point of the fuel source **17**, which ranges from about 2 Atm to about 10 Atm. Thus, if temperature for storage device **16** rises above the boiling point of fuel source **17**, the threshold pressure is reached and pressure relief valve **136** releases fuel source **17** from bladder **100**. During normal operation and storage, the partial pressure of fuel source **17** in bladder **100** is less than the threshold pressure and pressure relief valve **136** is not used. In the event that pressure of fuel source **17** in bladder **100** rises above the threshold pressure, pressure relief valve **136** releases fuel source **17** from bladder **100**, thereby limiting the pressure within bladder **100**.

[**0076**] In a specific embodiment, pressure relief valve **136** comprises a sprung diaphragm mechanism. The sprung diaphragm includes a diaphragm and a spring that attaches

to the diaphragm. Pressure in bladder **100** pushes the diaphragm outward against the spring force. At the threshold pressure, the diaphragm opens a port—a small hole that opens outside of housing **102**—to permit the release of fuel source **17** from bladder **100**. Spring selection permits a designer to control the threshold pressure at which the port opens and fuel source **17** escapes. In another specific embodiment, pressure relief valve **136** comprises a burst disk mechanism that includes a thin diaphragm. The diaphragm breaks outward when pressure in bladder **100** rises above the threshold pressure. The diaphragm break and the resultant opening releases fuel source **17** from bladder **100**. For either design, the port or opening may be configured to direct venting fuel vapors away from storage device **16** and into a ventilated area when installed in an electronics or OEM device.

[**0077**] A fuel source filter **144** intercepts fuel source **17** as it leaves bladder **100** and before it leaves connector **104**. As shown, filter **144** spans an entrance to tube **107** from bladder **100**. Fuel source filter **144** removes any contaminants or chemicals added to fuel source **17** for storage in bladder **100** and device **16**. In one embodiment, fuel source **17** comprises an odorant **150**, a bitterant **152** and/or a colorant **154** mixed therein. If fuel source **17** comprises an odorless liquid, odorant **150** provides olfactory stimulus to inform a person that fuel source **17** has escaped bladder **100** and storage device **16** via a path other than through tube **107** and filter **144**. Two suitable odorants **150** includes trimethyl amine at 1-10 ppm in methanol and ethyl mercaptan at 1-7 ppm weight in methanol. Fuel source filter **144** removes odorant **150** from fuel source **17** when the fuel source leaves bladder **100** through tube **107**.

[**0078**] If fuel source **17** comprises a colorless liquid, colorant **154** provides visual stimulus to inform a person that fuel source **17** has leaked or escaped from bladder **100** via a path other than through tube **107** and filter **144**. Suitable colorants **154** include acid blue **9** at 1 ppm, table 5-4 food dye, and bright green/blue erioglaicine disodium salt as provided by Dudley Chemical Corp of Lakewood, N.J. Fuel source filter **144** removes colorant **154** from hydrogen fuel source **17** when the fuel source leaves bladder **100** through tube **107**.

[**0079**] If fuel source **17** comprises liquid with no taste, a bitterant **152** may be added to provide taste stimulus that informs a person that fuel source **17** has escaped bladder **100** via a path other than through tube **107** and filter **144**. One suitable bitterant **152** includes Denatonium Benzoate at 1-50 ppm (20-50 ppm is adversely bitter) as provided by Bitrex of Edinburgh, UK. Fuel source filter **144** removes bitterant **152** from hydrogen fuel source **17** when fuel source **17** leaves bladder **100** through tube **107**. One suitable filter **144** for removing odorant **150**, bitterant **152** and/or colorant **154** includes an ultra-pure polyethersulfone membrane. Another suitable filter **144** for removing odorant **150**, bitterant **152** and/or colorant **154** from fuel source **17** includes 0.1 Advantage PS C-7012 filter as provided by Parker Hanafin Corp.

[**0080**] A fire retardant foam **138** is disposed in bladder **100**. Foam **138** is compliant and conforms in size to the size of bladder **100**. Thus, as bladder **100** collapses, foam **138** compresses. In one embodiment, foam **138** acts as a wicking foam that directs some flame behavior in storage device **16**. One suitable foam **138** is polyurethane mil Spec Mil-B-83054 as provided by Foamex of Lindwood, Pa.

[**0081**] In one embodiment, memory **106** comprises a wireless identification (ID) tag. This allows memory **106** to communicate with an external device, such as hydrogen fuel source refiner **162** described in **FIG. 3**. In this case, the external device includes an interrogator that probes memory **106** via wireless communication when storage device **16** is in range of the interrogator. The interrogator may include any hardware for performing this function such as a computer, transceiver and interrogator antenna. Coupling between the interrogator and storage device **16** may occur via radio frequency (RF) or microwave frequency radiation. When probed by the interrogator, storage device **16** replies with its identification (as stored in a digital or electrical memory **106**) and any other information stored in memory **106**, such as the status of any sensors used in storage device **16** to monitor health of the device and sensors that detect the volume of fuel source in bladder **100**. The storage device **16** identification provides a means for automated logging of data corresponding to the status of storage device **16**. The identification also facilitates inventory logging of information for numerous storage devices **16**.

[**0082**] In one embodiment, the interrogator provides power to storage device **16**. The power is transmitted by RF waves, for example, and received by a rectifier in storage device **16** that rectifies the signal, thereby providing sufficient DC power to operate any circuitry of storage device **16**. A transponder included in storage device **16** responds to a wireless stimulus. The transponder transmits signals when actuated by a signal from an external interrogator. In some cases, the transponder includes an amplifier for increasing the strength of a received incident signal, a modulator for modifying the signal with information stored by memory **106**, and an antenna or antennas for receiving and transmitting signals.

[**0083**] Wireless ID tags are commercially well known and there exists numerous manufacturers that currently offer a wide selection of RFID tags. These tags are either passive (typically operating near 125 kHz) or active (often operating near 2.45 GHz). Major manufacturers include Texas Instruments of Dallas, Tex. and Motorola of San Jose, Calif. or Alien Technologies of San Jose, Calif. Products are available for inventory control, product labeling, etc. For example, storage device **16** may use a commercial RFID tag, such as a 125-kHz tag supplied by Texas Instruments of Dallas, Tex., which includes a microchip for memory **106** and inductor for wireless communication.

[**0084**] Storage device **16** may also comprise a sensor that monitors a condition related to the health or functioning of storage device **16**. In one embodiment, the sensor comprises a wire **156** that runs about an inside surface-of housing **102** or is formed within a wall **110** housing **102** (see **FIG. 2C**). An electrical state or performance of wire **156** provides an indication of the health of housing **102**. Mechanical damage, cracking or structural compromise of housing **102** affects wire **156**—mechanically and electrically. More specifically, when wire **156** breaks, stretches or loses contact due to mechanical changes housing **102**, an electrical signal sent through wire **156** changes. The according change may be read and assessed. Thus, a break in wire **156** may be read by non-transmittance of a signal. Changes in electrical resistance of wire **156** may also provide an indication of health. In one embodiment, the sensor relies on external (e.g., RFID) probing to assess the state of wire **156** and health of

housing **102**. In this case, the interrogator powers memory **106** to test the resistance of wire **156**. The RFID memory **106** then responds with a signal indicative of the status of wire **156**. Although the sensor is shown as a single wire **156**, it is understood that more complex designs may comprise filament networks that extend two dimensionally throughout housing **102**. Each filament may then be probed for its electrical status, e.g., resistance to provide a meshed status check of integrity and health of housing **102** and storage device **16**.

[**0085**] **FIG. 2D** illustrates a front view of fuel source storage device **16***a* in accordance with one embodiment of the present invention. **FIG. 2E** illustrates a front view of a storage device **16***b* that is partially compatible with storage device **16***a*. **FIG. 2F** illustrates a front view of a storage device **16***c* that is not compatible with storage device **16***a*. **FIG. 2G** illustrates a side view of a storage device **16***c*.

[**0086**] Connector **104** and/or mating connector **140** may include a 'keyed' configuration that provides interface selectivity. For example, connector **104** may comprise a configuration unique to a particular hydrogen fuel source (e.g., methanol). In this case, mating connector **140** offers an exclusive interface that only receives a connector **104** for a methanol based storage device **16**. This keying system prevents the wrong fuel type from being installed in a device that cannot accept that fuel, e.g., gasoline burns at a higher temperature and may not be suitable for use in all methanol fuel processors. This keying system also prevents storage device **16** from being refilled with the wrong hydrogen fuel source **17**.

[**0087**] For example, storage device **16***a* of **FIG. 2D** includes a circular connector **104***a* that interfaces with a circular mating connector (not shown). Similarly, storage device **16***b* of **FIG. 2E** includes a circular connector **104***a* of the same dimensions that interfaces with the same circular mating connector as that employed for connector **104***a*. The storage device **16***c* of **FIG. 2F** includes a rectangular connector **104***b* that would not interface with the same circular mating connector. Circular connectors **104***a* may be used for methanol fuel mixtures of different blends for example, while rectangular connector **104***b* is used for ethanol.

[**0088**] The keyed configuration of connector also allows for variation of one of connector **104** or mating connector **140**, while the other remains constant. This controlled variability has numerous commercial applications. In one commercial system, connector **104** may change slightly while mating connector **140** remains constant. A common mating connector **140** may receive different storage devices **16** that share a connector **104***a* configuration. The different storage devices **16** may be produced by different manufacturers and may include varying volumes or other storage device **16** features. This permits competition for the provision of storage devices **16** but standardization of their interface. In another commercial application, an electronics device manufacturer such as Dell specifies a custom mating connector **140** configuration (e.g., a circular configuration used in their laptop computers and other electronics devices). All storage devices **16** that service these electronics devices must then include a connector **104** that matches Dell's custom mating connector **140** configuration. The electronics device manufacturer may then control who manufacturers storage devices **16** and connectors **104** for use with their electronics devices. Keyed connectors **104***a* for one electronics device manufacturer may also be designed to not fit a mating connector **140** for another computer manufacturer, e.g., Apple employs a rectangular configuration **104***b*.

[**0089**] Custom connector **104** and mating connector **140** configurations may vary based on geometry, dimensions, depth and size for example. A connector **104** or mating connector **140** may also include one or more features **149** that distinguish a custom connector or mating connector. As shown in **FIG. 2E**, feature **149** is a tab that extends into the female bay **117** of connector and mechanically distinguishes storage device **16***b* from storage device **16***a*.

[**0090**] Connector **104**/mating connector **140** configuration selectivity may also be implemented to distinguish developing technology in fuel cell system **10** or storage device **16**. By changing mating connector **140** to receive only certain connectors **104**, the present invention permits continuing development of fuel cell system **10** or storage device **16** and ensures rejection of previous storage device **16** models that are no longer suitable. For example, storage device **16***b* may represent a newer version of storage device **16***a* that is mechanically distinguished by feature **149**. An electronics device that receives storage devices **16** may include a mating connector **140** that mechanically rejects storage device **16***a* based omission of feature **149**. Memory **106** may also be digitally read to indicate incompatibility.

[**0091**] The keyed configurations shown in **FIGS. 2D-2F** may also be implemented for particular fuel source **17** types. For example, storage device **16***a* and connector **104***a* may designate a methanol fuel mixture 'A %', while storage device **16***b* and feature **149** designate a methanol fuel mixture 'B %' and storage device **16***c* and connector **104***b* designates an ethanol fuel mixture.

[**0092**] Storage devices **16***a* also comprise "break-off" pins **158** that form a mechanical memory **106**. Pins **158** indicate the number of refills for each storage device **16**. Each time storage device **16** is refilled, the refiller breaks a pin **158**. When all the pins have been removed, a mating connector to connector **104** will not accept storage device **16**. Pins **158** may comprise plastic and be molded into the cartridge housing **102** or to connector **104**.

[**0093**] In one embodiment, storage device **16** is intended for disposable use. In this case, a user purchases a storage device **16** with a full complement of methanol and disposes of storage device **16** after it is emptied. In another embodiment, storage device **16** is intended for reusable use. A reusable storage device **16** provides less waste. In this case, storage device **16** is refilled by a hydrogen fuel source refiller.

[**0094**] **FIG. 3** Illustrates a system **160** for providing a refillable hydrogen fuel source storage device **16** in accordance with one embodiment of the present invention. System **160** comprises storage device **16** and a hydrogen fuel source refiller **162**.

[**0095**] Hydrogen fuel source refiller **160** includes mating connector **140** and is configured to provide hydrogen fuel source **17** to storage device **16** when the connector **104** is coupled to mating connector **140**. Connector **104** and mating connector **140** interface to permit transfer of fuel source **17** from refiller **160** to storage device **16**. Refiller **160** comprises a fuel reserve tank **164** that stores hydrogen fuel source **17**.

Tank is suitably size to refuel numerous storage devices **16**. A pump **166** receives control signals from a refiner controller **168** that controls functioning of refiner **160** based on stored commands in refiner memory **170**. Refiller memory **170** may also include a database that stores information for each storage device **16** serviced by refiner **160**.

[**0096**] A line **172** transports fuel source **17** from tank **164** to storage device **16**. More specifically, pump **166** moves fluid fuel source **17** from tank **164** through tube **109** in mating connector **140**, into and through tube **107** in connector **104**, and into bladder **100** for storage therein. Although refiner **160** is shown refilling a single storage device **16**, it is understood that refiner **160** may comprise multiple 'bays' that each include a mating connector **140** and plumbing to refill a single storage device **16**. Refiller **160** may also include multiple tanks **164** that provided different fuel sources **17**, such as different fuel sources (e.g., methanol or ethanol) or different fuel mixtures.

[**0097**] Controller **168** also communicates with memory **106** via line **174**, which travels from controller **168**, through electrical connectivity provided by connector **104** and mating connector **140** and to memory **106**. Controller **168** may also communicate with memory **106** via wireless means as described above if controller **168** and memory **106** both include such capability. Refiller **160** includes an interrogator **176** to communicate wirelessly with a storage device **16**. Interrogator **176** comprises a transceiver and antenna based on the communication frequency employed.

[**0098**] Controller **168** reads from and writes to memory **106**. Controller **168** may read and store the usage history of a digital memory **106**. When storage device **16** includes a mechanical memory such as the break-off pins **158** described above, refiner **162** checks if there are any pins **158** remaining (either mechanically or electronically). If all the pins have been removed, refiner **162** does not accept storage device **16**. Controller **168** may also check the status of any sensors on storage device **16** used to monitor health of the device **16**, such as an RDIF sensor that detects housing integrity. This helps a re-filling services provider determine if storage device **16** can be simply be refilled, or if it needs to refurbished as well. Via controller **168** and stored logic that dictates responses to information read from memory **106**, refiller **162** is thus configured to detect a defect in storage device **16** and not transfer hydrogen fuel source **17** to storage device **16** when a predetermined memory element is present. Memory elements may include use of a pressure relief valve or information related to the status of any sensors on storage device **16**.

[**0099**] Controller **168** may also write into memory **106** information such as: the hydrogen fuel mixture information stored therein, an updated number of refills provided to storage device **16**, the refill date, the refilling service provider, and a volume for the storage device. When storage device **16** includes a mechanical memory such as the break-off pins **158** described above, refiner **162** breaks a pin **158** upon refill completion.

[**0100**] Refillable system **160** allows distribution of the hydrogen fuel source **17** to be handled flexibly. One approach is to distribute refillable storage devices **16** similar to the distribution of batteries. A consumer purchases a desired storage device **16** at a retail outlet, such as a department store, super market, airport kiosk or drug store etc. Storage device **16** selection may vary based on fuel source **17** capacity, fuel source **17** type or other features such as connectivity and smart features. Spent storage devices **16** may be dropped off at the any of the above locations for reuse, and shipped to a refilling services provider for refurbishment and refill.

[**0101**] When storage device **16** comprises a hydrogen fuel cleaning system, refiner **162** may also rejuvenate or check for replacement of the cleaning system. For the scrubbing bed as described below with respect to filter **220**, refiner **162** rejuvenates the cleaning system by forcing hydrogen through the bed (e.g., using hydrogen in tank **164**). The scrubbing bed filter **220** may also be replaced with a new bed when the storage device **16** is refilled.

[**0102**] Refilling system **160** allows a hydrogen fuel source **17** refilling provider to control refilling of storage devices **16**. Connectors **104** that require specific parts on mating connector **140** to complete interface and permit fluid transfer into storage device **16** also prevent free tampering and addition of fluids to storage device **16**. Refilling system **160** also provides a business model for distribution of storage devices **16**. Refilling system **160** also permits the hydrogen fuel source **17** refilling provider to certify fuel blends, monitor the number of refills for a particular storage device **16**, and validate storage device **16** for consumer or manufacturer confidence.

[**0103**] **FIG. 4** shows a schematic illustration of a system **200** for producing electrical energy for a portable electronics device in accordance with one embodiment of the present invention. System **200** comprises fuel processor **15** and fuel cell **20** included within an electronics device **202** and a hydrogen fuel source storage device **16** coupled to electronics device **202** via connector **104** and mating connector **140**. Electronics device **202** may comprise any portable or stationary electronics device or power application that relies on a fuel cell to generate electrical energy.

[**0104**] In one embodiment, fuel processor **15** and fuel cell **20** are incorporated into electronics device **202** (within its volume and outer housing) as an integral module, and storage device **16** is removable allowing for instant recharging. Fuel cell powered laptop computers **202** may comprise slightly modified existing products, with fuel processor **15** and fuel cell **20** and related system components fitted generally into the space provided for a battery pack. Mating connector **140** is included in this allocated space for connection to storage device **16**. Storage device **16** mechanically interfaces with electronics device **202**. In one embodiment, connectors **104** and **140** provide sufficient mechanical force to maintain position between the storage device **16** and electronics device **202**. In another embodiment, electronics device **202** includes a mechanical slot that storage device **16** fits and slides into. In one embodiment, an external cartridge-mounting bracket is provided to allow for larger storage devices **16** to be used.

[**0105**] When connector **104** and mating connector **140** interface, fuel cell system controller **214** digitally communicates with memory **106** using link **217** for bidirectional communication therebetween. In another embodiment, controller **214** uses a wireless interrogator to communicate with an RFID antennae and memory **106** included in storage device **16**. Controller **214** may read any information stored in memory **106** such as a fuel type stored in the storage

device **16**, a model number for storage device **16**, a volume capacity for bladder **100** or storage device **16**, a number of refills provided to storage device **16**, the last refill date, the refilling service provider, and a current volume for the storage device. In one commercial application, different bladder **100** volumes and storage device **16** configurations are offered based on different laptop computer manufacturers and models for a particular manufacturer. The volume may be configured to meet a specific run time requirement for a particular laptop model, for example. In this case, controller **214** estimates the remaining power in storage device **16** by comparing the fuel source **17** level since last use or refill against a consumption rate for a particular laptop computer.

[**0106**] Controller **214** may also write transient information to memory **106**, such as an updated volume for the storage device. The controller **214** communicates with a main controller **210** for computer **202** and computer memory **218** via communications bus **212**. Computer memory **218** may store instructions for the control of fuel system **10** such as read and write protocol and instructions for communication with a digital memory **106**.

[**0107**] System **200** also comprises a hydrogen fuel cleaning system. As shown, storage device **16** comprises a filter **220** in fluidic communication with hydrogen **224** output by fuel processor **15**. Filter **220** removes contaminants from the hydrogen **224** stream (or reformate) before receipt by fuel cell **20**. The reformate often includes hydrogen, carbon dioxide, carbon monoxide and other small particulates. Filter **220** may remove carbon monoxide, un-converted methanol vapor and/or hydrogen sulfide (among others). As shown, line **226** routes reformate **224** output by a hydrogen outlet of fuel processor **15**, back through mating connector **140** and connector **104**, into storage device **16** and through filter **220**, back out of in storage device **16** and to an anode inlet of fuel cell **20**. In a specific embodiment, filter **220** comprises a carbon monoxide scrubbing catalyst or absorbent arranged in a bed that hydrogen **224** stream passes through. The bed is filled with a material, such as activated carbon, potassium permanganate or cupric chloride ($CuCl_2$). The catalyst or absorbent absorbs CO, methanol vapor or $H_2S$. As described above, the scrubbing bed may be rejuvenated by passing hydrogen through the bed when the storage device **16** is refilled. Or the scrubbing bed may be replaced with a new bed when the storage device **16** is refilled. Filter **220** simplifies chemical management for fuel processor **15** and increases the performance of fuel cell **20**. Filter **220** also reduces poisoning of the fuel cell **20** catalysts with un-converted methanol vapors, by trapping the vapors prior to the hydrogen **224** stream entering fuel cell **20**. In another embodiment, a line routes unused hydrogen from fuel cell **20** in the anode exhaust to fuel processor **15** to further increase efficiency of the fuel cell system in device **202**. Further discussion of fuel cell systems suitable for use with the present invention are described in commonly owned co-pending patent application entitled "Micro Fuel Cell Architecture" naming Ian Kaye as inventor and filed on the same day as this patent application, which is incorporated by reference for all purposes.

[**0108**] Power management **216** controls power provision by fuel cell system **10** and electrochemical battery **222**. Thus, power management **216** may inform controller **214** how much power is needed for laptop computer **202** operation and controller **214** responds by sending signals to fuel cell **20**, fuel processor **15** and a pump that draws fuel from storage device **16** to alter fuel cell power production accordingly. If fuel cell system **10** runs out of fuel source **17**, then power management **216** switches to electrical power provision from battery **222**.

[**0109**] A spare storage device **16***d* is included in system **200**. Storage device **16***d* shares a connector **104** with storage device **16***a* (currently plugged in). Storage device **16***d* comprises a dual internal compartment **112***a* and **112***b* configuration internal to housing **102***d* divided by internal wall **110***d*. Internal compartment **112***a* includes a first bladder **100***b* while internal compartment **112***b* includes a second bladder **100***b*. The dual bladder design of storage device **16***d* provides extended power back up for system **200**.

[**0110**] System **200** may also be configured for 'hot swappable' capability. As the term is used herein, hot swapping of storage device **16** refers to removing storage device **16** from a fuel processor or electronics device it provides hydrogen fuel source **17** to, without shutting down the receiving device or without compromising hydrogen fuel source provision to the receiving device for a limited time. A hot swappable system implies fuel source provision when connector **104** and mating connector **140** are separated. Referring back to **FIG. 2A**, electronics device **202** comprises a reserve volume **302** that is configured to store the hydrogen fuel source **17** when connector **104** and mating connector **140** are separated.

[**0111**] The time that a receiving fuel processor or electronics device may be operated for while connector **104** and mating connector **140** are separated relates to the amount of fuel in reserve volume **302** and the rate at which the fuel processor or electronics device uses fuel source **17**. A maximum volume for reserve volume **302** characterizes the capacity of fuel source **17** that reserve volume **302** can store. In one embodiment, reserve volume **302** includes a maximum volume between about 1 milliliter and about 50 milliliters. A maximum volume between about 1 milliliter and about 4 milliliters may be suitable for some portable electronics applications.

[**0112**] For the storage device **16** shown in **FIG. 2C**, reserve volume **302** comprises the volume of tube **109** between its upstream end where it interfaces with connector **104** and its downstream end where it opens to the fuel processor **15**. The inner diameter of tube **109** may be configured to provide a particular volume maximum for reserve volume **302**. In one embodiment, tube **109** comprises plastic tubing with an outer diameter less than ¼ of an inch and a tube wall thickness between about 10 and about 50 mils.

[**0113**] For the storage device **16** shown in **FIG. 2B**, reserve volume **302** comprises a cavity within connector **140** that acts as a small reservoir for fuel source **17** entering the electronics device **202**. The cavity permits larger maximum volumes for reserve volume **302**. The cavity may alternatively be configured downstream of connector **140** within the device **202** to receive fuel source **17** from line **109** after it passes through connector **140**, e.g., closer to fuel processor **15**. In this case, the maximum volume for reserve volume **302** includes contributions from both the cavity and tubing **109** traveling from the cavity to the fuel processor.

[**0114**] Reserve volume **302** may also comprise a bladder that conforms in size and shape to the volume of fuel source

17 contained therein. A rubber sac or foldable bellows similar to those described above may be suitable. In one embodiment, tube 109 collapses on itself when mating connector 140 and connector 140 are separated. This seals tube 109 and prevent escape of any fuel source 17 contained therein.

[0115] While this invention has been described in terms of several preferred embodiments, there are alterations, permutations, and equivalents that fall within the scope of this invention which have been omitted for brevity's sake. For example, although the present invention has been described with respect to separate main controller 210 and fuel cell system controller 214, it is understood that these two functional elements may be combined into a common controller. In addition, while the present invention has been described with respect to reformed methanol fuel cell systems that include a fuel processor to convert the fuel source to hydrogen before receipt by the fuel cell, storage devices described herein are also useful for direct fuel source systems such as direct methanol fuel cell systems. In a direct fuel source system, the storage device provides the fuel source directly to the fuel cell without conversion to hydrogen by a separate fuel processor. While not described in detail, such digital control of a mechanical system is well known to one of skill in the art. It is therefore intended that the scope of the invention should be determined with reference to the appended claims.

What is claimed is:

1. A hydrogen fuel source storage device for storing a hydrogen fuel source, the storage device comprising:

a bladder that contains the hydrogen fuel source and conforms to the volume of the hydrogen fuel source in the bladder;

a housing that provides mechanical protection for the bladder;

a connector that interfaces with a mating connector to permit transfer of the fuel source between the bladder and a device that includes the mating connector; and

memory that stores information relevant to usage of the storage device.

2. The hydrogen fuel source storage device of claim 1 wherein the bladder comprises a fire retardant material.

3. The hydrogen fuel source storage device of claim 1 wherein the housing includes an air vent that allows air to enter and exit the housing as the bladder changes in volume.

4. The hydrogen fuel source storage device of claim 3 wherein the air inlet includes a hydrophobic and gas permeable filter.

5. The hydrogen fuel source storage device of claim 1 wherein the connector is recessed to not extend outside the housing.

6. The hydrogen fuel source storage device of claim 1 wherein the information relevant to usage of the fuel storage device comprises one of: a fuel type stored in the storage device, a model number for the storage device, an identification signature, hydrogen fuel mixture information, a number of refills, a volume capacity for the storage device, and a current volume for the storage device.

7. The hydrogen fuel source storage device of claim 1 wherein the bladder includes a maximum volume between about 20 milliliters and about 400 milliliters.

8. The hydrogen fuel source storage device of claim 1 wherein the hydrogen fuel source comprises methanol.

9. The hydrogen fuel source storage device of claim 1 wherein the hydrogen fuel source comprises one of an odorant, a bitterant and a colorant.

10. The hydrogen fuel source storage device of claim 9 further comprising a filter that removes the one of an odorant, a bitterant and a colorant from the hydrogen fuel source when the hydrogen fuel source leaves the storage device through the connector.

11. The hydrogen fuel source storage device of claim 1 wherein the connector comprises a unique configuration.

12. The hydrogen fuel source storage device of claim 1 wherein the memory comprises a digital memory and a RFID tag that permits communication with the digital memory using a wireless interrogator.

13. The hydrogen fuel source storage device of claim 1 wherein the memory comprises a digital memory that permits an external controller to read and write from the digital memory.

14. The hydrogen fuel source storage device of claim 1 further comprising a pressure relief that limits pressure in the storage device.

15. The hydrogen fuel source storage device of claim 1 further comprising a second bladder that contains the hydrogen fuel source and conforms to the volume of the hydrogen fuel source in the second bladder.

16. The hydrogen fuel source storage device of claim 15 further comprising a dual compartment configuration internal to the housing, wherein the first bladder is included in a first compartment and the second bladder is included in a second compartment.

17. The hydrogen fuel source storage device of claim 1 further comprising a sensor that detects mechanical damage in the housing.

18. The hydrogen fuel source storage device of claim 17 wherein the memory stores whether the sensor detects a leak.

19. The hydrogen fuel source storage device of claim 1 further comprising a fire retardant foam internal to the bladder.

20. The hydrogen fuel source storage device of claim 1 wherein the bladder comprises a cylinder, a spring and a piston, wherein the piston is pushed by the spring and moves in the cylinder to displace the hydrogen fuel source.

21. A hydrogen fuel source storage device for storing a hydrogen fuel source, the storage device comprising:

a bladder that contains the hydrogen fuel source and conforms to the volume of the hydrogen fuel source in the bladder;

a housing that provides mechanical protection for the bladder; and

a connector that interfaces with a mating connector included in a hydrogen fuel source refiner to permit transfer of the hydrogen fuel source from the hydrogen fuel source refiner to the bladder.

22. The hydrogen fuel source storage device of claim 21 wherein the bladder includes a maximum volume between about 20 milliliters and about 400 milliliters.

23. The hydrogen fuel source storage device of claim 21 further comprising a memory that indicates the number of refills for the storage device.

**24**. The hydrogen fuel source storage device of claim 23 wherein the memory comprises a mechanical memory that changes with each refill.

**25**. The hydrogen fuel source storage device of claim 24 wherein mechanical memory includes a set of pins in the connector that change in number with each refill.

**26**. The hydrogen fuel source storage device of claim 21 wherein the mating connector is also included in a portable electronics device and interface between the connector and the mating connector permits transfer of the hydrogen fuel source from the storage device to the portable electronics device.

**27**. The hydrogen fuel source storage device of claim 21 further comprising a filter in fluidic communication with hydrogen output by a fuel processor that receives the hydrogen fuel source from the storage device, wherein the filter is configured to remove one of carbon monoxide, methanol vapor or hydrogen sulfide from the hydrogen.

**28**. The hydrogen fuel source storage device of claim 21 wherein the connector comprises a unique configuration.

**29**. The hydrogen fuel source storage device of claim 28 wherein the configuration is unique to a particular hydrogen fuel source.

**30**. The hydrogen fuel source storage device of claim 29 wherein the configuration is unique to a manufacturer.

**31**. A hot swappable fuel storage system, the hot swappable system comprising:

a hydrogen fuel source storage device including a) a bladder that contains the hydrogen fuel source and conforms to the volume of the hydrogen fuel source in the bladder, b) a housing that provides mechanical protection for the bladder; and c) a connector;

a mating connector that interfaces with the connector to permit transfer of the hydrogen fuel source between the storage device and a device that includes the mating connector;

a fuel processor that includes a reformer configured to receive the hydrogen fuel source from the mating connector, configured to output hydrogen, and including a catalyst that facilitates the production of hydrogen, and

a hot swappable reserve configured to store the hydrogen fuel source when the connector and mating connector are separated.

**32**. The hot swappable system of claim 31 wherein the reserve volume includes a maximum volume between about 1 milliliter and about 50 milliliters.

**33**. The hot swappable system of claim 32 wherein the reserve volume includes a maximum volume between about 1 milliliter and about 4 milliliters.

**34**. The hot swappable system of claim 33 wherein the reserve volume comprises a collapsible tube that seals when the connector separates from the mating connector.

**35**. The hot swappable system of claim 33 wherein the device that includes the mating connector comprises a fuel processor that reforms the fuel source to produce hydrogen.

**36**. The hot swappable system of claim 35 wherein the device that includes the mating connector is a portable electronics device and interface between the connector and the mating connector permits transfer of the hydrogen fuel source from the storage device to the portable electronics device.

**37**. The hot swappable system of claim 35 wherein the reserve volume is included in a tube that at least partially transports the hydrogen fuel source from the storage device to the fuel processor.

**38**. The hot swappable system of claim 31 wherein the reserve comprises a cavity disposed in the mating connector.

**39**. The hot swappable system of claim 38 wherein the portable electronics device is a laptop computer.

**40**. The hot swappable system of claim 31 wherein the storage device comprises a memory that stores information relevant to usage of the storage device.

**41**. The hot swappable system of claim 31 wherein the bladder includes a maximum volume between about 20 milliliters and about 400 milliliters.

**42**. A system for providing a refillable hydrogen fuel source storage device, the system comprising:

a hydrogen fuel source storage device including a) a bladder that contains the hydrogen fuel source and conforms to the volume of the hydrogen fuel source in the bladder, b) a housing that provides mechanical protection for the bladder; and c) a connector that interfaces with a mating connector to permit transfer of the hydrogen fuel source between the bladder and a device that includes the mating connector; and

a hydrogen fuel source refiner including the mating connector and configured to provide hydrogen fuel source to the storage device when the connector is coupled to the mating connector.

**43**. The system of claim 42 wherein the storage device includes a memory that indicates the number of refills for the storage device.

**44**. The system of claim 43 wherein the memory comprises a mechanical memory that changes with each refill.

**45**. The system of claim 42 wherein the storage device includes a digital memory that permits a controller on the hydrogen fuel source refiner to read information from and write information to the digital memory.

**46**. The system of claim 45 wherein the hydrogen fuel source refiner is configured to detect a defect in the storage device and not transfer the hydrogen fuel source from the refiner to the storage device when a predetermined memory element is present.

**47**. The system of claim 42 wherein the storage device comprises a filter in fluidic communication with hydrogen output by a fuel processor that the storage device provides the fuel source to and the filter removes one of carbon monoxide, methanol vapor or hydrogen sulfide from the hydrogen.

**48**. The system of claim 47 wherein the hydrogen fuel source refiner rejuvenates the filter when refilling the storage device.

**49**. The system of claim 48 wherein the hydrogen fuel source refiner rejuvenates the filter using hydrogen.

**50**. The system of claim 42 wherein the bladder includes a maximum volume between about 20 milliliters and about 400 milliliters.

**51**. The system of claim 42 wherein the connector comprises a unique configuration.

**52**. The system of claim 51 wherein the configuration is unique to a particular hydrogen fuel source.

**53**. A fuel cell system for producing electrical energy, the fuel cell system comprising:

a hydrogen fuel source storage device for storing a hydrogen fuel source, the storage device including a bladder that contains the hydrogen fuel source and conforms to the volume of the hydrogen fuel source in the bladder, including a housing that provides mechanical protection for the bladder, including a memory that stores information relevant to usage of the storage device, and including a connector that interfaces with a mating connector to permit transfer of the hydrogen fuel source between the bladder and a device that includes the mating connector;

a fuel processor that includes

a reformer configured to receive the hydrogen fuel source from the mating connector, configured to output hydrogen, and including a catalyst that facilitates the production of hydrogen, and

a burner configured to provide heat to the reformer; and

a fuel cell including a fuel cell stack configured to produce electrical energy using hydrogen output by the fuel processor.

**54**. The fuel cell system of claim 53 further comprising a filter in fluidic communication with the hydrogen output by the fuel processor and the filter removes one of carbon monoxide, methanol vapor or hydrogen sulfide from the hydrogen.

**55**. The fuel cell system of claim 53 further comprising a hot swappable reserve configured to provide the hydrogen fuel source to the reformer and including a reserve volume configured to store the hydrogen fuel source when the connector and mating connector are separated.

**56**. The fuel cell system of claim 55 wherein the reserve volume includes a maximum volume between about 1 milliliter and about 50 milliliters.

**57**. The fuel cell system of claim 53 wherein the fuel processor and fuel cell are included in a portable electronics device.

**58**. The fuel cell system of claim 57 wherein the portable electronics device is a laptop computer.

**59**. The fuel cell system of claim 58 wherein the storage device comprises a memory that stores information relevant to usage of the storage device.

**60**. The fuel cell system of claim 59 wherein the laptop computer includes a fuel cell controller that communicates with the storage device memory.

* * * * *