DE W. C. CHIPMAN.
CAR-HEATERS.

No. 194,331. Patented Aug. 21, 1877.

Fig. 1.

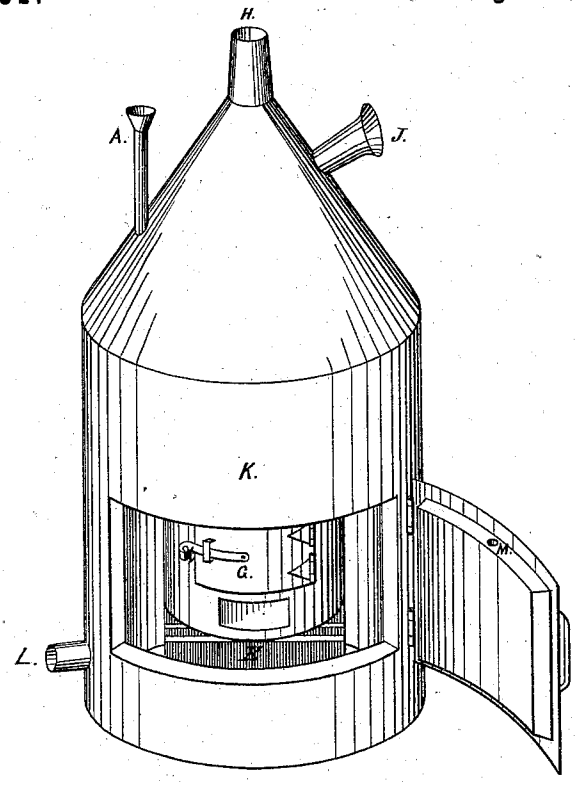

Fig. 2.

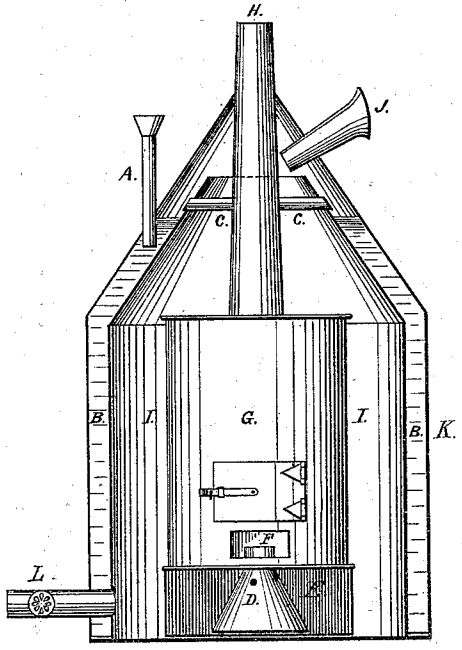

Witnesses.
John A. Hazecoster.
Aldison H. Study.

Inventor.
De Witt C. Chipman.

N. PETERS, PHOTO-LITHOGRAPHER, WASHINGTON, D. C.

UNITED STATES PATENT OFFICE.

DE WITT C. CHIPMAN, OF RICHMOND, INDIANA.

IMPROVEMENT IN CAR-HEATERS.

Specification forming part of Letters Patent No. **194,331**, dated August 21, 1877; application filed January 25, 1877.

To all whom it may concern:

Be it known that I, DE WITT C. CHIPMAN, of Richmond, Wayne county, State of Indiana, have invented a new and Improved Safety Heating Apparatus for Railway-Cars or other movable vehicles.

Said invention and improvement consists of reservoirs of water arranged around the fire in such a manner that water is discharged into the interior and onto the exterior of the heater in all cases of accident or collision.

The heater is completely surrounded by a jacket, which would ordinarily be a sufficient safeguard without the water, but both combined are believed to be a perfect protection against fire.

The heating apparatus may be any kind of heater now or that may be hereafter used, and it may be located in one or all coaches, or in the baggage-car.

I do hereby declare that the following is a full, clear, and exact description thereof, which will enable skilled artisans make and use the same, reference being had to the accompanying drawings, and to the letters of reference marked thereon, making part of this specification.

Figure 1 is a perspective, and Fig. 2 a view partly in vertical section, of the same.

A, in Fig. 1, is a funnel to introduce water into reservoir B, and B is a reservoir of water entirely surrounding the heater and hiding it from sight, as described hereinafter. H is a stove-pipe. J is a cold-air pipe for introducing air into a warm-air chamber, I, hereinafter described.

The pipe J may be located at the top, sides, bottom, or other place, and there may be as many pipes as are necessary to furnish cold air for the heater. It may be located at any convenient place on the car, or may be extended in front of the engine. The cold air may be forced into J and driven through the warm-air chamber by the momentum of the train, by fan-blower or other proper power, by pulley over the axle, or steam.

G is a stove of any construction, but is shown herein round and plain, and is used to warm the air for passenger-coaches.

K is a jacket, (seen in Fig 2,) which completely surrounds the reservoir B, the warm-air chamber I, and the heater G.

This jacket K may be made of any suitable metal, but boiler-iron is preferred for the outside, and a less tenacious metal for the inner. In case of collision boiler-iron would twist, but not break readily, thus holding the heater incased and harmless.

The door of the heater is seen at M, Fig. 1, and the orifice shows how water is put in by a funnel.

The draft of air for the heater, when the door is closed, is obtained from pipe J. When the door is closed and fastened all the interior parts of the heater are shut from sight.

E is a reservoir of water under the heater, having no cover, but inclosed in jacket K, and is used to deluge the heater on the outside when the car is overturned partially or wholly.

L is a pipe to conduct warm air into the coach or through the train, and may be prolonged into and through as many cars as desired. It is provided with registers, and one large stove would warm an entire train, thus dispensing with other stoves and fuel, and greatly diminishing the danger of fire, and increasing the carrying capacity of the train.

In Fig. 2, the parts lettered A, H, J, K, G, E, and L, perform the same functions as described in Fig. 1, but the invention is better seen in Fig. 2, as it presents the interior of the device or improvement to the eye.

B is a reservoir of water inclosed in jacket K, which surrounds warm-air chamber I and heater G.

Water is introduced into B through funnel A. B is filled with water nearly up to pipes C C. When the heater is tilted up partially and wholly, the water runs into stove-pipe H from pipes C and C, and then into the interior of the heater from the top, while water also runs over the top of B and deluges the outside of the heater. At the same time D and E are doing the like at the bottom of the heater.

D is a half globe or reservoir of water, holding the fluid securely until the heater is tipped from a perpendicular, when it discharges water through its pipe F into the bottom of the heater. B and E deluge the outside, while C C and E F deluge the inside, of the heater.

The reservoirs of water are three times the capacity of the warm-air chamber and heater, to insure the absolute extinguishment of fire.

The jacket K would ordinarily be a sufficient protection, but the reservoirs of water make an absolute protection.

A similar incasement of lamps would extinguish them. No drawing of lamps is shown, but the manner is obvious, from what has been shown in the heater.

A heater, with a jacket reaching around the stove-pipe and extending a part way down from the top, leaving the rest of the heater open to view, with like reservoirs would be a good arrangement and modification of this device, and could be used with all kinds of heaters or stoves, but the device shown in the drawings is believed to be the only device which will insure absolute extinction of fire.

Having fully described my invention, what I claim as new, and desire to secure by Letters Patent, is—

1. The combination and arrangement of the reservoirs E and D beneath the heater G, for the purposes specified.

2. The combination and arrangement of reservoirs B, D, and E, with pipes C C, whereby the inner and outer surface of the heater G is deluged at the same time, substantially as described.

DE WITT C. CHIPMAN.

Witnesses:

BENJAMIN STRATTON,

JOHN BAYER.