Nov. 12, 1929. S. HILLER 1,735,396

PROCESS AND APPARATUS FOR PULVERIZING AND DRYING SOLIDS

Original Filed July 7, 1924

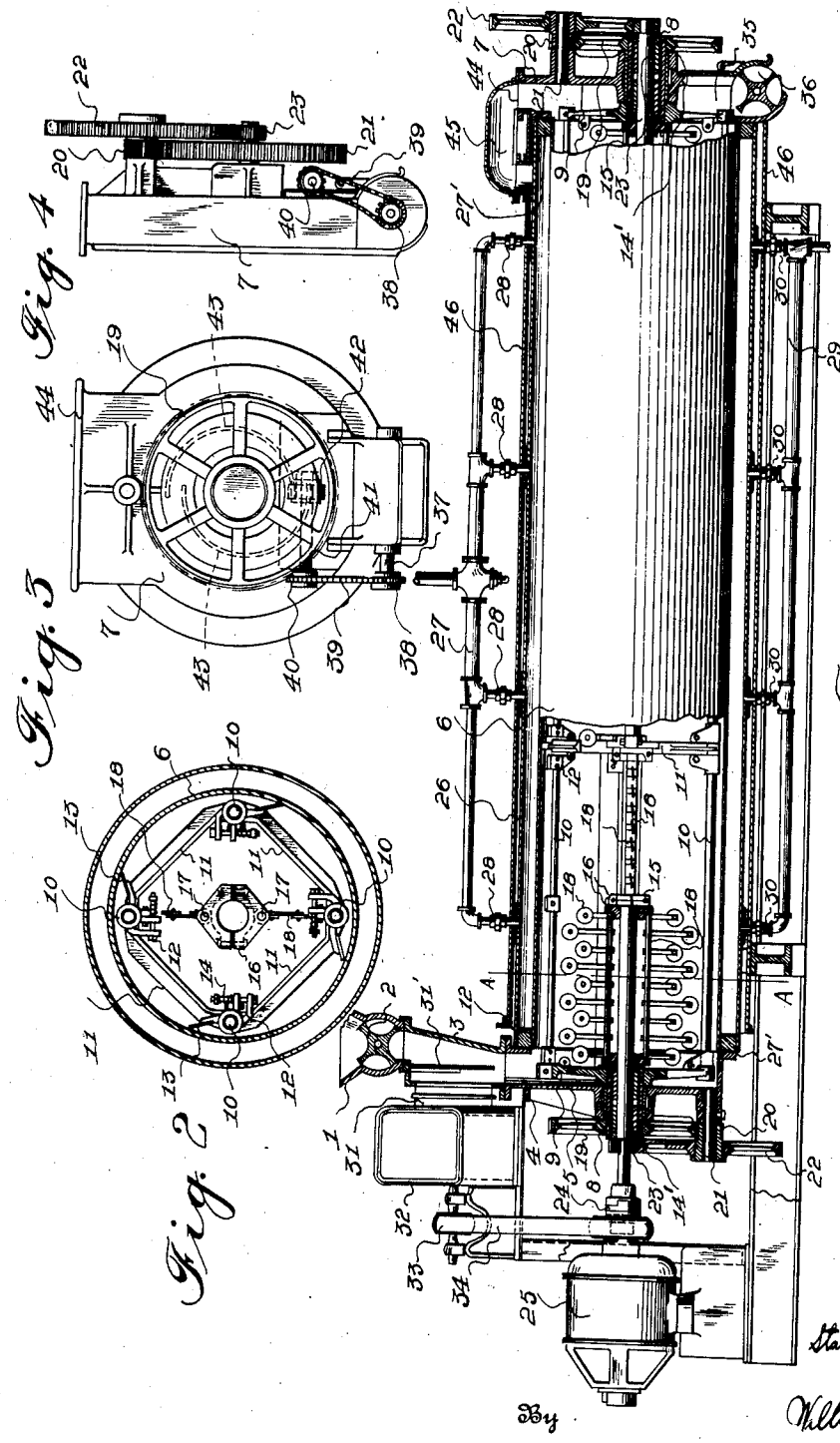

Fig. 1

Fig. 2

Fig. 3

Fig. 4

Inventor
Stanley Hiller
By William A. Strauch
Attorney

Patented Nov. 12, 1929 1,735,396

UNITED STATES PATENT OFFICE

STANLEY HILLER, OF OAKLAND, CALIFORNIA, ASSIGNOR TO STANLEY HILLER, INC., OF OAKLAND, CALIFORNIA, A CORPORATION OF CALIFORNIA

PROCESS AND APPARATUS FOR PULVERIZING AND DRYING SOLIDS

Original application filed July 7, 1924, Serial No. 731,146. Divided and this application filed May 26, 1925. Serial No. 32,950.

The present invention relates to processes and apparatus for the pulverizing or grinding, and drying or dehydrating solid substances.

More particularly the invention relates to processes and apparatus for pulverizing and drying solids such as coal, limestone, salt, sugar, gypsum, cement, chemicals, and the like; and to grinding and drying materials such as fish meals fertilizer, flours and the like; and the invention is applicable in general to the pulverizing or grinding and dehydration or drying of any material which may be subjected to impacting, beating, striking and mixing, or to mechanical subdivision, and to the simultaneous action of heat.

The preferred form for carrying out my invention comprises a fixed heated cylinder in which beaters or hammers revolving at high speeds strike and shatter the material, and dash it against the cylinder, spreading it in thin layers around the interior, while a set of slow speed revolving scrapers, wipers or lifters immediately remove the material from the heated surface, to be again struck, shattered, and impacted against the cylinder by the beaters or hammers. The scraping, wiping, or lifting and throwing, dashing and impacting actions are repeated many times a minute, the solids being started at the feed end of the cylinder and progressively advanced toward the discharge end as the drying proceeds, until the desired degree of drying or dehydrating and pulverizing or grinding has been attained, when the material is discharged from the cylinder. A continually changing layer of material is maintained in contact with the heated surfaces for very short intervals only. High temperatures may be applied to the cylinder but the material, especially when wet, may remain at relatively lower temperatures due to the rapid absorption of heat by the materials. This results in an exceptionally high rate of evaporation and rapid drying at lower temperatures than heretofore obtainable and without burning or scorching the material; and wet materials may be rapidly and continuously reduced to a dry pulverized or ground state. By providing suitable valves at the feed and discharge ends, the operation may be carried out under a vacuum or pressure.

When treating materials which may be contacted with air in pulverized heated form without danger from spontaneous combustion, large volumes of heated air are preferably drawn through the apparatus. The efficiency of operation is materially aided in this manner. While the preferred disclosures hereinafter set forth show means for circulating heated air through the material it will be understood that this may be omitted in treating coal and like inflammable materials.

A wide field for the invention exists in the production of dry pulverized coals, cokes, charcoals and other carbonaceous materials. It is well known that finely divided or pulverized carbon or coal is highly inflammable, and when properly injected into a combustion chamber in air jets or other suitable burning arrangements, it will burn like a gas or oil flame leaving no unburned coal as waste in ash or clinker. In my improved pulverizing and drying apparatus, wet lump, or crushed coal can be passed continuously into the apparatus and is cracked, dashed to pieces, impacted and pulverized against the heated shell. The moisture is freed from the solid structure by the dividing action, and is literally thrown out of the cells against the heated surface by the inertia effect as the pieces are beaten and crushed by the hammers and against each other, and against the heated shell. As the treatment proceeds the material drys and pulverizes progressively and may be reduced to a substantially bone dry powder. The combustible gases driven off may be burned to furnish heat or may be salvaged for other uses. By providing a unit of proper size the impalpably powdered product may be produced as required and fed directly to a burner without necessity for storing the powdered product. In this way no opportunity for absorption of moisture by the powdered product is afforded and an economical continuous stoker for reducing fuel to a dry powdered state as required by the burners is provided. The

combustible gases evolved from the fuel can be burned directly in the combustion chamber and a highly efficient stoker is provided.

A preferred form of apparatus for carrying out my invention is disclosed in the accompanying drawings of which

Figure 1 is a side elevation partially in section showing the preferred form of apparatus.

Figure 2 is a section taken along line A—A of Figure 1.

Figure 3 is an end view of the discharge end of the apparatus.

Figure 4 is a side elevation showing the discharge end of the apparatus.

The solids or materials to be treated are fed through hopper 1 to a valve 2 which is driven continuously in any suitable manner to deliver the materials at a predetermined and controlled rate through feed passage 3. From passage 3 the material drops through a passage 4 into the feed end casting or head 5 of the apparatus. A cylinder 6 is supported at one end in and communicates with head or casting 5, and at its other end the cylinder 6 is supported in and communicates with a discharge head or casting 7. Journaled in the heads 5 and 7 are drive sleeves 8 which are secured to the lifter supporting spiders 9. Supported in and connecting the spiders 9 into a rigid cage or structure are rods 10 which extend through the cylinder 6 and are spaced apart and strengthened by members 11. Supported and journaled at spaced points along the rods 10 adjacent the strengthening members 11 are spider supporting members 12 on which are supported the scraping, wiping, or lifting bars, 13. Springs 14 seated between extensions or shoulders of members 11 are arranged to force the members 12 about the rods 10 until the wipers or lifters 13 engage the interior surface of cylinder 6. Sets of bushings 14′ are provided inside of the sleeves 8, and journaled for rotation in these bushings is a high speed beater or hammer shaft 15 extending through the cylinder 6. Supported within the cylinder 6 on the shaft 15 by means of split collars 16 and the diametrically spaced rods 17 are a series of adjacent pivoted hammers or beaters 18 arranged in spaced sections. The adjacent sections of pivoted hammers or beaters are arranged so that when shaft 15 is rotated the hammers will extend at right angles to each other to effect the advance of the materials through the cylinder 6, the hammers or beaters are preferably given a slight angle or twist with relation to the axis of the cylinder so that as the material is struck it is thrown slightly forward. The feed may however be effected by inclining the cylinder or giving the bars 13 a slight helical twist, or any combination of these expedients may be utilized.

Sleeves 8 have secured thereto and are driven by spur gears 19 at each end of the unit, and gears 19 mesh with and are driven by pinions 21. Pinions 20 are rotatably mounted on stub shafts 21 and pinions 20 are integral with and driven by spur gears 22. Gears 22 are in turn driven by pinions 23 which are rigidly secured to and rotatable with the beater shaft 15. Beater shaft 15 is driven through a clutch 24 by a suitable motor 25 or in any other desired manner.

The cylinder 6 is heated by means of a jacket preferably formed by enclosing it in a concentric cylinder 26 which is spaced away from cylinder 6 by suitable mud rings 27′ which form the ends of the heating jacket. Heating steam under pressure is circulated through the jackets by means of inlet connections 27 and 28 and outlet connections 29 and 30. While steam is the preferred medium for supplying the jacket heat, it will be understood that direct products of combustion may be utilized to heat the cylinder by providing suitable arrangements therefor, and where low temperature operation is desirable, water heated to the proper temperature may be utilized.

In the treatment of materials in accordance with my process gases and vapors are evolved which are withdrawn through the inlet passage 4 past a baffle plate 31′ arranged to cause the deposit of any suspended solid particles and through vapor outlet passage 31 by means of an exhaust fan or pump 32 which is driven by a pulley 33 and belt 34 from the motor 25. The materials are passed through the cylinder 6 continuously as the treatment thereof proceeds and are discharged through the outlet 35 in the discharge head 7 into a continuously rotating discharge valve 36. The valve 36 is provided with pockets and maintains a mechanical seal against the admission of cold air, as the material is discharged. Valve 36 is driven by means of a shaft 37 which in turn is driven by sprocket 38 secured thereto, chain 39, and a sprocket 40. The sprocket 40 is mounted on and driven by a spindle 41 which in turn is driven by a pinion 42. The pinion 42 is rotated at its proper relative speed by means of the spiral drive members or teeth 43 (Fig. 3) carried on the gear 21, at the discharge end of the unit.

By closing the opening 44 of the discharge head a complete unit is provided for treating materials from which air should be excluded during the process of heating and drying. However, many materials such for example as fish meal, limestone, and the like may be contacted with large volumes of air during the process without causing injury to the quality or danger from spontaneous combustion. In such cases the efficiency of the unit in drying may be considerably increased by passing large volumes of heated air through the cylinder 6 as the treatment of the material pro-

ceeds. For treating this type of materials the opening 44 is connected by an air duct or passage 45 to an air heating jacket formed by an incasing cylinder 46 which surrounds the jacket cylinder 26 and is closed at the discharge end of the unit but is open to the atmosphere at the feed end thereof. In operation of this form air is drawn between the outside of the jacket cylinder 26 and the inside of the cylinder 46 is heated and then drawn in large volumes through the cylinder 26 from the discharge end to the feed end by action of the fan 32, contacting with and aiding in the rapid drying of the materials under treatment.

Operation

In operation the materials are preferably crushed to a size which will readily pass through the valve 2 if of a nature which usually comes in large pieces, such for example as coal or limestone. The material to be treated is fed continuously and at a predetermined and measured rate into the cylinder 6 by means of the valve 2. The beaters or hammers 18 are of suitable size and weight to act as pulverizers for the particular material being handled and are preferably provided with a slightly inclined striking face to feed the materials forward as the hammers are rotated. The hammers or beaters are rotated at speeds of from several hundred revolutions a minute and upward in accordance with the particular material being treated and the hammers will fly out radially about their individual pistons. As the material drops into the cylinder it is dashed by the hammers against the heated walls of the cylinder 6. Wiping or lifting members 13 are rotated at relatively low speeds which usually range from 10 to 20 or more revolutions a minute. The relative speeds of the wipers or lifters must be such that the material is lifted and permitted to drop through the cylinder into the path of the beaters or hammers to be struck, dashed, and spread against the heated cylinder 6 in a thin rapidly changing layer with the material being advanced continuously through the cylinder from the feed to the discharge end. The rate of feeding material through the valves 2 and 36 is timed so that the proper amount of material is in the cylinder 6 to maintain the proper continuous operation of the unit. The heating action of the cylinder dries off the moisture, and by decrepitation aids in the dividing or breaking up of the particles of material, and as the material advances through the cylinder it becomes progressively drier and more finely divided. The material is dashed from the beaters against the walls of the cylinders, wiped or scraped from the cylinder walls, lifted through the cylinder and dropped back to the hammers, and mixed in rapid succession, and the repeated heating, beating, impacting, mixing and pulverizing actions continue as the material advances through the cylinder, until it is discharged from the valve 36 dried and pulverized or ground to the desired degree. As the materials pass through the unit, the moisture is freed therefrom and vaporized by the action of heat and the evolved vapors are continuously withdrawn by the action of the blower exhaust fan 32 and are discharged into suitable condensing or deodorizing means, or to the atmosphere, in accordance with the nature thereof. When the air heating jacket 46 together with the connections 45 are used, large volumes of heated dry air are drawn through the material by the action of the exhaust fan or pump, the material is intimately contacted with the air currents as it falls through the cylinder and the heated air acts as a vehicle for the rapid and effective removal of the moisture and volatile constitutents of the material being treated. When the air circulation is utilized the materials are mixed with the heated air currents and a very rapid drying action is attained. When treating materials such as coal or inflammable matter subject to spontaneous combustion the air circulation may be cut off and the drying and pulverizing may be carried out at relatively low temperatures due to the efficient vaporing action without danger from explosion. By utilizing my apparatus rapid and efficient drying may be carried out at atmospheric pressures and at temperatures below or above 212 degrees Fahrenheit. The jacket may be heated by warm water or by means of steam under pressure up to 100 pounds per square inch or more, and may be heated still higher by utilizing heated products of combustion in the jacket, as disclosed in my copending application S. N. 731,146, filed July 7, 1924, of which the present case is a division, or as disclosed in my copending application S. N. 32,951, filed May 26, 1925.

Having described a preferred embodiment of my invention, what is desired to be secured by Letters Patent and claimed as new is:

1. A continuous process of drying and pulverizing solids which comprises continuously advancing the solids through an enclosed space with heated walls; impacting and throwing the same against the walls of said enclosed space so as to comminute same; quickly removing the same from said walls into said enclosed space; and repeating the impacting and removing steps in rapid succession as the solids advance through said enclosed space.

2. A continuous process of pulverizing and dehydrating solids which comprises the steps of feeding the same into the path of hammers rotating at high speed; impacting and throwing the same against the interior surface of a heated cylinder so as to comminute same; removing the same from said surface at relatively lower speeds; dropping the removed

solids back into the path of the beaters to be mixed and again impacted against the heated surface; repeating the impacting, mixing, and removing steps in rapid succession; and continuously advancing the same through said cylinder as the impacting, mixing and removing proceeds.

3. A continuous process of drying and simultaneously dividing solid substances which comprises continuously feeding the substance into an enclosed cylindrical space with heated walls; impacting and throwing the substance against said walls so as to comminute same; quickly removing the substance from said walls into said space; repeating the impacting and removing steps in rapid succession; advancing the substance continuously through said space in a manner to maintain a relatively thin, rapidly changing layer of the substance on said walls; and continuously discharging the treated substance from said space.

4. A continuous process of dehydrating solids which comprises continuously advancing the solids through an enclosed space; impacting the same against the walls of said enclosed space with comminuting force; quickly removing the same from the walls into said enclosed space; repeating the impacting and removing step in rapid succession as the solids advance through said enclosed space and contacting the solids with heated air as the impacting, removing and advancing proceeds.

5. A continuous process of dehydrating and dividing solids, which comprises the steps of continuously feeding the solids to be treated into an enclosed space; advancing the solids through and impacting the same against the walls of said space to comminute same, and removing the same from the walls of said space; continuously repeating the advancing, impacting, and removing steps in rapid succession; and continuously discharging the solids from said space; said feeding, advancing and discharging steps being carried forward in definitely timed relation and in a manner to maintain a comparatively thin layer of rapidly changing continuously advancing material in contact with said walls of said space.

6. The process as set forth in claim 5 together with the step of passing currents of gases through said space to be mixed and contacted with the solids under treatment.

In testimony whereof I affix my signature.

STANLEY HILLER.