(12) INTERNATIONAL APPLICATION PUBLISHED UNDER THE PATENT COOPERATION TREATY (PCT)

(19) World Intellectual Property Organization
International Bureau

(43) International Publication Date
13 December 2007 (13.12.2007)

PCT

(10) International Publication Number
WO 2007/140806 A1

(51) International Patent Classification:
H04M 1/725 (2006.01)

(21) International Application Number:
PCT/EP2006/005525

(22) International Filing Date: 9 June 2006 (09.06.2006)

(25) Filing Language: English

(26) Publication Language: English

(71) Applicant *(for all designated States except US)*: **NOKIA CORPORATION** [FI/FI]; Keilalahdentie 4, FIN-02150 Espoo (FI).

(72) Inventors; and

(75) Inventors/Applicants *(for US only)*: **NURMI, Juha, H.** [FI/FI]; Asemakatu 4.A.3., FIN-24100 Salo (FI). **SAARINEN, Kaj** [FI/JP]; 1-1-13 Koyamadai Shinagawa-ku, Tokyo 142-0061 (JP). **RAUTANEN, Tero** [FI/FI]; Munterinkatu 6 E 62, FIN-20360 Turku (FI).

(74) Agent: **VAN WALSTIJN, B., Gerard, G.**; Nordic Patent Service ApS, Pilestraede 58, DK-1112 Copenhagen K (DK).

(81) Designated States *(unless otherwise indicated, for every kind of national protection available)*: AE, AG, AL, AM, AT, AU, AZ, BA, BB, BG, BR, BW, BY, BZ, CA, CH, CN, CO, CR, CU, CZ, DE, DK, DM, DZ, EC, EE, EG, ES, FI, GB, GD, GE, GH, GM, HR, HU, ID, IL, IN, IS, JP, KE, KG, KM, KN, KP, KR, KZ, LC, LK, LR, LS, LT, LU, LV, LY, MA, MD, MG, MK, MN, MW, MX, MZ, NA, NG, NI, NO, NZ, OM, PG, PH, PL, PT, RO, RS, RU, SC, SD, SE, SG, SK, SL, SM, SY, TJ, TM, TN, TR, TT, TZ, UA, UG, US, UZ, VC, VN, ZA, ZM, ZW.

(84) Designated States *(unless otherwise indicated, for every kind of regional protection available)*: ARIPO (BW, GH, GM, KE, LS, MW, MZ, NA, SD, SL, SZ, TZ, UG, ZM, ZW), Eurasian (AM, AZ, BY, KG, KZ, MD, RU, TJ, TM), European (AT, BE, BG, CH, CY, CZ, DE, DK, EE, ES, FI, FR, GB, GR, HU, IE, IS, IT, LT, LU, LV, MC, NL, PL, PT, RO, SE, SI, SK, TR), OAPI (BF, BJ, CF, CG, CI, CM, GA, GN, GQ, GW, ML, MR, NE, SN, TD, TG).

Published:
— *with international search report*

[Continued on next page]

(54) Title: FINGERPRINT ACTIVATED QUICK FUNCTION SELECTION

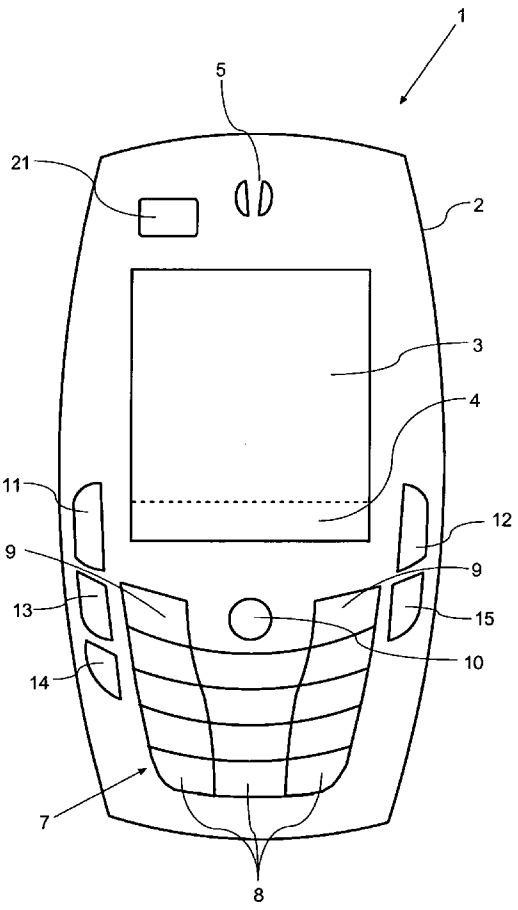

(57) Abstract: A device (1) such as a laptop computer includes a fingerprint sensor (21) and has a specific function to be performed associated with at least two of the fingerprints of an authorized user of the device (1). The device performs the specific function when an authorized user places a finger on the fingerprint sensor (21). The functions associated with the fingerprints of the authorized users can be quickly-accessed even when a security or keyboard lock is active. A mobile communication terminal' (1) includes a fingerprint sensor (21) in a call handling key (11). Calls are answered, rejected or initiated when an authorized user places a finger on the fingerprint sensor (21).

WO 2007/140806 A1

For two-letter codes and other abbreviations, refer to the "Guidance Notes on Codes and Abbreviations" appearing at the beginning of each regular issue of the PCT Gazette.

FINGERPRINT ACTIVATED QUICK FUNCTION SELECTION

FIELD OF THE INVENTION

The present invention relates to devices in which functions are activated by user input, in particular to devices in which user input is performed with a fingerprint sensor. The invention relates to a method of quickly selecting or activating a function in a device, in particular in a device the operation of which is controlled by a processor.

BACKGROUND OF THE INVENTION

It is known to use fingerprint sensors on personal computers and on mobile handsets, in particular to enable secure access (authentication) for a number of users based on a fingerprint. Hereto, a database connected to the fingerprint sensor contains information relating to authorized users by means of fingerprint data.

Most personal computers and mobile handsets are provided with a security lock (or just a keypad lock "keylock") function, i.e. a state of the device in which the processor will ignore any key activations, except those that deactivate the lock function.

Many personal computers and telephone headsets are also provided with quick access keys (shortcuts) by means of which a user can activate a specific function associated with a given quick access key by a single press of the key.

However, a problem associated with the security or keypad lock function is that it has to be opened first before any quick selection can be done with the quick access keys. This slows down quick selection and thereby undermines the concept of quick selection keys.

In most mobile handsets the keylock function is deactivated for the "call answer key" in order to enable a user to easily answer an incoming call even if the keylock is active. However, a problem associated with this way of handling keylock on a mobile handset is that incoming calls may also be answered either by accident (when phone is in a pocket for example) or intentionally by an unauthorized third-person should they get access to the handset.

DISCLOSURE OF THE INVENTION

On this background, it is an object of the present invention to provide a device, which allows quick selection of functions when a keylock is active. This object is achieved by providing a device comprising a processor controlling the operation of the device, the processor is configured to perform a multitude of functions, a fingerprint sensor for scanning a fingerprint of a user, a memory in which the fingerprints of at least two different fingers of one and the same user are stored, a specific function to be performed being associated with each of the at least two fingerprints, and the processor being configured to perform the function associated with a fingerprint when the fingerprint scanned by the fingerprint sensor matches one of the stored fingerprints.

Since the human hand normally has 10 fingers, each having a different print, up to ten different functions can be activated quickly with the fingerprint sensor. Further, only a single sensor is required for activating up to 10 different quick selection functions, where conventionally up to ten keys were required. Thus, the size of the user interface can be reduced.

The specific function can be the start of an application or of an applet on the device.

Preferably, the device further comprises a keypad, in which case the device has at least one mode in which a security lock or a keylock is applied, and the processor is configured to perform the command associated with a given fingerprint when the fingerprint sensor scans the given fingerprint, also when the device is in a mode in which the security lock or keylock is active.

The device may comprise one or more further fingerprint sensors, in which case a specific function to be performed is associated with each of the at least two fingerprints and the further fingerprint sensor. Thus, an increased number quick selection functions can be activated

The fingerprint data of one or more authorized users can be stored in the device to support multi-user operation.

It is also an object of the invention that the device is coupled to a secure network.

It is another object of the invention to provide an automated teller machine including the device.

An object above is also achieved by providing a method for operating a device with a user interface that includes a fingerprint sensor comprising associating a specific function to be performed with each of at least two fingers of a user, and performing the specific function associated with a finger when the fingerprint sensor scans a fingerprint matching one of the at least two fingers.

Preferably, the device is controlled by a processor operating in response to user input via a keyboard, further comprising the step of performing the specific function associated with a fingerprint when the fingerprint sensor scans a fingerprint matching one of the at least two fingers when a security lock or keypad lock is active. Thus, the user does not waste time to unlock the device when trying to activate a quick selection function.

The method may further comprise the step of storing fingerprint data of one or more authorized users of the device. Thus, the device can be used in a multi-user environment.

The step of performing a function may include performing an application or an applet.

It is another object of the present invention to provide a mobile communication terminal in which the risk of inadvertedly answering a call is reduced. This object is achieved by providing a mobile communication terminal comprising a processor controlling the operation of the

terminal, a fingerprint sensor for scanning a fingerprint of a user of the terminal, the processor being configured to answer an incoming call when a fingerprint scanned by the fingerprint sensor matches a stored fingerprint during an incoming call, and/or the processor being configured to initiate an outgoing call when a fingerprint scanned by the fingerprint sensor matches a stored fingerprint and a telephone number has been keyed in, selected or identified.

Thus, an authorized user can quickly answer or place a call, with a minimized risk of inadverted call initiations, -answers or -rejections. This will improve confidence of users in the device and thereby the acceptance of the technology.

Preferably, the fingerprint sensor is integrated in a combined onhook/offhook key, in a separate onhook key and/or in a separate offhook key.

Alternatively, the fingerprint sensor can be integrated in a multifunctional softkey.

The mobile communication terminal may have at least one mode of operation or state in which a keylock is applied and wherein the processor is configured to answer an incoming call when a fingerprint scanned by the fingerprint sensor matches a stored fingerprint during an incoming call, also when the device is in a mode in which the keypad lock is active, and/or wherein the processor is configured to initiate an outgoing call when a fingerprint scanned by the fingerprint sensor matches a stored fingerprint when a telephone number has been keyed

in, selected or identified, also when the device is in a mode in which the keypad lock is active.

The fingerprint data of one or more authorized users may be stored in the terminal to support multi-user operation.

An object above is also achieved by providing a method for operating a mobile communication terminal device with a user interface that includes a fingerprint sensor, comprising answering an incoming call when a fingerprint scanned by the fingerprint sensor matches a stored fingerprint during an incoming call, and/or initiating an outgoing call when a fingerprint scanned by the fingerprint sensor matches a stored fingerprint and a telephone number has been keyed in, selected or identified.

Preferably, the fingerprint sensor is integrated in a combined onhook/offhook key, in a separate onhook key, in a separate off hook key and/or in a multifunctional softkey

The device may be controlled by a processor operating in response to user input via a keyboard, further comprising the step of performing the specific function associated with a finger when the fingerprint sensor scans a fingerprint matching one of the at least two fingers when a security lock or keypad lock is active.

Further objects, features, advantages and properties of the device, mobile communication terminal and methods according to the invention will become apparent from the detailed description.

BRIEF DESCRIPTION OF THE DRAWINGS

In the following detailed portion of the present description, the invention will be explained in more detail with reference to the exemplary embodiments shown in the drawings, in which:

Fig. 1 is a diagrammatic front view on a device according to a first embodiment of the invention,
Fig. 2 is a block diagram illustrating the general architecture of the device of Fig. 1,
Fig. 2A is a flow chart illustrating the operation of the device shown in Fig. 1
Fig. 3 is an elevated view on a device according to a second embodiment of the invention,
Fig. 4 is a diagrammatic elevated view on the device according to Fig. 3, and
Fig. 5 is a diagrammatic front view on a device according to a third embodiment of the invention.

DETAILED DESCRIPTION OF PREFERRED EMBODIMENTS

In the following detailed description, the device and the method according to the invention in the form of a personal computer, PDA, mobile terminal or a mobile communication terminal in the form of a cellular/mobile phone, will be described by the preferred embodiments. The invention can, however, also be carried out with any other device the operation of which controlled by a processor.

Fig. 1 illustrates a first embodiment of a mobile terminal according to the invention in the form of a

mobile telephone by a front view. The mobile phone 1 comprises a user interface having a housing 2, a display 3, an on/off button (not shown), a speaker 5 (only the openings are shown), and a microphone 6 (not visible in Fig. 1). The phone 1 according to the first preferred embodiment is adapted for communication via a cellular network, such as the GSM 900/1800 MHz network, but could just as well be adapted for use with a Code Division Multiple Access (CDMA) network, a 3G network, or a TCP/IP-based network to cover a possible VoIP-network (e.g. via WLAN, WIMAX or similar) or a mix of VoIP and Cellular such as UMA (Universal Mobile Access).

The keypad 7 has a first group of keys 8 as alphanumeric keys, by means of which the user can enter a telephone number, write a text message (SMS), write a name (associated with the phone number), etc. Each of the twelve alphanumeric keys 8 is provided with a figure "0-9" or a sign "#" or "*", respectively. In alpha mode each key is associated with a number of letters and special signs used in the text editing.

The keypad 7 has additionally a second group of keys comprising two softkeys 9, two call handling keys (offhook key 11 and onhook key 12), and a 5-way navigation key 10 (up, down, left, right and center: select/activate). The function of the softkeys 9 depends on the state of the phone, and navigation in the menu is performed by using the navigation-key. The present function of the softkeys 9 is shown in separate fields (soft labels) in a dedicated area 4 of the display 3, just above the softkeys 9. The two call handling keys 11,12 are used for establishing a call or a conference call, terminating a

call or rejecting an incoming call. This key layout is characteristic for e.g. the Nokia 6600™ phone.

The navigation key 10 is a four- or five-way key which can be used for cursor movement, scrolling and selecting (five-way key) and is placed centrally on the front surface of the phone between the display 3 and the group of alphanumeric keys 7. A dedicated menu key 13 gives direct access to the menu structure and a copy and paste key 14 assist in collaboration with the softkeys in copying and pasting text or graphics. A dedicated clear key 15 serves to delete items.

A fingerprint sensor 21 is placed at an easily accessible position on the housing. In the present embodiment the sensor is shown to be placed on the front surface of the mobile communication terminal. However, the fingerprint sensor could be placed on other surfaces of the terminal, such as the sides, top, bottom or back.

A releasable rear cover (not shown) gives access to the SIM card (not shown), and the battery pack (not shown) in the back of the phone that supplies electrical power for the electronic components of the mobile phone 1.

The mobile phone 1 has a flat display 3 that is typically made of an LCD with optional back lighting, such as a TFT matrix capable of displaying color images. A touch screen (not shown) may be applied on top of the LCD display 3.

Fig. 2 illustrates in block diagram form the general architecture of a mobile phone 1 constructed in accordance with the present invention. A processor 18 controls the communication with the cellular network via the transmit-

ter/receiver circuit 19 and an internal antenna 20. A microphone 6 transforms the user's speech into analogue signals, the analogue signals formed thereby are A/D converted in an A/D converter (not shown) before the speech is encoded in a digital signal processing unit 17 (DSP). The encoded speech signal is transferred to the processor 18, which e.g. supports the GSM terminal software. The processor 18 also forms the interface to the peripheral units of the apparatus, including a RAM memory and a ROM or Flash ROM memory 16, the graphical display 3, the fingerprint sensor 21 and keypad 7 (as well as data, power supply, etc.). The digital signal-processing unit 17 speech-decodes the signal, which is transferred from the processor 18 to the speaker 5 via a D/A converter (not shown).

As is also illustrated in the flowchart in Fig. 2A, after a fingerprint is registered by the fingerprint sensor 21, the signal from the fingerprint sensor is processed with a fingerprint algorithm that is either included in the hardware of the sensor 21 or in the software running on the processor 18. A variety of fingerprint processing algorithms have been developed and experimented with over the years, each with a varying degree of success. The basic idea behind all of these algorithms is to identify and locate unique points of the fingerprint referred to as minutia. The two predominant types of minutia are ridge endings and bifurcations. A ridge ending is formed when a ridge of a fingerprint no longer continues along its path, it simply stops or ends. A bifurcation on the other hand is formed when a ridge of a fingerprint splits (bifurcates) into two ridges or, conversely, when two ridges merge into one ridge. Fingerprint identification algorithms are concerned with identifying every minutia

of the fingerprint (both ridge endings and bifurcations) and associating with each minutia found, three positional identifiers (x, y, and theta). These three parameters locate the minutia in an arbitrary (but fixed) Cartesian coordinate system where x and y map the position of the minutia and theta defines its angle of orientation with respect to one of the axes. A match between two fingerprints is made when the x, y, and theta of one fingerprint match (or nearly match) the x, y, and theta of another print. Various other known fingerprint identification algorithms can be used for the present invention, and since the exact nature of the fingerprint identification algorithm is not essential for the present invention, these other algorithms are not described in detail here.

The fingerprint data of at least two of the fingers of an authorized user (such as for example the owner of the terminal) have been stored in the terminal 1. The stored fingerprint data can have been generated with the fingerprint sensor 21 on the terminal itself, or be transmitted/downloaded to the terminal from another source. A function to be performed is associated with each of the at least two fingerprints of the user. The association of functions to the various fingerprints is in this preferred embodiment carried out via the user interface, but the functions may alternatively be preprogrammed. A group of functions to choose from may be preselected. The functions to be performed can be simple functions, applets, or applications.

The fingerprint sensor 21 scans the fingerprint of any finger that is placed thereon (step 2.1). The processor 18 monitors the output from the fingerprint sensor 21 and

compares it with the stored fingerprint data using the fingerprint algorithm (step 2.2 and 2.3). When there is a match, the processor 18 performs the function associated with the fingerprint that has been scanned by the fingerprint sensor (step 2.4), such as for example starting an internet browser, creating a new message, accessing the calendar, placing a call to a given contact and unlocking the terminal. If there is no match the process returns to step 2.1.

A specific function can be associated with each of the 10 fingers of the human hands. Table 1 below provides an example of association between fingers of the right hand (RH) and the left hand (LH) and functions to be performed according to the invention.

Table 1

Finger	Function to be performed
RH thumb	New message
RH index finger	Access to calendar
RH middle finger	Unlock the terminal
RH ring finger	Initiate phone call to contact 1
RH little finger	Initiate phone call to contact 2
LH thumb	Open Web browser
LH index finger	Unlock the terminal
LH middle finger	Initiate phone call to contact 3
LH ring finger	Initiate phone call to contact 4
LH little finger	Initiate phone call to contact 5

The terminal is provided with a keylock that prevents actions of the terminal in response to inadverted key activations, for example when the terminal is in a bag or pocket. When the keylock is active, the processor ignores

any key activations, except those to deactivate the keylock (if any), in some circumstances particular keys can be enabled to bypass the keylock, such as the call handling keys upon an incoming call. The functions activated with the fingerprint sensor are performed also when the keylock is active, i.e. the user only has to place the correct finger on the fingerprint sensor to have the terminal (processor 18) perform the function associated with the fingerprint concerned. According to a variation of this embodiment the terminal is not provided with a keylock.

According to another variation of the first and second embodiments one or more further fingerprint sensors (not shown) are provided to increase the number of functions that can be accessed quickly.

Fig 3. shows a second embodiment of the invention in the form of a laptop computer. The laptop computer 100 comprises a user interface having a housing 102, a display 103, and an on/off button 104. The laptop computer 100 according to the first preferred embodiment is adapted for operation with Windows® operating system, but could just as well be operated with any other suitable operating system such as Mac OS X ® or Linux®. The laptop computer 100 may be connected to a TCP/IP-based network, although this is not necessary for the invention.

The keyboard 107 is of the "QWERTY" or similar type and has alphabetic keys and numeric keys, by means of which the user can enter text and numbers.

The laptop computer 100 has additionally a touchpad 109, a leftclick button 110 and a rightclick button 111. The touchpad 109 serves to control the position of a cursor of the graphical user interface on the display 103. The leftclick and rightclick keys 110 and 111 serve to select and activate functions associated with icons shown on the display 103. These functions can be simple functions that are performed as a part of an application, such as marking a text, the changing of a setting, but they can also be the start of applets or applications.

A fingerprint sensor 121 is placed at an easily accessible position on the housing 102. In the present embodiment the fingerprint sensor 121 is shown to be placed on the front surface of the laptop computer 100. However, the fingerprint sensor 121 could be placed on other surfaces of the computer, such as the sides, top, bottom or back.

A releasable rear cover (not shown) gives access to the battery pack (not shown) in the back of the computer that supplies electrical power for the electronic components of the laptop computer 100.

The laptop computer 100 has a pivotable flat display 103 that is typically made of an LCD with back lighting, such as a TFT matrix capable of displaying color images.

Fig. 4 illustrates in block diagram form the general architecture of a laptop computer 100 constructed in accordance with the present invention. A processor 118 controls the operation of the computer. The processor 118 also forms the interface to the peripheral units of the apparatus, including a RAM memory and ROM memory 116, the

hard disk 117, the graphical display 103, the fingerprint sensor 121, touchpad 109 and keyboard 107 (as well as data, power supply, etc.).

The signal from the fingerprint sensor 121 is processed with a fingerprint algorithm that is either included in the hardware of the sensor 121 or in the software running on the processor 118. Similar fingerprint identification algorithms as described above for the first embodiment can be used for the second embodiment and since the exact nature of the usable fingerprint identification algorithm is not essential for the present invention, these algorithms are not described in detail here.

The fingerprint data of at least two of the fingers of an authorized user (such as for example the owner of the terminal) have been stored in the terminal 100, for example on the hard disk 117. The stored fingerprint data can have been generated with the fingerprint sensor 121 on the terminal 100 itself, or be transmitted/downloaded to the terminal from another source.

A function to be performed is associated with each of the at least two fingerprints of the user. The association of functions to the various fingerprints is in this preferred embodiment carried out via the graphical user interface, but the functions may alternatively be pre-programmed. A group of functions to choose from may be preselected. The functions to be performed can be simple functions, applets, or applications.

The fingerprint sensor 121 scans the fingerprint of any finger that is placed thereon. The processor 118 monitors the output from the fingerprint sensor 121 and compares

it with the stored fingerprint data using the fingerprint algorithm. When there is a match the processor 118 performs the function associated with the fingerprint that has been scanned by the fingerprint sensor 121, such as for example starting an internet browser, creating a new e-mail message, accessing the calendar, opening a file or unlocking the computer 100.

A specific function can be associated with each of the 10 fingers of the human hands. Table 2 below provides an example of association between fingers of the right hand (RH) and the left hand (LH) and functions to be performed according to the invention.

Table 2

Finger	Function to be performed
RH thumb	New e-mail
RH index finger	Access to calendar
RH middle finger	Unlock the computer
RH ring finger	Start wordprocessor
RH little finger	Start softphone
LH thumb	Open Web browser
LH index finger	Unlock the computer
LH middle finger	Initiate phone call to contact 1 with the softphone
LH ring finger	Start photo viewer
LH little finger	Lock the computer

The computer 100 is provided with a safety lock that prevents actions of the computer in response to inadverted or unauthorized key activations. When the safety lock is active, the processor only allows the entry of a password and does not allow any other user

interaction with the computer. The functions activated with the fingerprint sensor are performed also while the computer is locked, i.e. the user only has to place the correct finger on the fingerprint sensor 121 to have the computer (processor 118) perform the function associated with the fingerprint concerned.

Fig. 5 shows a third embodiment of the invention, which is a mobile communication terminal 1 that is substantially identical to the mobile communication terminal according the first embodiment of the invention. However, the fingerprint sensor 21 is integrated in the offhook key 11.

In this embodiment the main use of the fingerprint sensor 21 is to answer an incoming call and/or to initiate an outgoing call. Only the fingerprint data of one finger per authorized user need to be stored in the terminal 1 according to this embodiment. The processor 18 monitors the signal from the fingerprint sensor 21 and compares it with the stored fingerprint data. When the processor 18 detects an incoming call and a fingerprint match simultaneously, the incoming call is answered. When the processor 18 detects that a telephone number has been entered, selected or otherwise identified and a fingerprint match occurs simultaneously an outgoing call to the identified phone number is placed.

The keylock function of the terminal can be active when a call is answered or initiated using the fingerprint sensor 21. Thus, the risk of a call inadvertedly being answered or initiated is significantly reduced when the keylock function is active and the only way to answer or initiate a call is by a fingerprint match.

According to a variation of the third embodiment a second fingerprint sensor (not shown) is integrated in the onhook key 12, to avoid unintended rejections of incoming calls.

According to a further embodiment of the invention (not shown) the system with the multiple fingertip and function association is used in an ATM (automated teller machine) cash dispenser or other terminal to gain access to banking related functions, e.g. a terminal that is connected to a secure network. A plurality of fingerprints of at least two different fingers of an authorized user are stored in a computer system coupled to the ATM. The user interface of the ATM is provided with a fingerprint sensor and a processor in the computer system coupled to the ATM is configured to perform the specific function associated with the finger concerned when a fingerprint has been recognized and authenticated.

The embodiments described above can be combined with one another in arbitrary combinations.

The term "comprising" as used in the claims does not exclude other elements or steps. The term "a" or "an" as used in the claims does not exclude a plurality. The single processor or other unit may fulfill the functions of several means recited in the claims.

Although the present invention has been described in detail for purpose of illustration, it is understood that such detail is solely for that purpose, and variations can be made therein by those skilled in the art without departing from the scope of the invention.

CLAIMS:

1. A device comprising:

a processor controlling the operation of the device, said processor is configured to perform a multitude of functions,

a fingerprint sensor for scanning a fingerprint of a user,

a memory in which the fingerprints of at least two different fingers of one and the same user are stored,

a specific function to be performed being associated with each of said at least two fingerprints, and

said processor being configured to perform the function associated with a fingerprint when the fingerprint scanned by the fingerprint sensor matches one of the stored fingerprints.

2. A device according to claim 1 wherein said specific function is to start an application or an applet on the device.

3. A device according to claim 1 or 2, further comprising a keypad or keyboard, wherein said device has at least one mode of operation in which a security lock or keylock is active and wherein said processor is configured to perform the command associated with a given fingerprint when said fingerprint sensor scans said given fingerprint also when the device is in a mode in which the security lock or keylock is active.

4. A device according to any of claims 1 to 3, comprising one or more further fingerprint sensors, wherein a

specific function to be performed is associated with each of said at least two fingerprints and said further fingerprint sensor.

5. A device according to any of claims 1 to 4, in which fingerprint data of one or more authorized users are stored.

6. A device according to any of claims 1 to 5 that is coupled to a secure network.

7. An automated teller machine, comprising a device according to any of claims 1 to 6.

8. A method for operating a device with a user interface that includes a fingerprint sensor, comprising:

associating a specific function to be performed with each of at least two fingers of a user, and

performing the specific function associated with a fingerprint when the fingerprint sensor scans a fingerprint matching one of said at least two fingers.

9. A method according to claim 8, wherein said device is controlled by a processor operating in response to user input via a keyboard, further comprising the step of performing the specific function associated with a fingerprint when the fingerprint sensor scans a fingerprint matching one of said at least two fingers when a security lock or keypad lock is active.

10. A method according to claim 8 or 9, further comprising the step of storing fingerprint data of one or more authorized users of the device.

11. A method according to any of claims 8 to 10, wherein said step of performing a function includes performing an application or an applet.

12. A mobile communication terminal comprising:

a processor controlling the operation of the terminal,
a fingerprint sensor for scanning a fingerprint of a user of the terminal,
said processor being configured to answer an incoming call when a fingerprint scanned by the fingerprint sensor matches a stored fingerprint during an incoming call, and/or
said processor being configured to initiate an outgoing call when a fingerprint scanned by the fingerprint sensor matches a stored fingerprint and a telephone number has been keyed in, selected or identified.

13. A mobile communication terminal according to claim 12, wherein said fingerprint sensor is integrated in a combined onhook/offhook key, in a separate onhook key and/or in a separate offhook key.

14. A mobile communication terminal according to claim 12, wherein said fingerprint sensor is integrated in a multifunctional softkey.

15. A mobile communication terminal according to any of claims 12 to 14, wherein said mobile communication terminal has at least one mode of operation or state in which a keylock is applied and wherein said processor is configured to answer an incoming call when a fingerprint scanned by the fingerprint sensor matches a stored fingerprint during an incoming call, also when the device is in a mode in which the keypad lock is active, and/or wherein said processor is configured to initiate an outgoing call when a fingerprint scanned by the fingerprint sensor matches a stored fingerprint when a telephone number has been keyed in, selected or identified, also when the device is in a mode in which the keypad lock is active.

16. A mobile communication terminal according to any of claims 12 to 15, wherein fingerprint data of one or more authorized users are stored.

17. A method for operating a mobile communication terminal device with a user interface that includes a fingerprint sensor, comprising:

answering an incoming call when a fingerprint scanned by the fingerprint sensor matches a stored fingerprint during an incoming call, and/or
initiating an outgoing call when a fingerprint scanned by the fingerprint sensor matches a stored fingerprint and a telephone number has been keyed in, selected or identified.

18. A method according to claim 17, wherein said fingerprint sensor is integrated in a combined

onhook/offhook key, in a separate onhook key, in a separate off hook key and/or in a multifunctional softkey

19. A method according to claim 17 or 18, wherein said device is controlled by a processor operating in response to user input via a keyboard, further comprising the step of performing the specific function associated with a fingerprint when the fingerprint sensor scans a fingerprint matching one of said at least two fingers when a security lock or keypad lock is active.

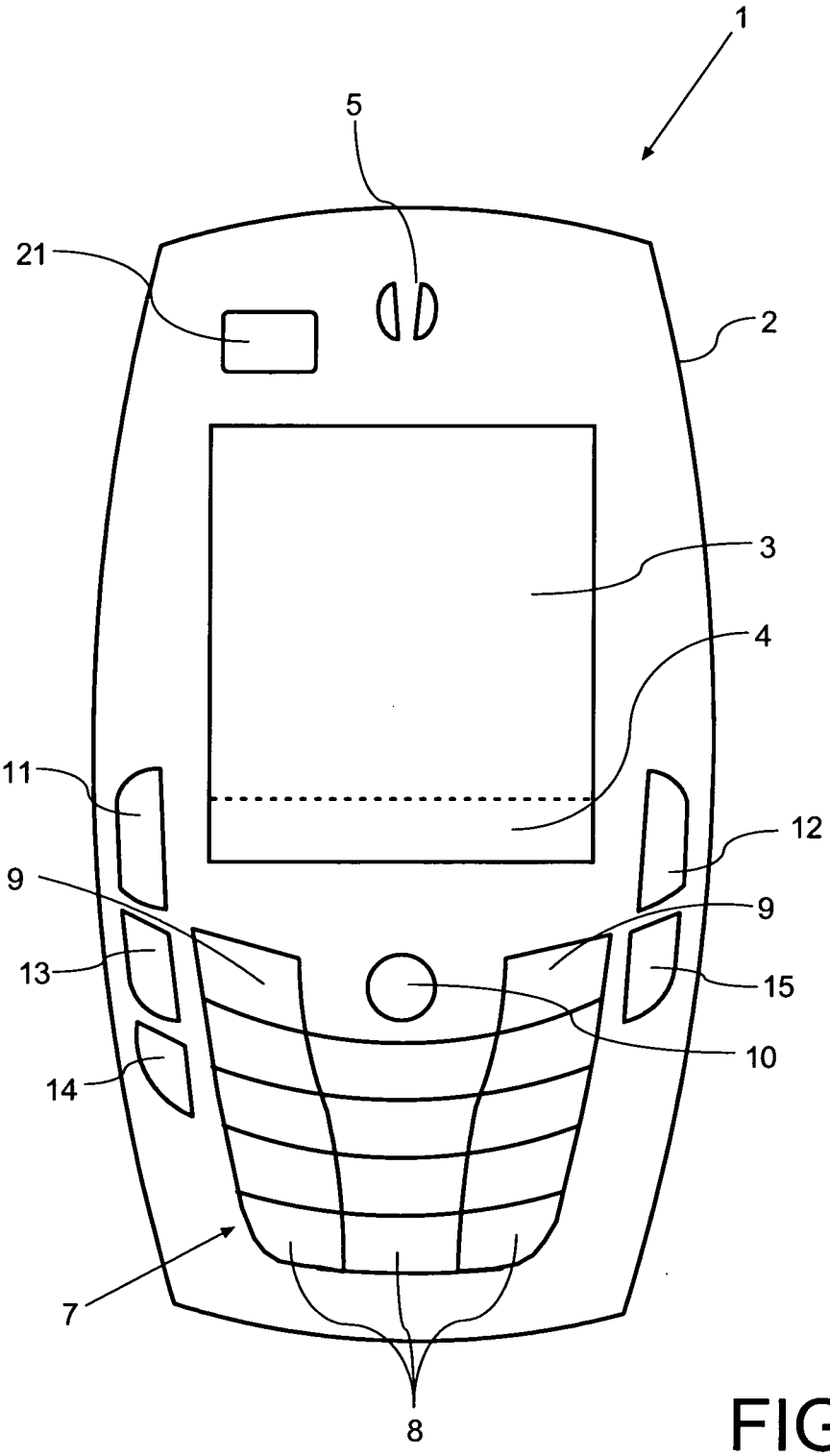

FIG. 1

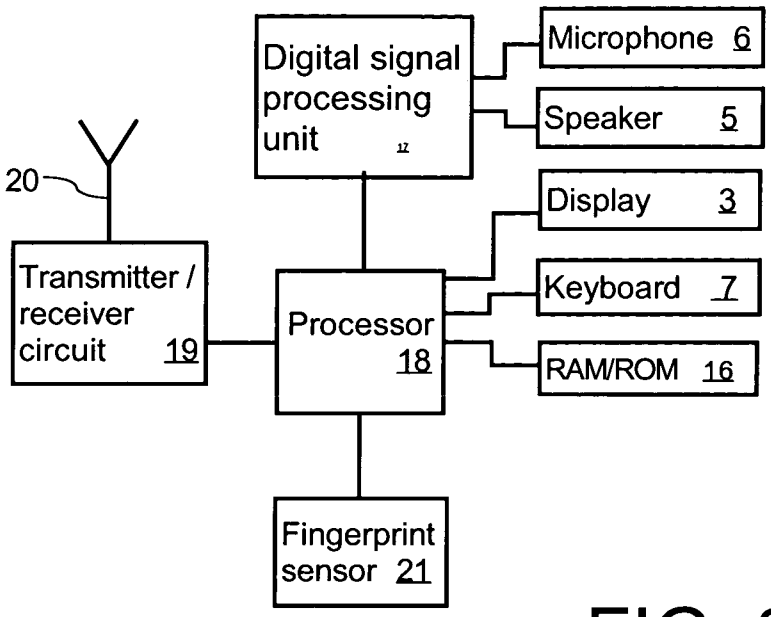
Digital signal processing unit
Microphone 6
Speaker 5
Display 3
Keyboard 7
RAM/ROM 16
20
Transmitter / receiver circuit 19
Processor 18
Fingerprint sensor 21

FIG. 2

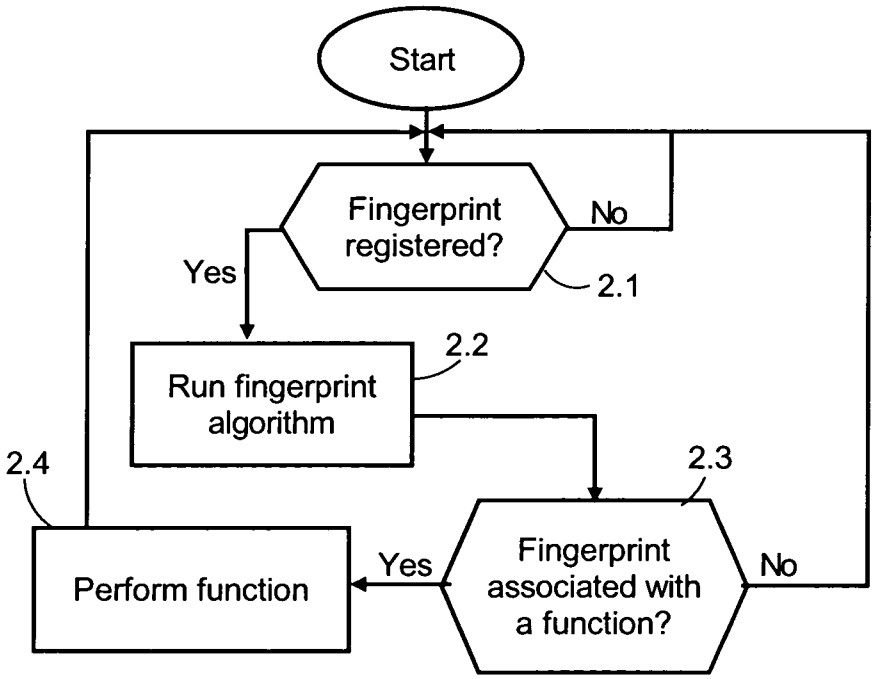
Start
Fingerprint registered?
No
Yes
2.1
2.2
Run fingerprint algorithm
2.4
2.3
Perform function
Yes
Fingerprint associated with a function?
No

FIG. 2A

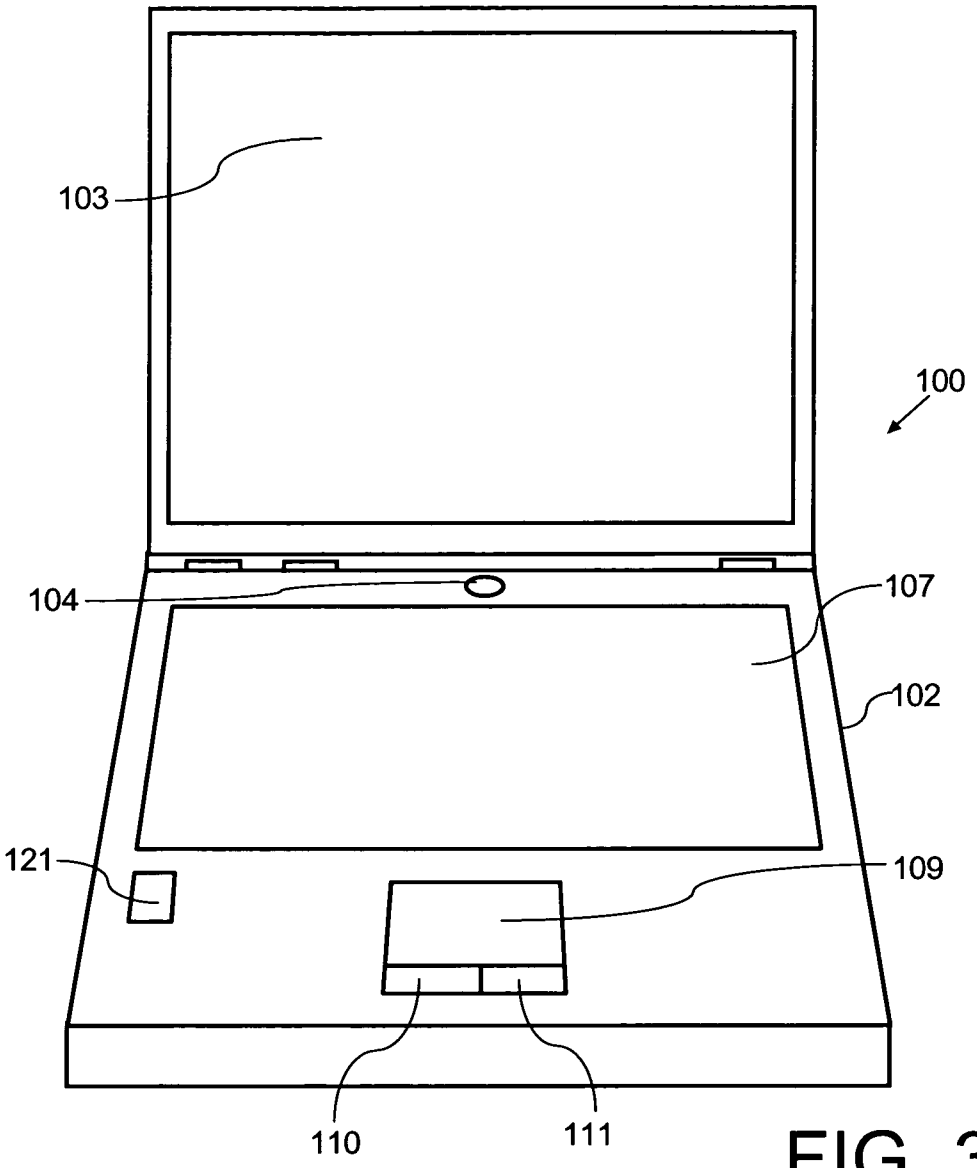
103
100
104
107
102
121
109
110
111

FIG. 3

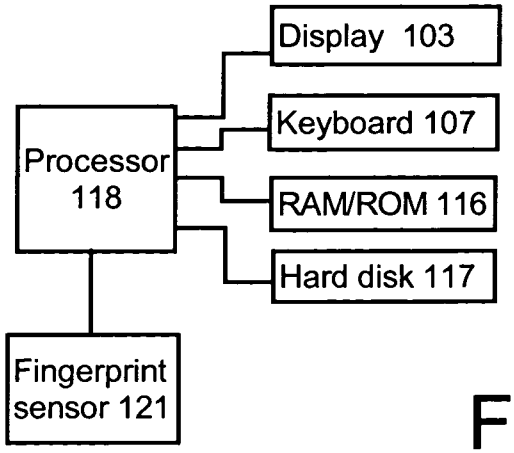
Display 103
Keyboard 107
Processor 118
RAM/ROM 116
Hard disk 117
Fingerprint sensor 121

FIG. 4

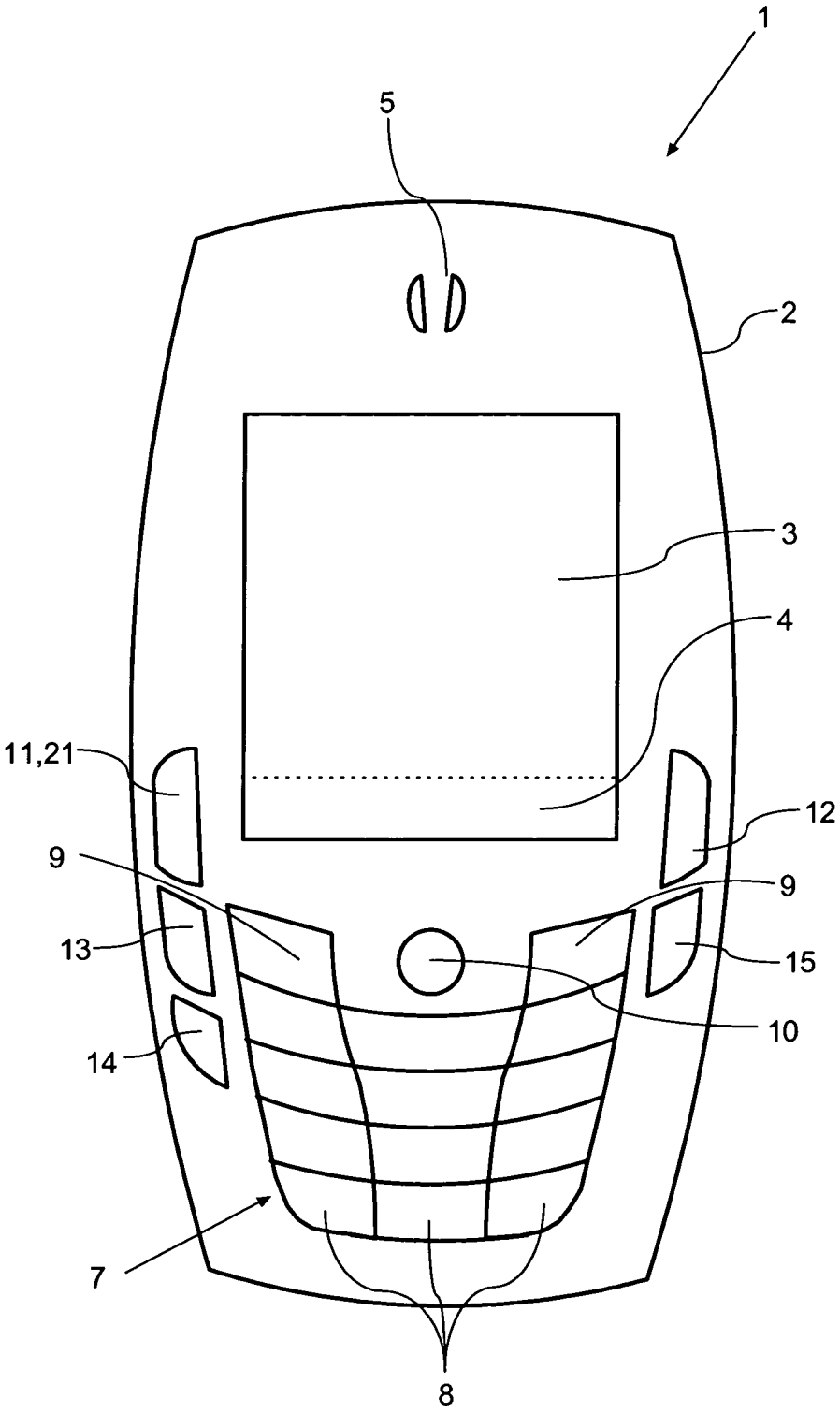

FIG. 5

INTERNATIONAL SEARCH REPORT

International application No
PCT/EP2006/005525

A. CLASSIFICATION OF SUBJECT MATTER
INV. H04M1/725

According to International Patent Classification (IPC) or to both national classification and IPC

B. FIELDS SEARCHED

Minimum documentation searched (classification system followed by classification symbols)
H04M G06F G07C G06K

Documentation searched other than minimum documentation to the extent that such documents are included in the fields searched

Electronic data base consulted during the international search (name of data base and, where practical, search terms used)
EPO-Internal

C. DOCUMENTS CONSIDERED TO BE RELEVANT

Category*	Citation of document, with indication, where appropriate, of the relevant passages	Relevant to claim No.
X	JP 2005 268951 A (NIPPON ELECTRIC CO) 29 September 2005 (2005-09-29) abstract	1-11
X	EP 0 969 644 A (NOKIA MOBILE PHONES LTD [FI]) 5 January 2000 (2000-01-05) abstract paragraph [0001] - paragraph [0012] paragraph [0018] - paragraph [0025] paragraph [0028] - paragraph [0033]	1-19

-/--

[X] Further documents are listed in the continuation of Box C.

[X] See patent family annex.

* Special categories of cited documents :

"A" document defining the general state of the art which is not considered to be of particular relevance

"E" earlier document but published on or after the international filing date

"L" document which may throw doubts on priority claim(s) or which is cited to establish the publication date of another citation or other special reason (as specified)

"O" document referring to an oral disclosure, use, exhibition or other means

"P" document published prior to the international filing date but later than the priority date claimed

"T" later document published after the international filing date or priority date and not in conflict with the application but cited to understand the principle or theory underlying the invention

"X" document of particular relevance; the claimed invention cannot be considered novel or cannot be considered to involve an inventive step when the document is taken alone

"Y" document of particular relevance; the claimed invention cannot be considered to involve an inventive step when the document is combined with one or more other such documents, such combination being obvious to a person skilled in the art.

"&" document member of the same patent family

Date of the actual completion of the international search	Date of mailing of the international search report
4 April 2007	19/04/2007

Name and mailing address of the ISA/	Authorized officer
European Patent Office, P.B. 5818 Patentlaan 2 NL – 2280 HV Rijswijk Tel. (+31–70) 340–2040, Tx. 31 651 epo nl, Fax: (+31–70) 340–3016	Kim-Mayser, Michael

2

Form PCT/ISA/210 (second sheet) (April 2005)

INTERNATIONAL SEARCH REPORT

International application No
PCT/EP2006/005525

C(Continuation). DOCUMENTS CONSIDERED TO BE RELEVANT

Category*	Citation of document, with indication, where appropriate, of the relevant passages	Relevant to claim No.
X	DE 198 37 642 C1 (SIEMENS AG [DE]) 25 November 1999 (1999-11-25) abstract column 1, line 3 - line 8 column 2, line 28 - line 40 column 2, line 59 - column 3, line 22 column 3, line 49 - line 51 column 4, line 29 - column 5, line 29 column 5, line 56 - column 6, line 24	1-11
X	US 2005/226469 A1 (HO JONG-HWAN [KR]) 13 October 2005 (2005-10-13)	1-11
A	abstract figures 2-5E paragraph [0015] - paragraph [0018] paragraph [0034] - paragraph [0064]	12-19
X	DE 197 10 546 A1 (GRUNDIG AG [DE]) 17 September 1998 (1998-09-17) abstract column 1, line 20 - line 26 column 1, line 43 - line 50 column 2, line 8 - line 21 column 2, line 65 - column 3, line 43	12-19
A	JP 2001 067523 A (HITACHI LTD) 16 March 2001 (2001-03-16) abstract	1-11
A	DE 10 2004 051347 A1 (PANTECH CO [KR]) 2 June 2005 (2005-06-02) the whole document	1-19

2

INTERNATIONAL SEARCH REPORT

International application No.
PCT/EP2006/005525

Box II Observations where certain claims were found unsearchable (Continuation of item 2 of first sheet)

This International Search Report has not been established in respect of certain claims under Article 17(2)(a) for the following reasons:

1. [ ] Claims Nos.:
because they relate to subject matter not required to be searched by this Authority, namely:

2. [ ] Claims Nos.:
because they relate to parts of the International Application that do not comply with the prescribed requirements to such an extent that no meaningful International Search can be carried out, specifically:

3. [ ] Claims Nos.:
because they are dependent claims and are not drafted in accordance with the second and third sentences of Rule 6.4(a).

Box III Observations where unity of invention is lacking (Continuation of item 3 of first sheet)

This International Searching Authority found multiple inventions in this international application, as follows:

see additional sheet

1. [X] As all required additional search fees were timely paid by the applicant, this International Search Report covers all searchable claims.

2. [ ] As all searchable claims could be searched without effort justifying an additional fee, this Authority did not invite payment of any additional fee.

3. [ ] As only some of the required additional search fees were timely paid by the applicant, this International Search Report covers only those claims for which fees were paid, specifically claims Nos.:

4. [ ] No required additional search fees were timely paid by the applicant. Consequently, this International Search Report is restricted to the invention first mentioned in the claims; it is covered by claims Nos.:

Remark on Protest

[ ] The additional search fees were accompanied by the applicant's protest.

[X] No protest accompanied the payment of additional search fees.

FURTHER INFORMATION CONTINUED FROM PCT/ISA/ 210

This International Searching Authority found multiple (groups of) inventions in this international application, as follows:

1. claims: 1-11

Method and device comprising a processor controlling the operation of the device, said processor being configured to perform a multitude of functions, a fingerprint sensor for scanning a fingerprint of a user, a memory in which the fingerprints of at least two different fingers of one and the same user are stored, a specific function to be performed being associated with each of said at least two fingerprints, and said processor being configured to perform the function associated with a fingerprint when the fingerprint scanned by the fingerprint sensor matches one of the stored fingerprints.

---

2. claims: 12-19

Method and mobile communication terminal comprising a processor controlling the operation of the terminal, a fingerprint sensor for scanning a fingerprint of a user of the terminal, said processor being configured to answer an incoming call when a fingerprint scanned by the fingerprint sensor matches a stored fingerprint during an incoming call, and/or said processor being configured to initiate an outgoing call when a fingerprint scanned by the fingerprint sensor matches a stored fingerprint and a telephone number has been keyed in, selected or identified.

INTERNATIONAL SEARCH REPORT

Information on patent family members

International application No
PCT/EP2006/005525

Patent document cited in search report	Publication date	Patent family member(s)	Publication date
JP 2005268951 A	29-09-2005	NONE	
EP 0969644 A	05-01-2000	US 6792287 B1	14-09-2004
DE 19837642 C1	25-11-1999	WO 0011617 A1	02-03-2000
US 2005226469 A1	13-10-2005	KR 20050098499 A	12-10-2005
DE 19710546 A1	17-09-1998	EP 0871148 A2	14-10-1998
JP 2001067523 A	16-03-2001	NONE	
DE 102004051347 A1	02-06-2005	CN 1609772 A	27-04-2005
		US 2005085217 A1	21-04-2005