F. A. BRESSMER & J. SHELHAMMER.

DRAFT EVENER.

APPLICATION FILED JAN. 26, 1911.

**1,040,871.** Patented Oct. 8, 1912.

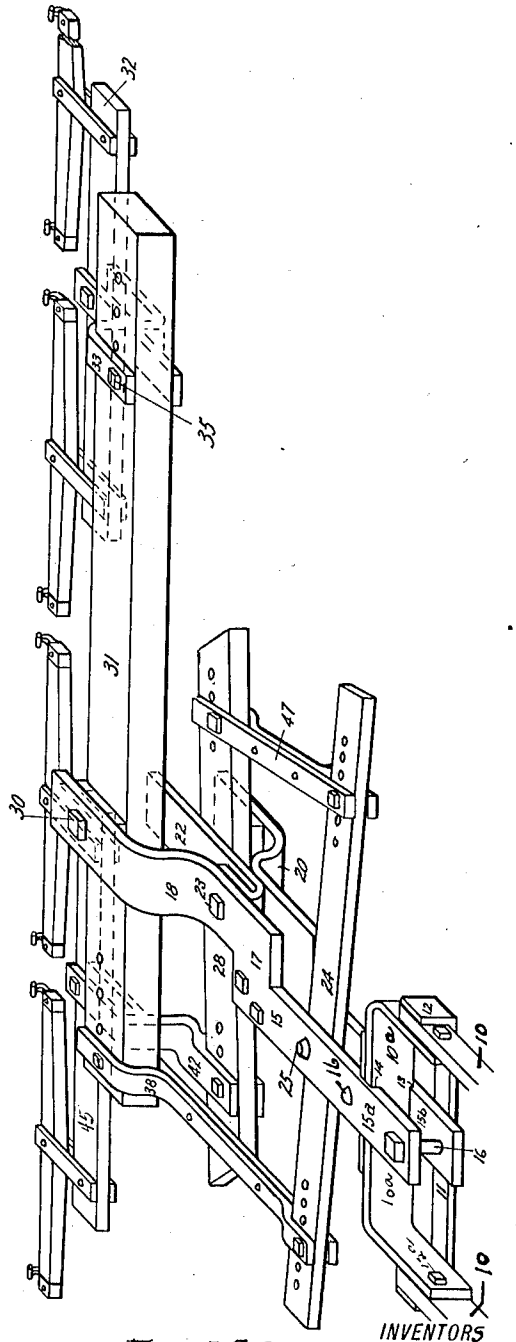


WITNESSES:

K. Waddell

Edith F. Cope.

INVENTORS

Fred A. Bressmer

James Shelhammer

BY

John L. Waddell

ATTORNEY

COLUMBIA PLANOGRAPH CO., WASHINGTON, D. C.

# UNITED STATES PATENT OFFICE.

FRED A. BRESSMER AND JAMES SHELHAMMER, OF MACON COUNTY, ILLINOIS.

## DRAFT-EVENER.

1,040,871. Specification of Letters Patent. Patented Oct. 8, 1912.

Application filed January 26, 1911. Serial No. 604,897.

*To all whom it may concern:*

Be it known that we, FRED A. BRESSMER and JAMES SHELHAMMER, citizens of the United States, and residents of Macon county and State of Illinois, have invented new and useful Improvements in Draft-Eveners; and our preferred manner of carrying out the invention is set forth in the following full, clear, and exact description, terminating with claims particularly specifying the novelty.

This invention relates to an improvement in draft eveners and more particularly to devices of this character which are primarily intended for use in connection with plows or other agricultural implements and the object of the invention is the provision of a simple and efficient device of this character which will effectually eliminate all side draft.

Other objects of the invention will be apparent from the detail description herein when read in connection with the accompanying drawings wherein a convenient embodiment of the invention is shown and wherein like numerals of reference refer to similar parts in the several views.

In the drawings, the figure is a perspective view of a draft evener constructed in accordance with the present invention.

Referring now more particularly to the drawings, 10 designates the outer ends of the arms of the beam of a plow or other agricultural implement. Pivotally secured between the arms 10 by means of suitable bolts is a U-shaped member $10^a$, which normally rests upon a bench 11 which connects the arms 10 and underlies the lower edges thereof. The front portion of the U-shaped member $10^a$ is provided with notches 13 and 14 in the upper and lower edges thereof.

15 designates a clevis which extends forwardly from the end of the beam and is formed of two superposed metallic plates $15^a$ and $15^b$ the rear ends of which fit within the notches 13 and 14 formed in the upper and lower edges of the U-shaped member $10^a$. The plates $15^a$ and $15^b$ of the clevis are rigidly clamped to the U-shaped member $10^a$ by means of clamping bolts 16 which pass through said plates and are positioned on opposite sides of their connection with said U-shaped member. The plates $15^a$ and $15^b$ of the clevis are provided intermediate the ends thereof with laterally offset portions 17 so as to throw the outer portions thereof at one side of the center of the plow beam. The forward end of the plate $15^a$ of the clevis is positioned in a plane above the plane of the main portion of said plate, the plate being bent at 18 to accomplish this result, while the outer end of the plate $15^b$ of the clevis is positioned in a plane below the plane of the main portion of said plate, said plate being bent downwardly at 20 to accomplish this result. Rigidly clamped between the plates $15^a$ and $15^b$ of the clevis adjacent the bent portions 18 and 20 thereof by means of a suitable clamping bolt 23, is a plate 22, the forward end of which terminates in substantially the same plane as the outer ends of the arms $15^a$ and $15^b$ of the clevis. Pivotally supported between the plate 22 and the upper plate $15^a$ of the clevis is a beam 31, the pivot of said beam being positioned at one side of the center thereof so that the greater portion of the beam will be positioned on the right hand side of the clevis.

Pivotally supported between the plate 22 and the lower plate $15^b$ of the clevis is a beam 28, the pivot of said beam being at one side of the center thereof, and the beam being secured with the greater portion of its length at the left of the clevis 15. The beams 31 and 28 may be pivotally secured in position in any suitable manner, a single pivot bolt 30 being conveniently employed for this purpose which passes through the outer end portions of the upper and lower plates $15^a$ and $15^b$ of the clevis and also through the interposed plate 22. A double tree 32 is pivotally connected to a clip 33 which is adapted to be secured to the outer portion of the long arm of the beam 31. Means are preferably provided for adjusting the clip 33 longitudinally of the beam 31 and to this end the beam is provided with a plurality of openings in the outer end thereof and the clip is secured to the beam by means of a fastening bolt 35 which may be passed through any one of said openings.

Pivotally connected to the short end of the beam 31 is a link 38 the rear end of which is pivotally connected to one end of a beam 24 which is positioned between the inner ends of the plates $15^a$ and $15^b$ of the clevis and is pivotally connected thereto by means of a suitable pivot bolt 25. The pivot

bolt 25 passes through the beam 24 at one side of the center thereof and the greater portion of said beam is positioned at the right of the clevis 15. The corresponding ends of the beams 31 and 24 are preferably provided with a plurality of openings therein through which the pivot bolts which connect the ends of the link 38 to such beams, pass so that the points of connection of the link with the beams can be adjusted. The outer portion of the beam 24 which is positioned at the right of the clevis 15 is pivotally connected to one end of a link 47, the other end of which is pivotally connected to the portion of the beam 28 which is positioned at the right of the clevis 15. The ends of the beams 24 and 28 which are connected by the link 47 are provided with a plurality of openings therein through which the pivot bolts of the links pass, so that such bolts can be secured in any of such holes to vary the points of connection of the link with said beams.

Pivotally connected to the portion of the beam 28 at the left of the clevis 15 is one arm of a Z-shaped clevis 42 the upper arm of said clevis projecting forwardly beyond the beam 31, heretofore referred to and having pivotally connected thereto a double tree 45. The lower arm of the clevis 42 is preferably adjustably connected to the beam 28, such beam being conveniently provided with a plurality of openings therein, in any one of which the pivot bolt of the clevis may be secured.

It is believed that the operation of the device will be obvious from the above description.

While a convenient embodiment of the invention is illustrated in the accompanying drawings, it will be understood that many changes may be made to the form and construction therein shown without departing from the spirit and scope of the invention as defined in the appended claims.

We claim:—

1. A draft evener of the character described, comprising a clevis bar adapted for connection to an implement, a pair of superposed beams pivotally connected at one side of the centers thereof to the forward portion of said clevis bar, the pivotal points of said beams being in alinement and the long arms thereof extending on opposite sides of the clevis bar, a draft connection directly connected to the long arm of each of said pairs of beams and extending forwardly therefrom, a beam pivotally connected intermediate its ends to said clevis bar in rear of said first mentioned pair of beams, and a link directly connecting the short end of each of said first mentioned pair of beams with the adjacent end of said last mentioned beam.

2. In a draft device for implements comprising a longitudinally extending clevis bar, the front end of which is laterally off-set, a pair of beams pivotally connected intermediate their ends to the laterally off-set portion of said clevis bar, a draft device connected to one end of each of said beams, said draft devices being positioned on opposite sides of said clevis bar, a beam pivotally connected intermediate its ends to the rear portion of said clevis bar, and connections between the free ends of said first mentioned pair of beams and the ends of said last mentioned beam.

3. A draft device for implements comprising a longitudinally extending clevis bar, the front end of which is laterally off-set, a pair of beams pivotally connected intermediate their ends to the laterally off-set portion of said clevis bar, a draft device connected to one end of each of said beams, said draft devices being positioned on opposite sides of said clevis bar, a beam fulcrumed to the rear portion of said clevis bar, and a link pivotally connecting the free end of each of said first mentioned beams with the adjacent end of said last mentioned beam.

4. A draft device for implements comprising a longitudinally extending clevis bar adapted for connection to an implement, the front end of which is laterally off-set, a pair of beams pivotally connected at one side of the centers thereof to the off-set clevis bar, a draft device connected to the long arm of each of said beams, a beam pivotally connected intermediate its ends to the inner portion of said clevis bar, and links pivotally connecting the short arm of each of said first mentioned beams with the corresponding end of said last mentioned beams, the pivotal connection of said links with said beams being adjustable longitudinally of the beams.

5. A draft device for implements comprising a longitudinally extending clevis bar, the front end of which is laterally off-set, said clevis bar being formed of a pair of superposed plates, a pair of superposed beams positioned between the plates of the laterally off-set portion of the clevis bar, a pivot bolt passing through said clevis bar and said superposed beams, a draft device connected to one end of each of said beams, said draft devices being positioned on opposite sides of said clevis bar, a beam pivotally secured between the plates of the rear portion of the clevis bar, and links connecting the outer ends of said beam with the corresponding ends of said first mentioned pair of beams.

6. The combination with an implement beam, provided with separated arms, of a U-shaped member pivotally supported between said arms, a stop secured to said arms and underlying said U-shaped member, a clevis bar rigidly secured to said U-shaped member and extending forwardly therefrom, the front portion of said clevis bar being

off-set laterally, a pair of beams pivotally connected to the laterally off-set portion of said clevis bar and extending on opposite sides thereof, a draft device connected to one end of each of said beams, said draft devices being positioned on opposite sides of said clevis bar, a beam pivotally connected to the rear portion of said clevis bar and extending on opposite sides thereof, and connections between the ends of said last mentioned beam and the free ends of the first mentioned pair of beams.

In testimony whereof, we have hereunto subscribed our signatures, this 30th day of Dec., A. D. 1910.

FRED A. BRESSMER.
JAMES SHELHAMMER.

Witnesses:
L. WADDELL,
EDITH F. COPE.

**Copies of this patent may be obtained for five cents each, by addressing the "Commissioner of Patents, Washington, D. C."**