US 20090034475A1

(19) United States

(12) Patent Application Publication

Runyon et al.

(10) Pub. No.: US 2009/0034475 A1

(43) Pub. Date: Feb. 5, 2009

(54) SOFT HANDOFF USING A MULTI-BEAM ANTENNA SYSTEM

(75) Inventors: **Donald L. Runyon**, Duluth, GA (US); **Anthony Guy Hamel**, Encinitas, CA (US); **Timothy J. Martin**, Carlsbad, CA (US)

Correspondence Address:
TOWNSEND AND TOWNSEND AND CREW LLP
VIASAT, INC (CLIENT #017018)
TWO EMBARCADERO CENTER
EIGHTH FLOOR, CA 94111 (US)

(73) Assignee: **ViaSat, Inc.**, Carlsbad, CA (US)

(21) Appl. No.: **12/175,184**

(22) Filed: **Jul. 17, 2008**

Related U.S. Application Data

(60) Provisional application No. 60/961,073, filed on Jul. 17, 2007.

Publication Classification

(51) **Int. Cl.**
H04W 4/00 (2009.01)

(52) **U.S. Cl.** **370/331**; 370/328

(57) **ABSTRACT**

A method for providing soft handoff between antennas in a multi-antenna system is provided according to some embodiments of the disclosure. A first packetized digital data stream may be received from a satellite using a first antenna and the data stream may include a plurality of packets that each include a header and data. The data may be provided, forwarded or stored in memory. In the meantime, a second packetized digital data stream is monitored. The second packetized digital data stream may be received from the satellite using a second antenna. The phase difference between the first packetized digital data stream and the second packetized digital data stream may be determined and added or subtracted from the second packetized digital data stream. The second packetized digital data stream may then be provided, forwarded or stored in memory.

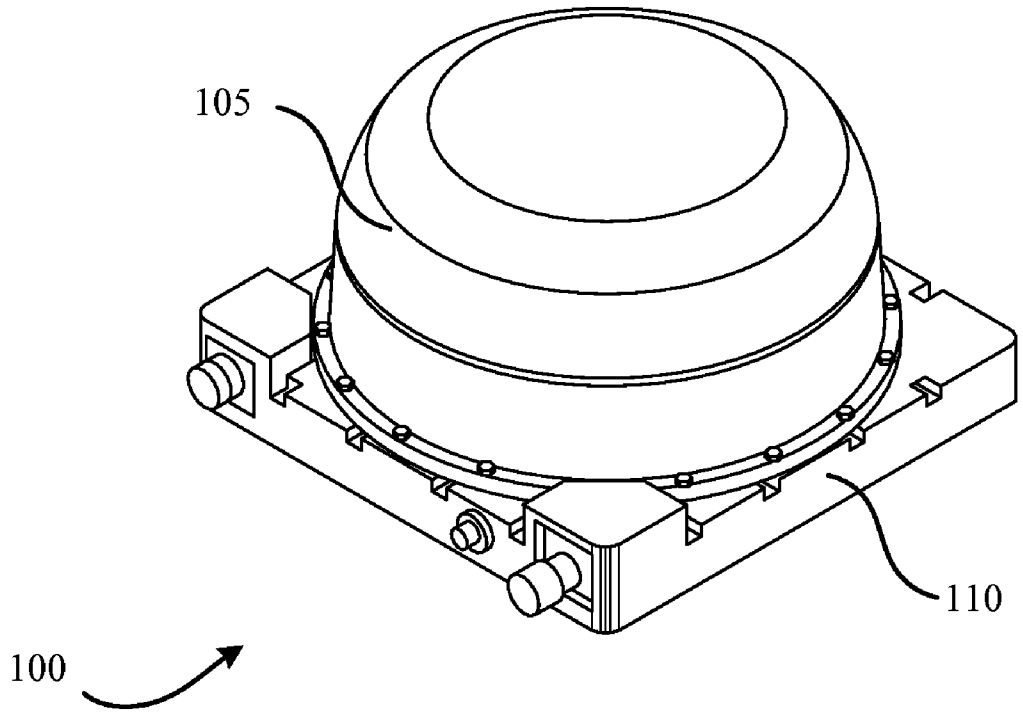

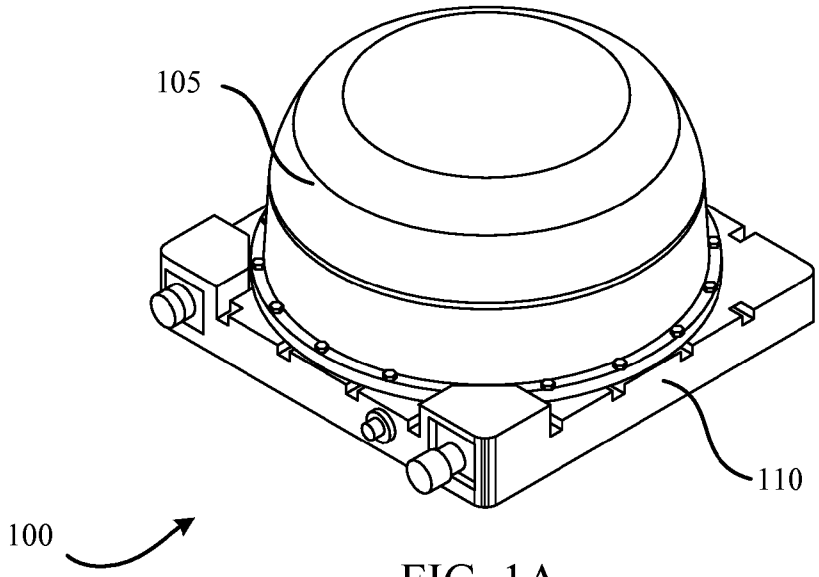

FIG. 1A

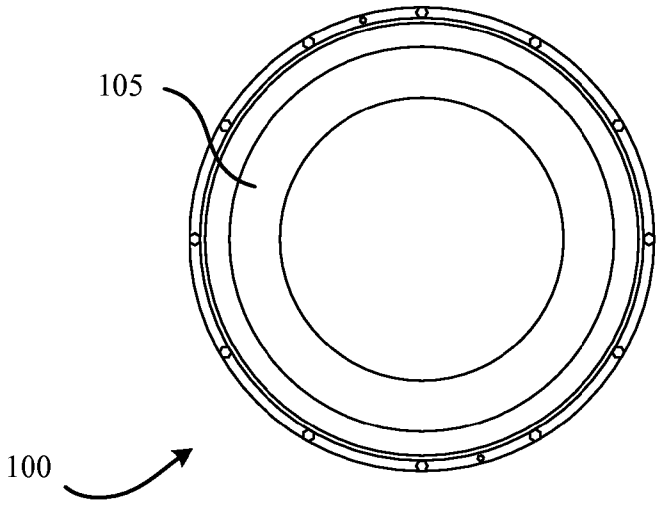

FIG. 1B

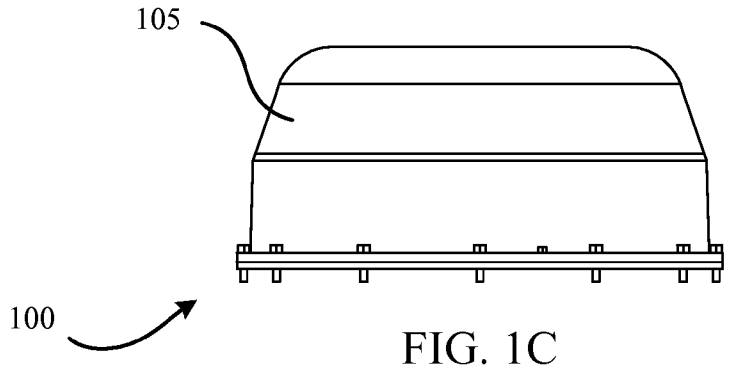

FIG. 1C

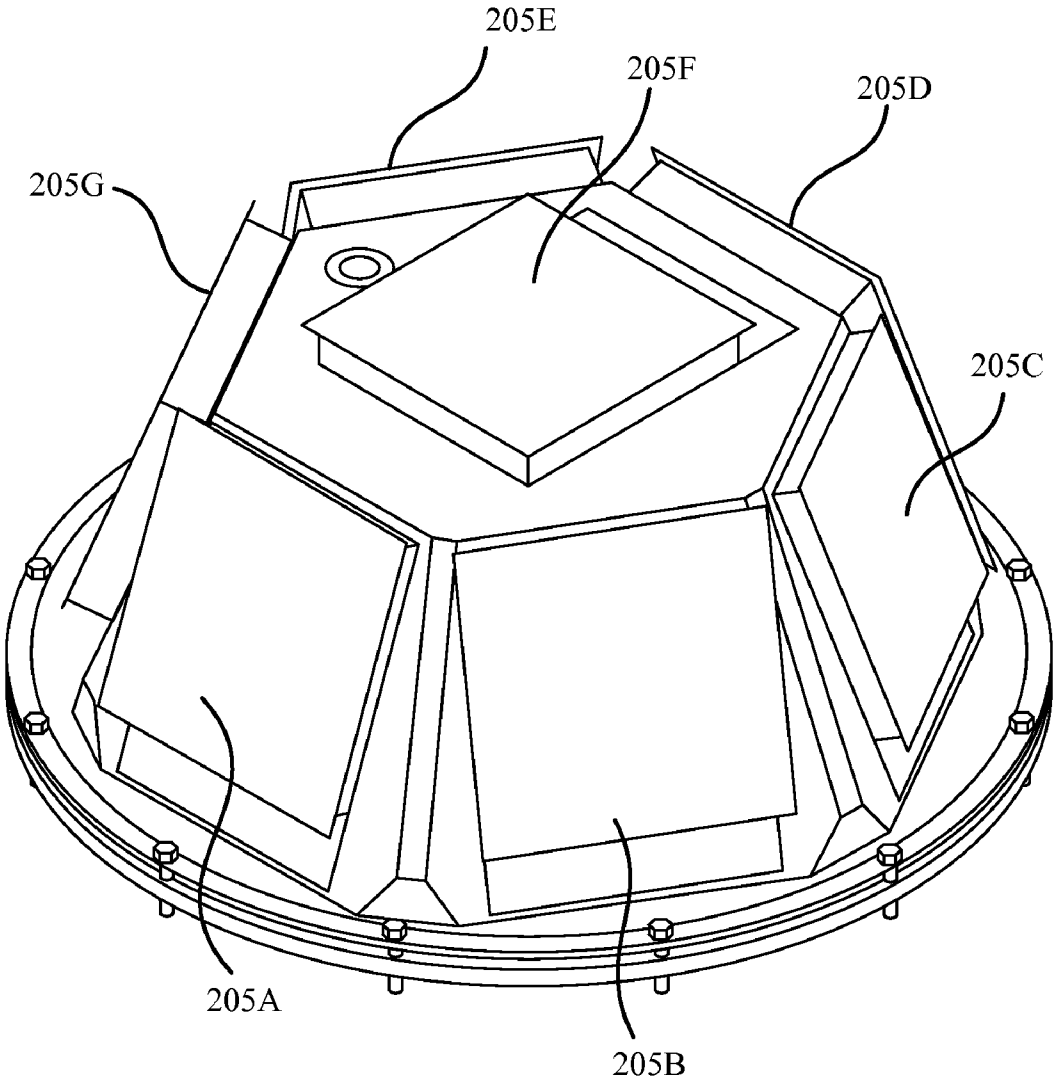

FIG. 2

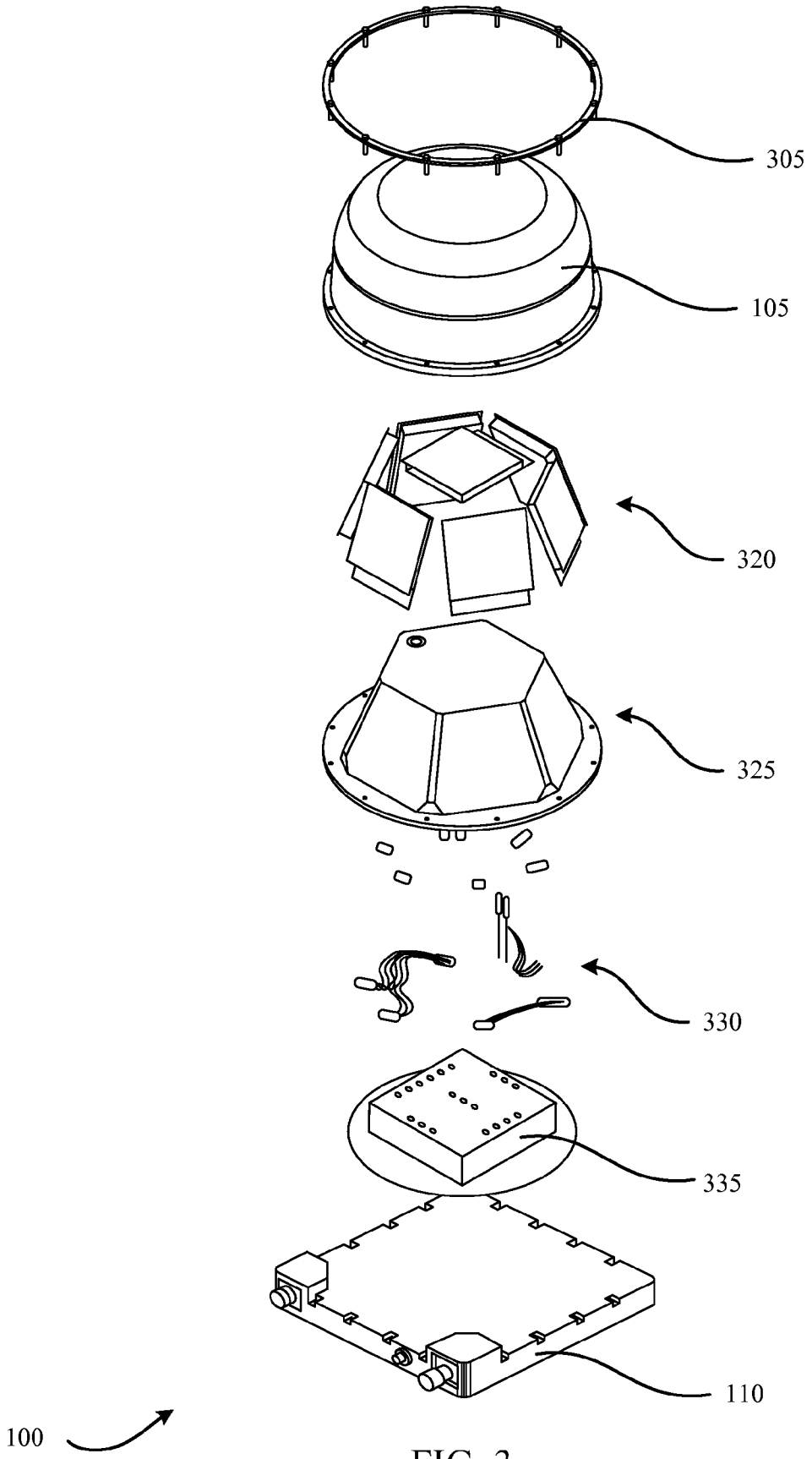

FIG. 3

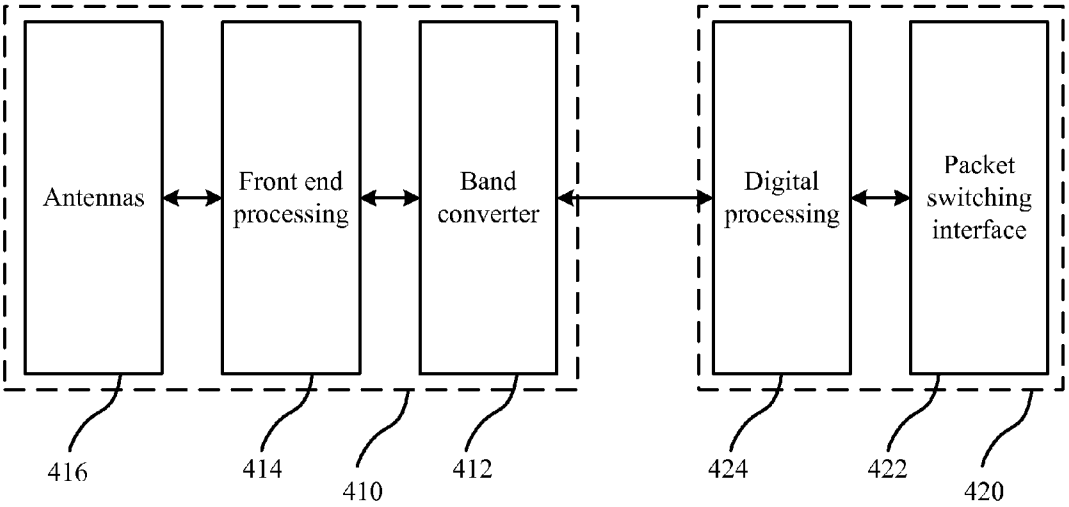
Antennas
Front end processing
Band converter
Digital processing
Packet switching interface
416
414
410
412
424
422
420

FIG. 4

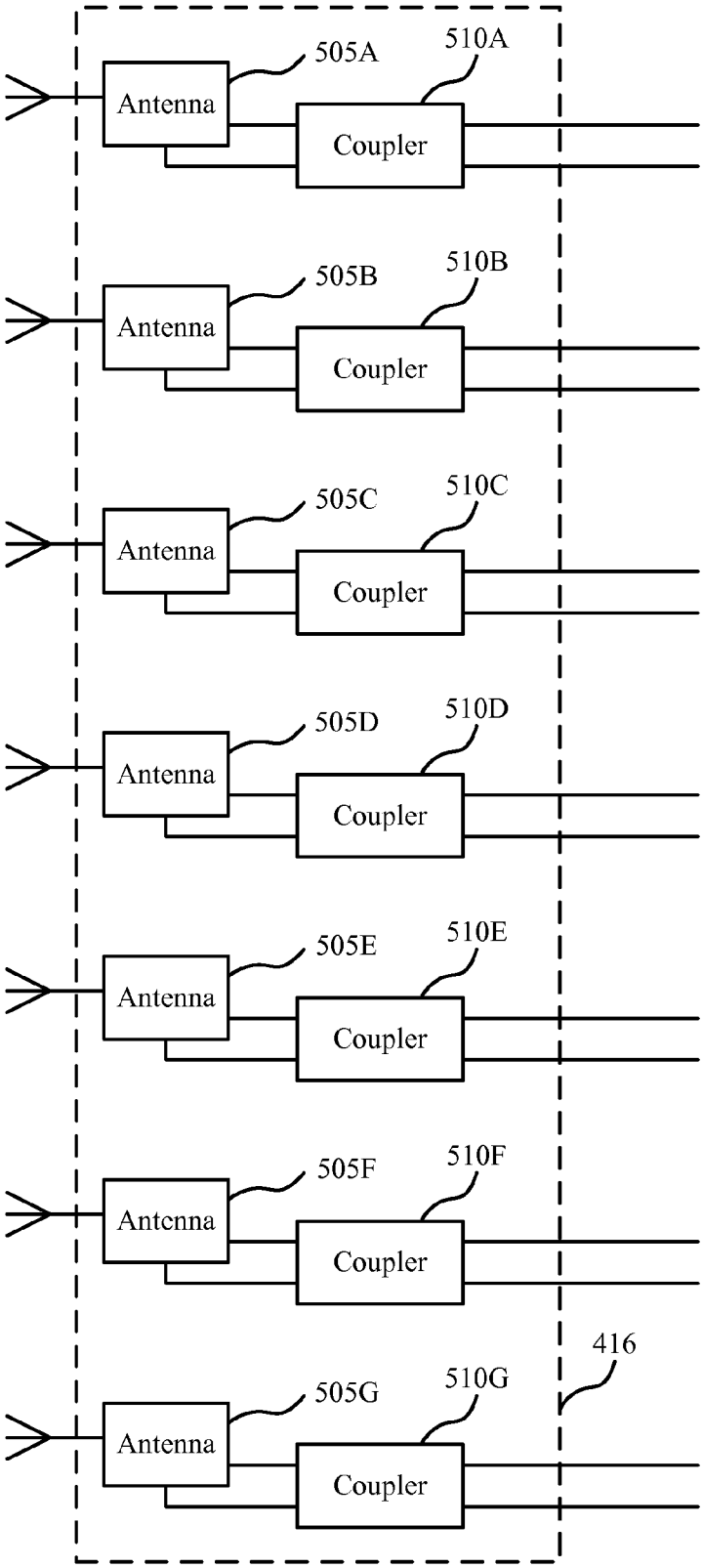
505A
510A
Antenna
Coupler
505B
510B
Antenna
Coupler
505C
510C
Antenna
Coupler
505D
510D
Antenna
Coupler
505E
510E
Antenna
Coupler
505F
510F
Antenna
Coupler
416
505G
510G
Antenna
Coupler

FIG. 5

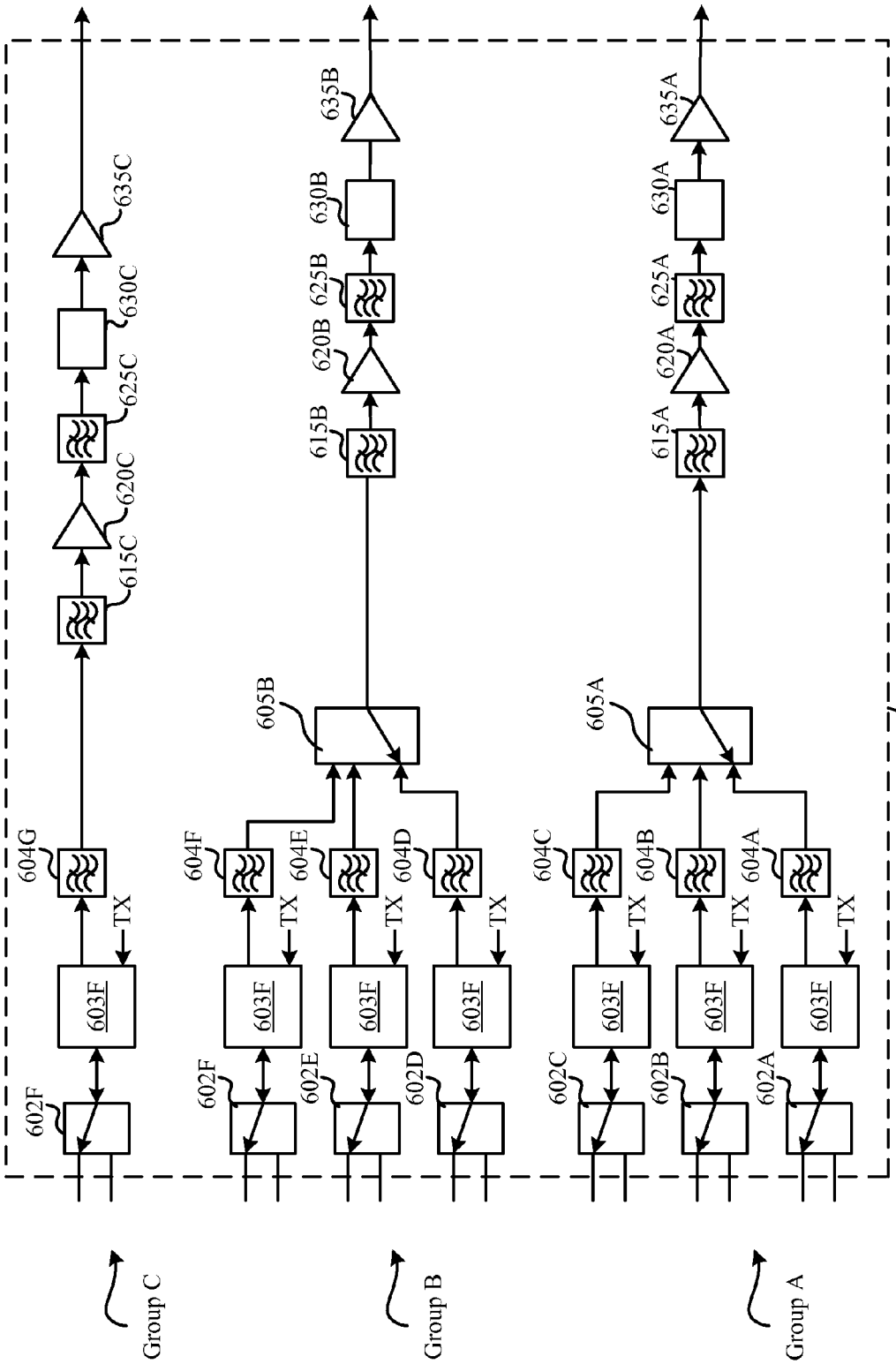
Group C
Group B
Group A
602F
603F
TX
604G
615C
620C
625C
630C
635C
602F
603F
TX
604F
605B
615B
620B
625B
630B
635B
602E
603F
TX
604E
602D
603F
TX
604D
602C
603F
TX
604C
605A
615A
620A
625A
630A
635A
602B
603F
TX
604B
602A
603F
TX
604A
414

FIG. 6A

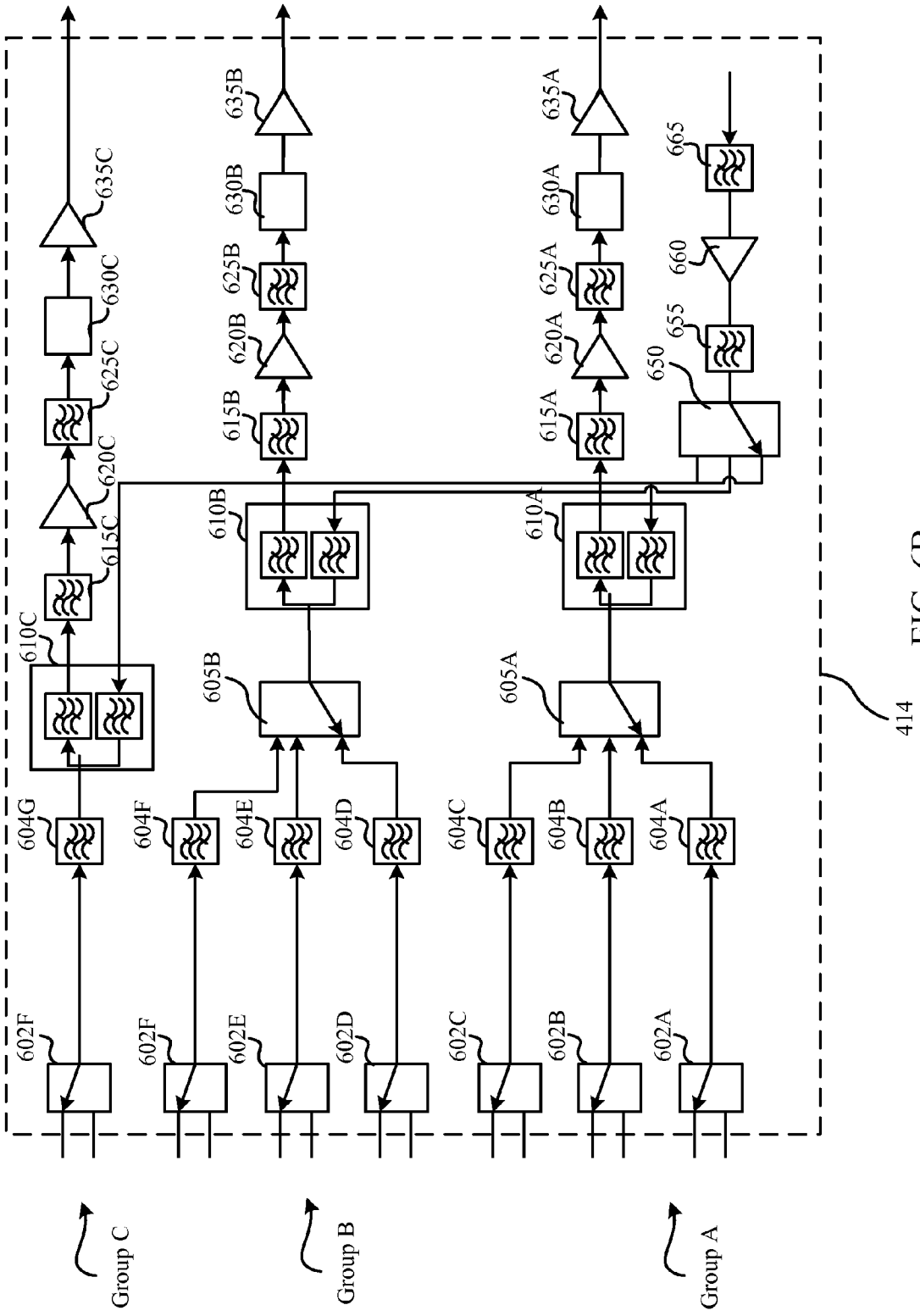
Group C
Group B
Group A
602F
602F
602E
602D
602C
602B
602A
604G
604F
604E
604D
604C
604B
604A
605B
605A
610C
610B
610A
615C
615B
615A
620C
620B
620A
625C
625B
625A
630C
630B
630A
635C
635B
635A
650
655
660
665
414

FIG. 6B

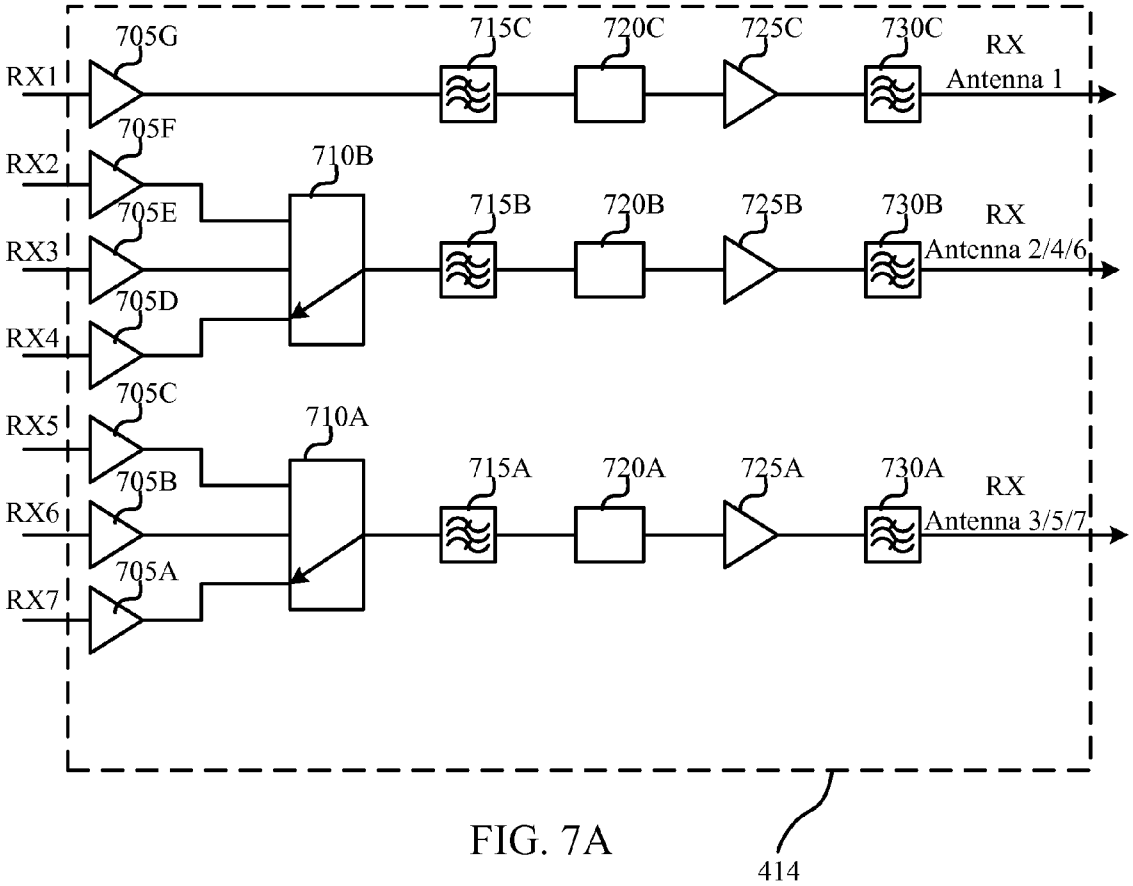
RX1
RX2
RX3
RX4
RX5
RX6
RX7
705G
705F
705E
705D
705C
705B
705A
710B
710A
715C
720C
725C
730C
715B
720B
725B
730B
715A
720A
725A
730A
RX
Antenna 1
RX
Antenna 2/4/6
RX
Antenna 3/5/7
414

FIG. 7A

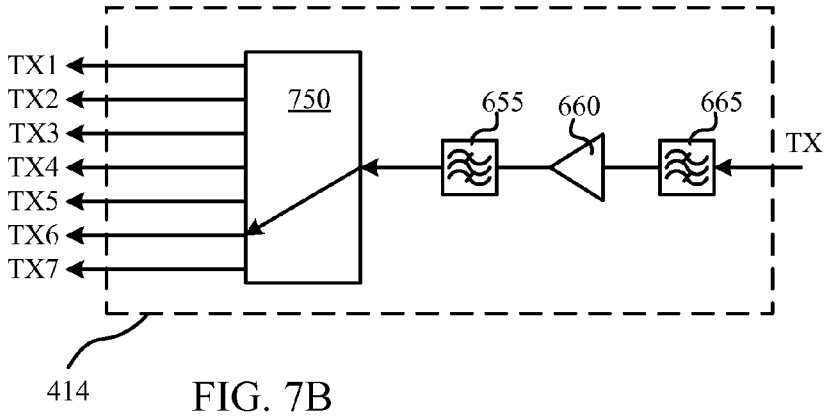
TX1
TX2
TX3
TX4
TX5
TX6
TX7
750
655
660
665
TX
414

FIG. 7B

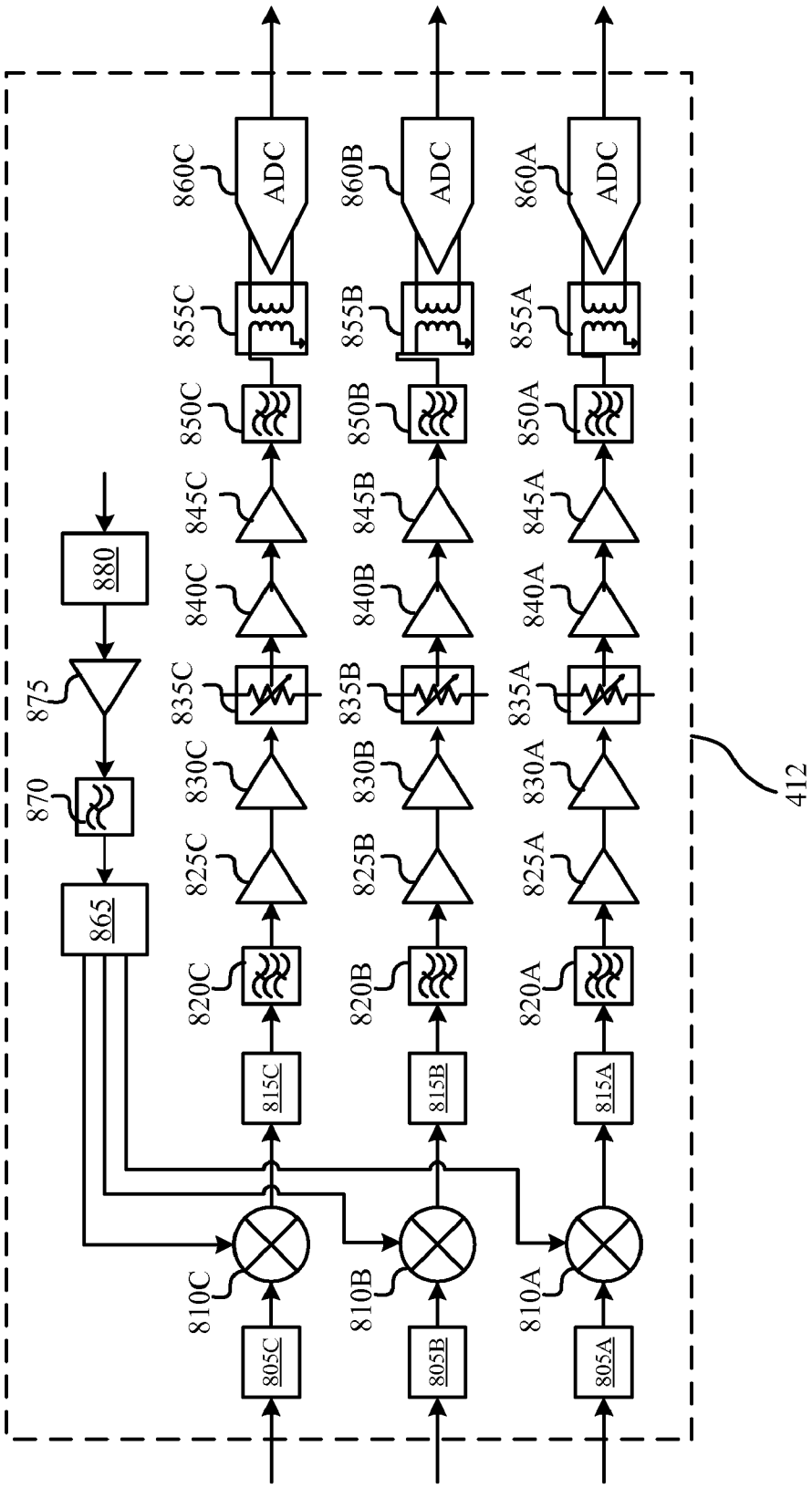
805C
805B
805A
810C
810B
810A
815C
815B
815A
820C
820B
820A
825C
825B
825A
830C
830B
830A
835C
835B
835A
840C
840B
840A
845C
845B
845A
850C
850B
850A
855C
855B
855A
860C
860B
860A
ADC
ADC
ADC
865
870
875
880
412

FIG. 8

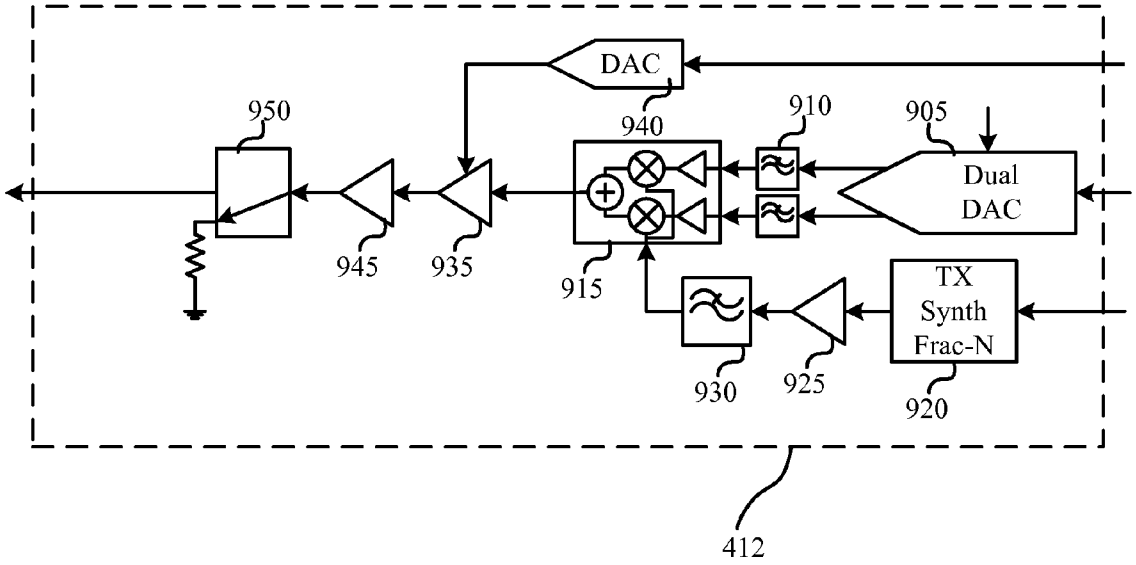
DAC
940
910
905
950
Dual
DAC
945
935
915
TX
Synth
Frac-N
930
925
920
412

FIG. 9

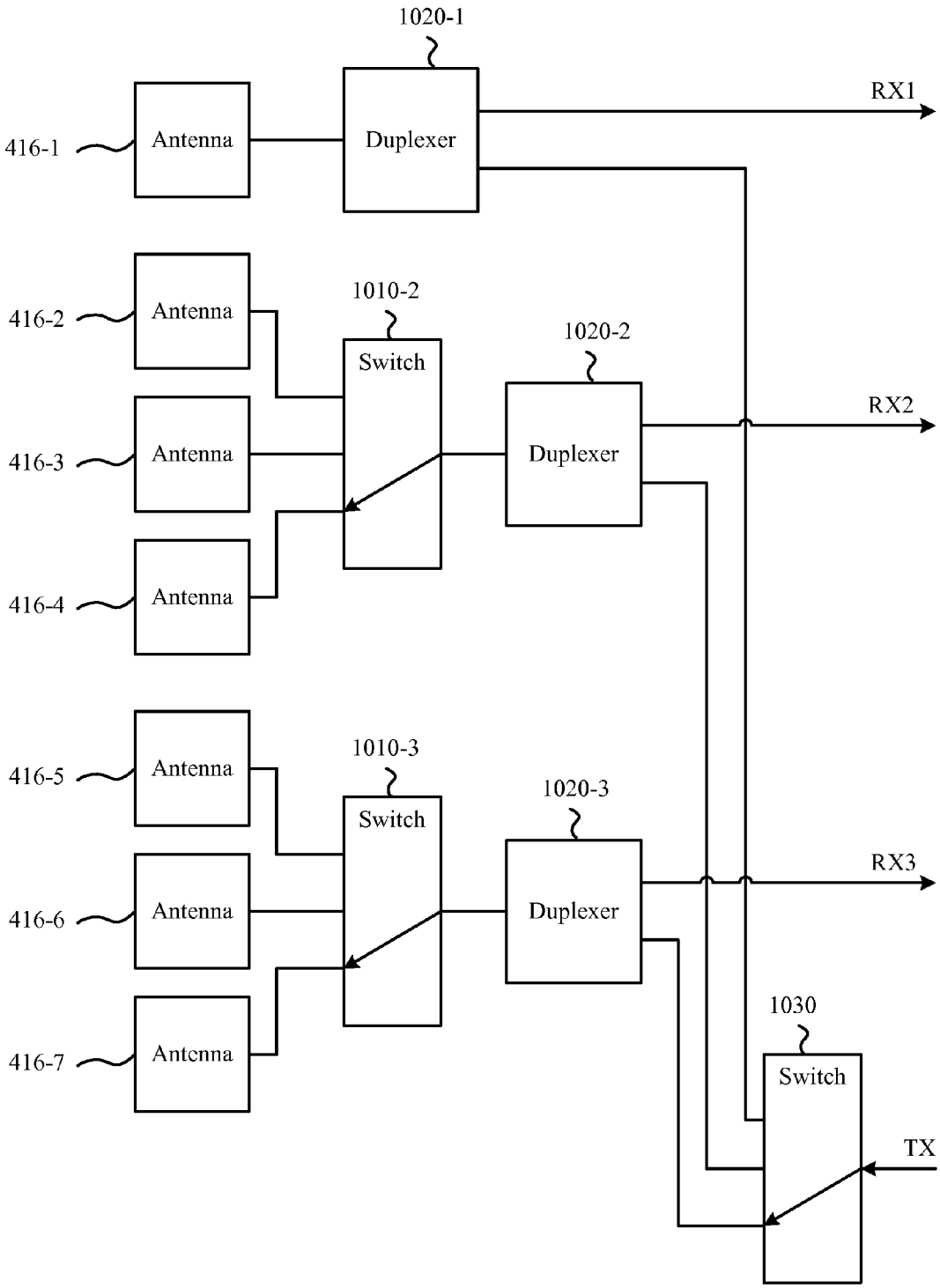
1020-1
RX1
416-1
Antenna
Duplexer
416-2
Antenna
1010-2
Switch
1020-2
RX2
416-3
Antenna
Duplexer
416-4
Antenna
416-5
Antenna
1010-3
Switch
1020-3
RX3
416-6
Antenna
Duplexer
1030
416-7
Antenna
Switch
TX

FIG. 10

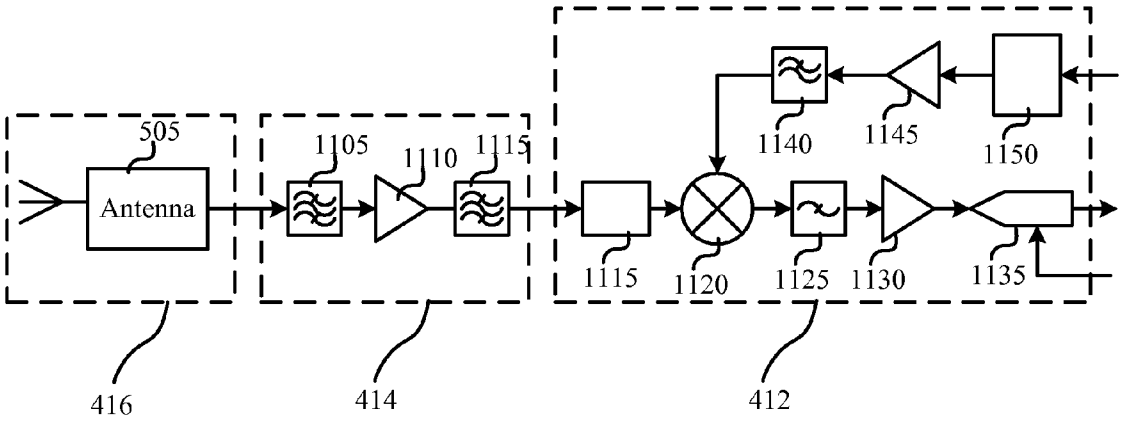
505
Antenna
1105
1110
1115
1140
1145
1150
1115
1120
1125
1130
1135
416
414
412

FIG. 11

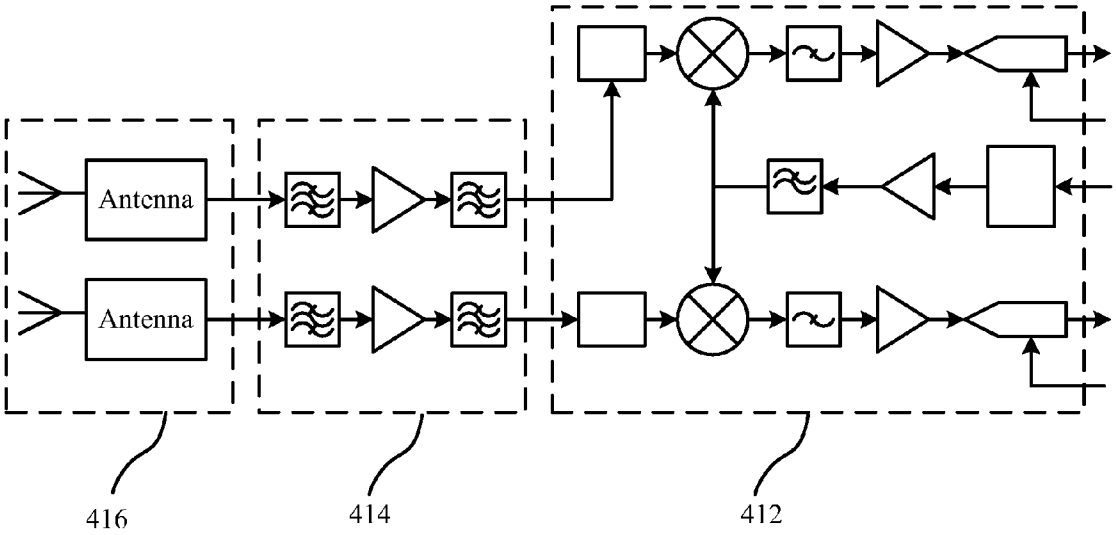

FIG. 12

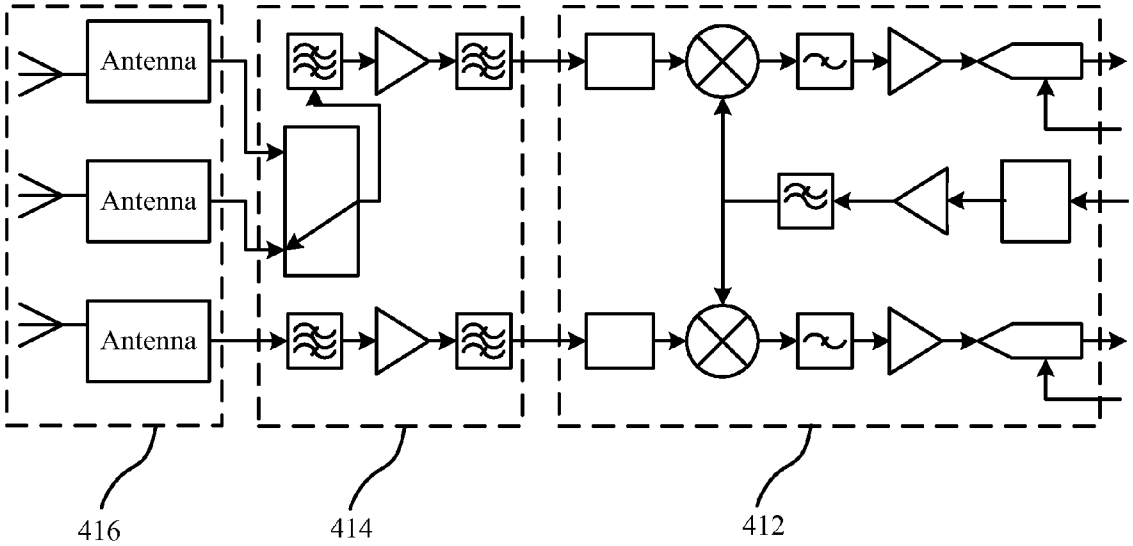

FIG. 13

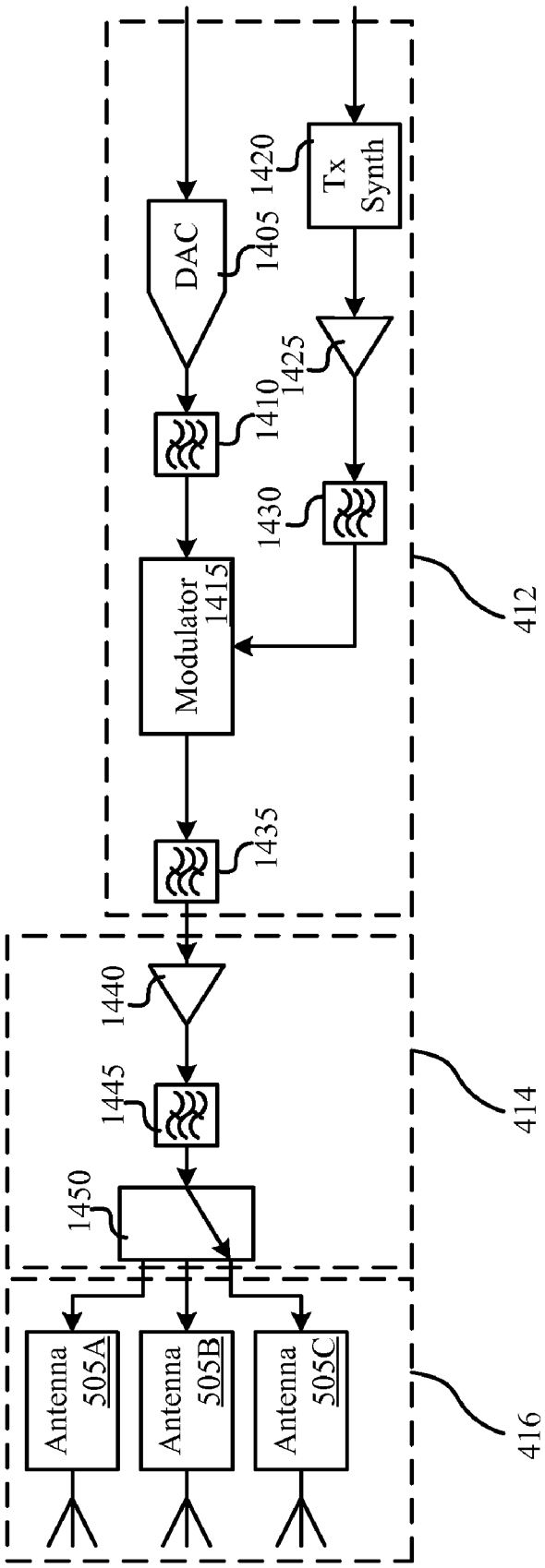
DAC
1405
Tx Synth
1420
1410
1425
1430
Modulator
1415
1435
412
1440
1445
1450
414
Antenna 505A
Antenna 505B
Antenna 505C
416

FIG. 14

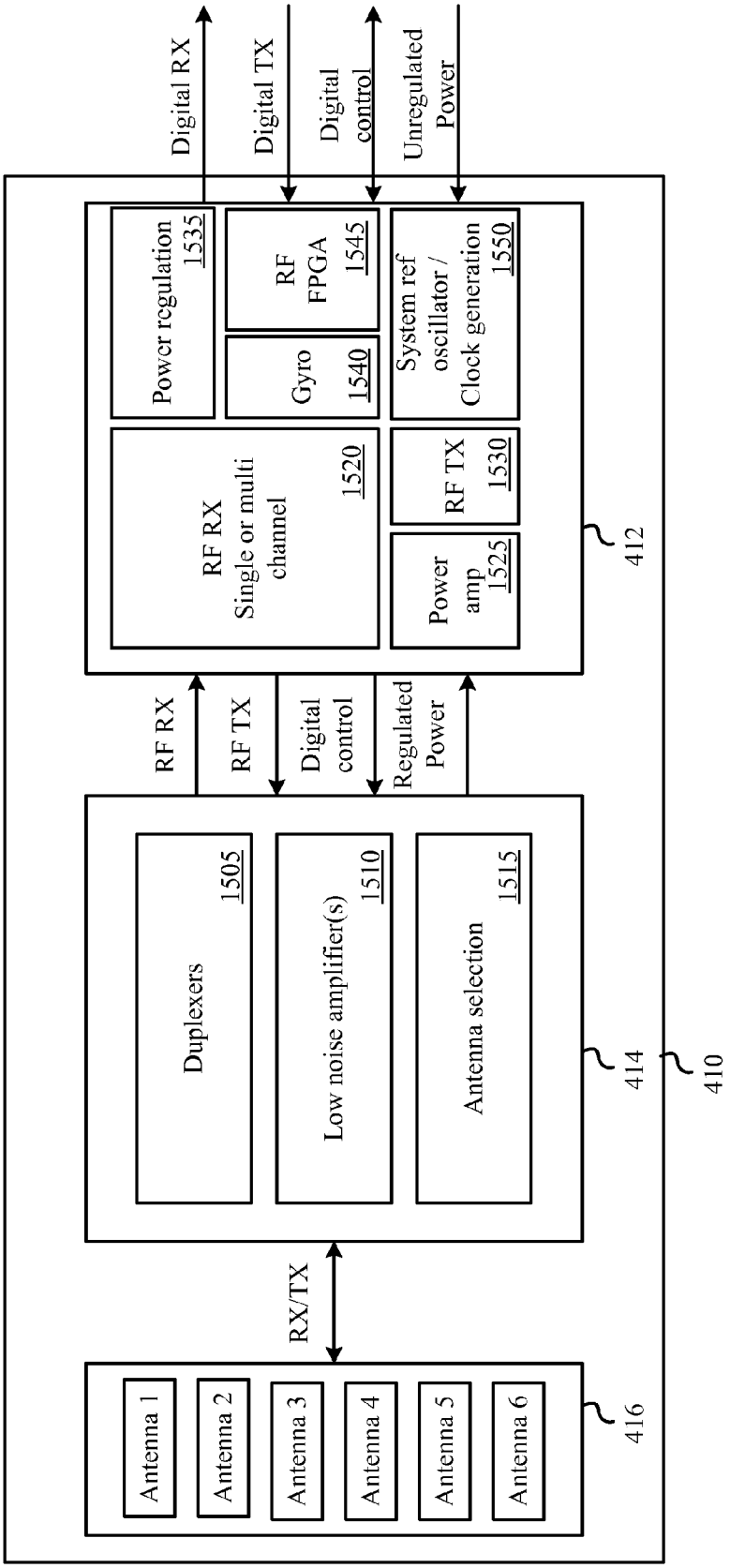
Digital RX
Digital TX
Digital control
Unregulated Power
Power regulation 1535
RF FPGA 1545
System ref oscillator / Clock generation 1550
Gyro 1540
RF RX Single or multi channel 1520
RF TX 1530
Power amp 1525
412
RF RX
RF TX
Digital control
Regulated Power
Duplexers 1505
Low noise amplifier(s) 1510
Antenna selection 1515
414
410
RX/TX
Antenna 1
Antenna 2
Antenna 3
Antenna 4
Antenna 5
Antenna 6
416

FIG. 15

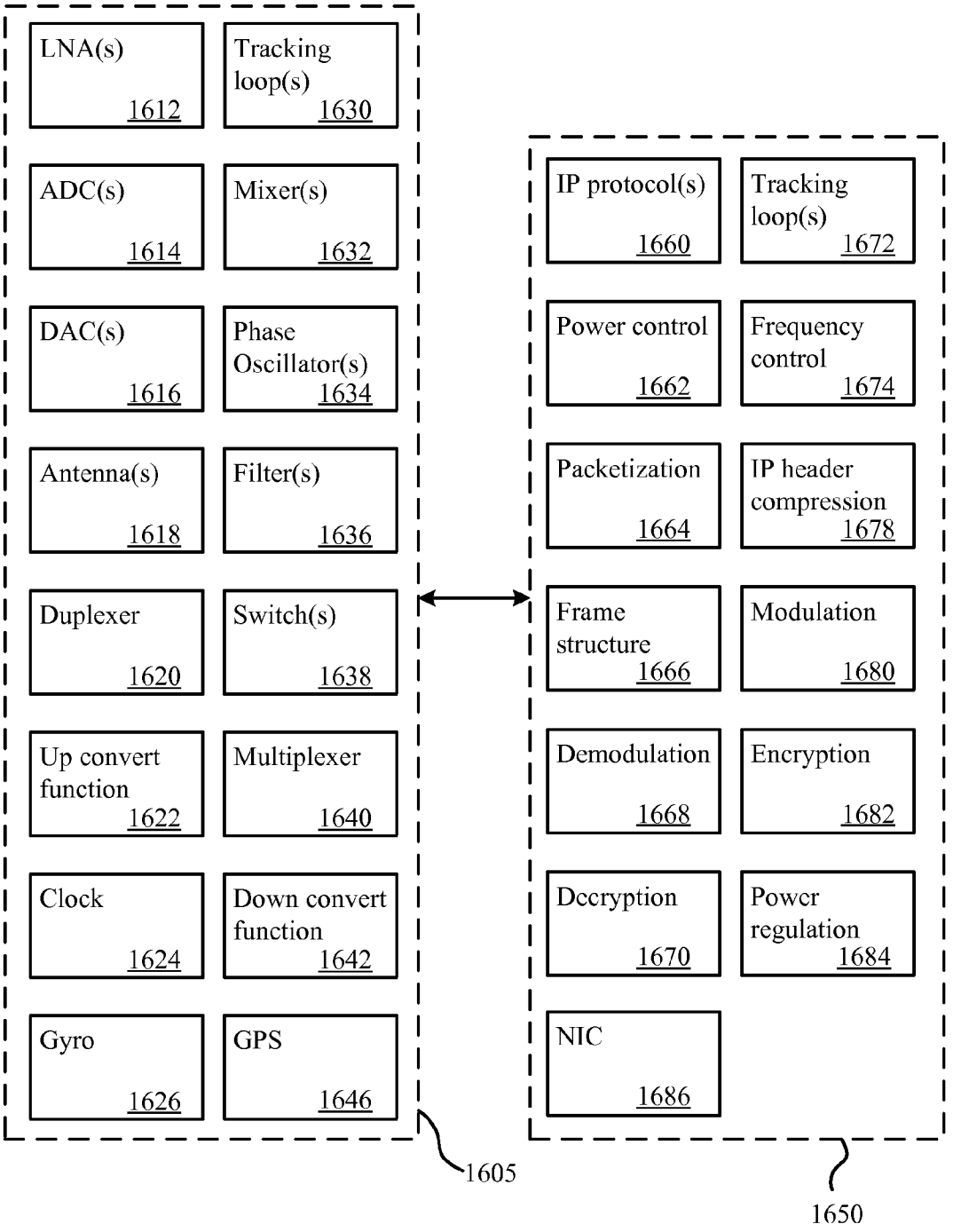
LNA(s) 1612
Tracking loop(s) 1630
ADC(s) 1614
Mixer(s) 1632
DAC(s) 1616
Phase Oscillator(s) 1634
Antenna(s) 1618
Filter(s) 1636
Duplexer 1620
Switch(s) 1638
Up convert function 1622
Multiplexer 1640
Clock 1624
Down convert function 1642
Gyro 1626
GPS 1646
1605
IP protocol(s) 1660
Tracking loop(s) 1672
Power control 1662
Frequency control 1674
Packetization 1664
IP header compression 1678
Frame structure 1666
Modulation 1680
Demodulation 1668
Encryption 1682
Decryption 1670
Power regulation 1684
NIC 1686
1650

FIG. 16

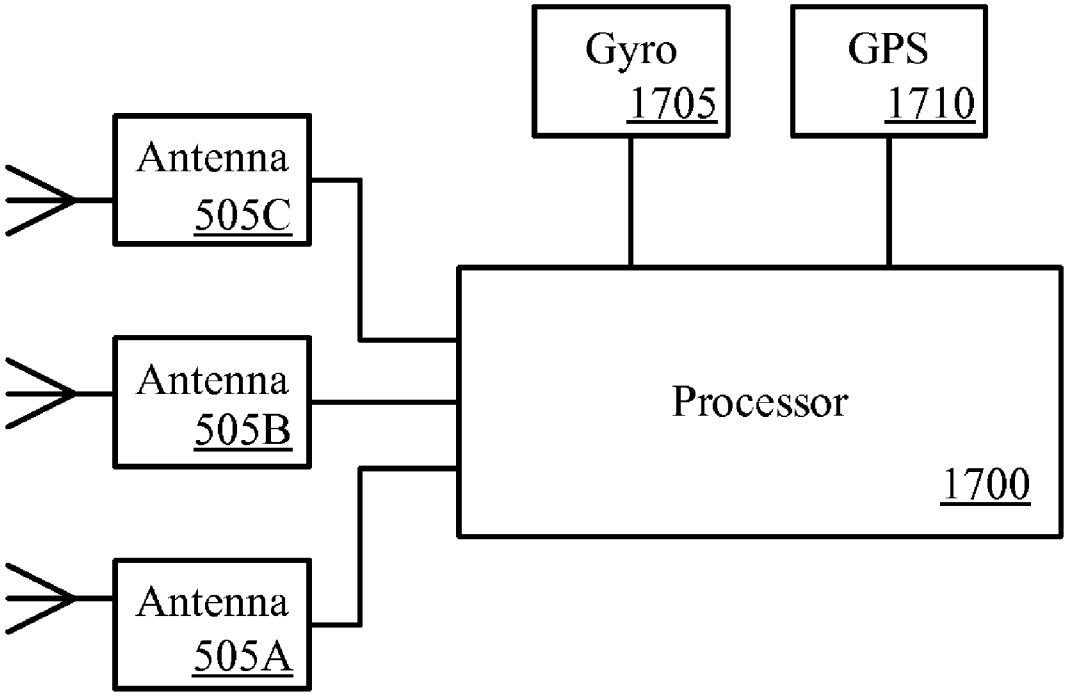
Gyro
1705
GPS
1710
Antenna
505C
Antenna
505B
Antenna
505A
Processor
1700

FIG. 17

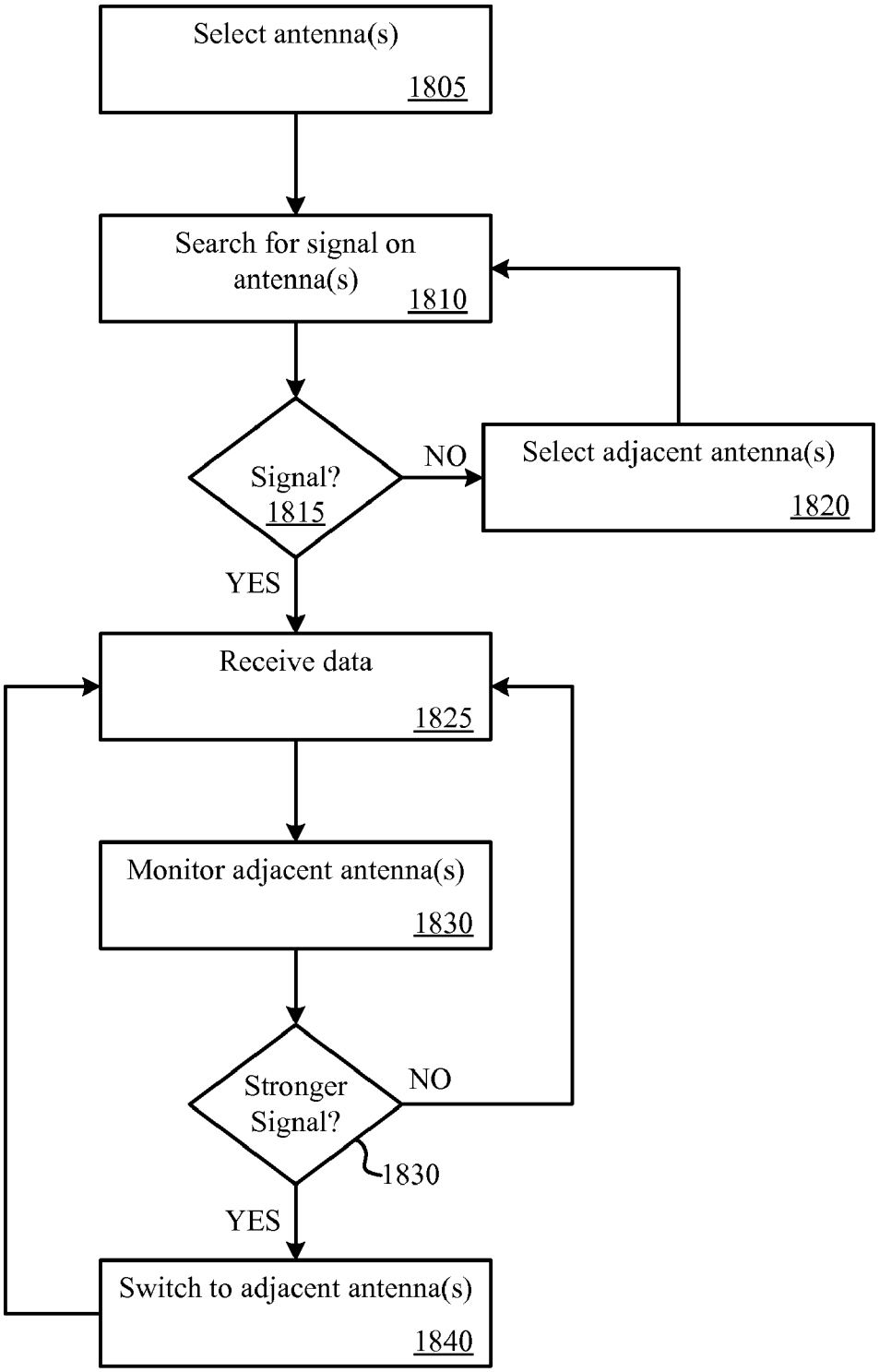
Select antenna(s)
1805
Search for signal on antenna(s)
1810
Signal?
1815
NO
Select adjacent antenna(s)
1820
YES
Receive data
1825
Monitor adjacent antenna(s)
1830
Stronger Signal?
NO
1830
YES
Switch to adjacent antenna(s)
1840

FIG. 18

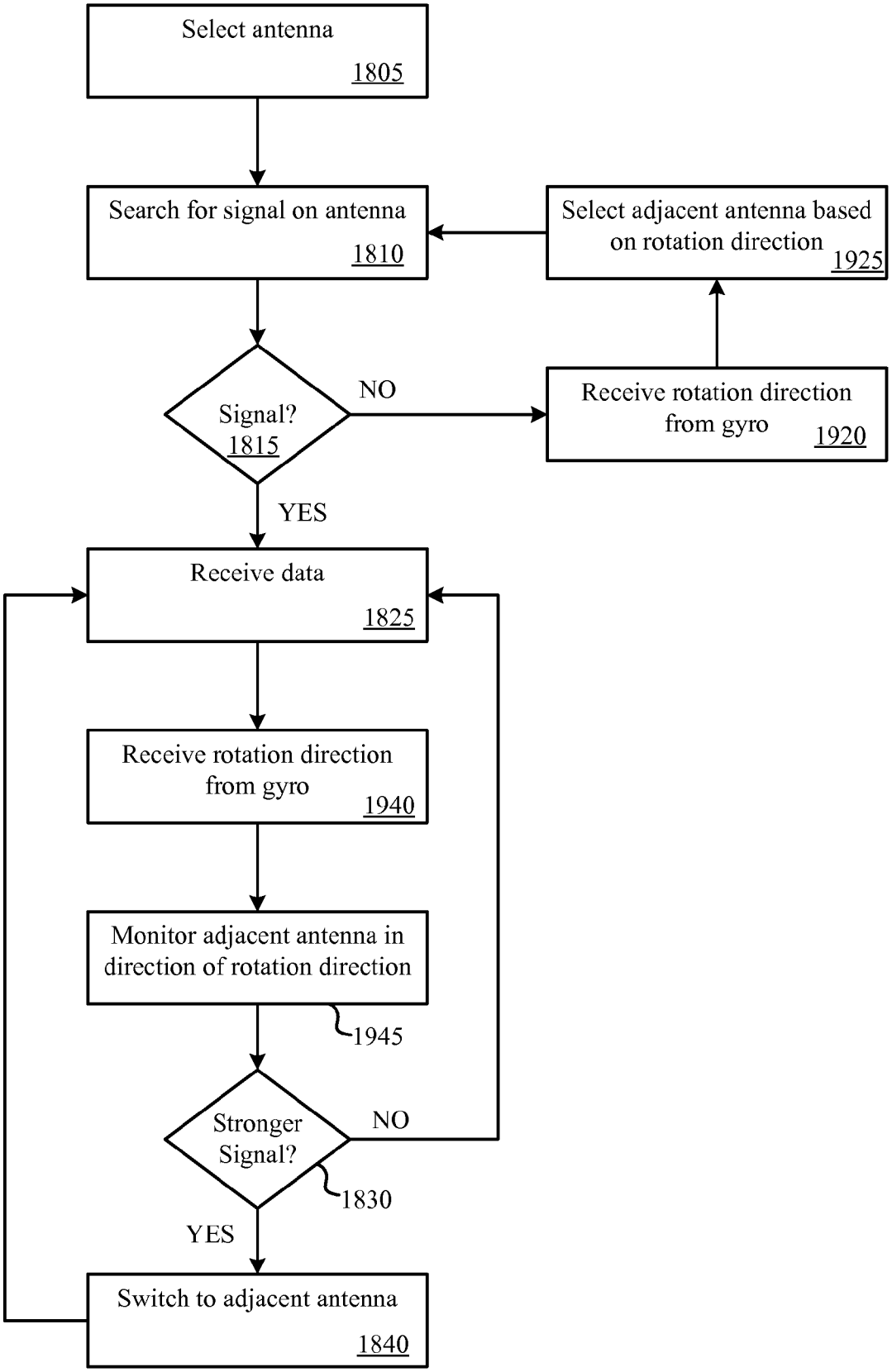
Select antenna
1805
Search for signal on antenna
1810
Select adjacent antenna based on rotation direction
1925
Signal?
1815
NO
Receive rotation direction from gyro
1920
YES
Receive data
1825
Receive rotation direction from gyro
1940
Monitor adjacent antenna in direction of rotation direction
1945
Stronger Signal?
1830
NO
YES
Switch to adjacent antenna
1840

FIG. 19

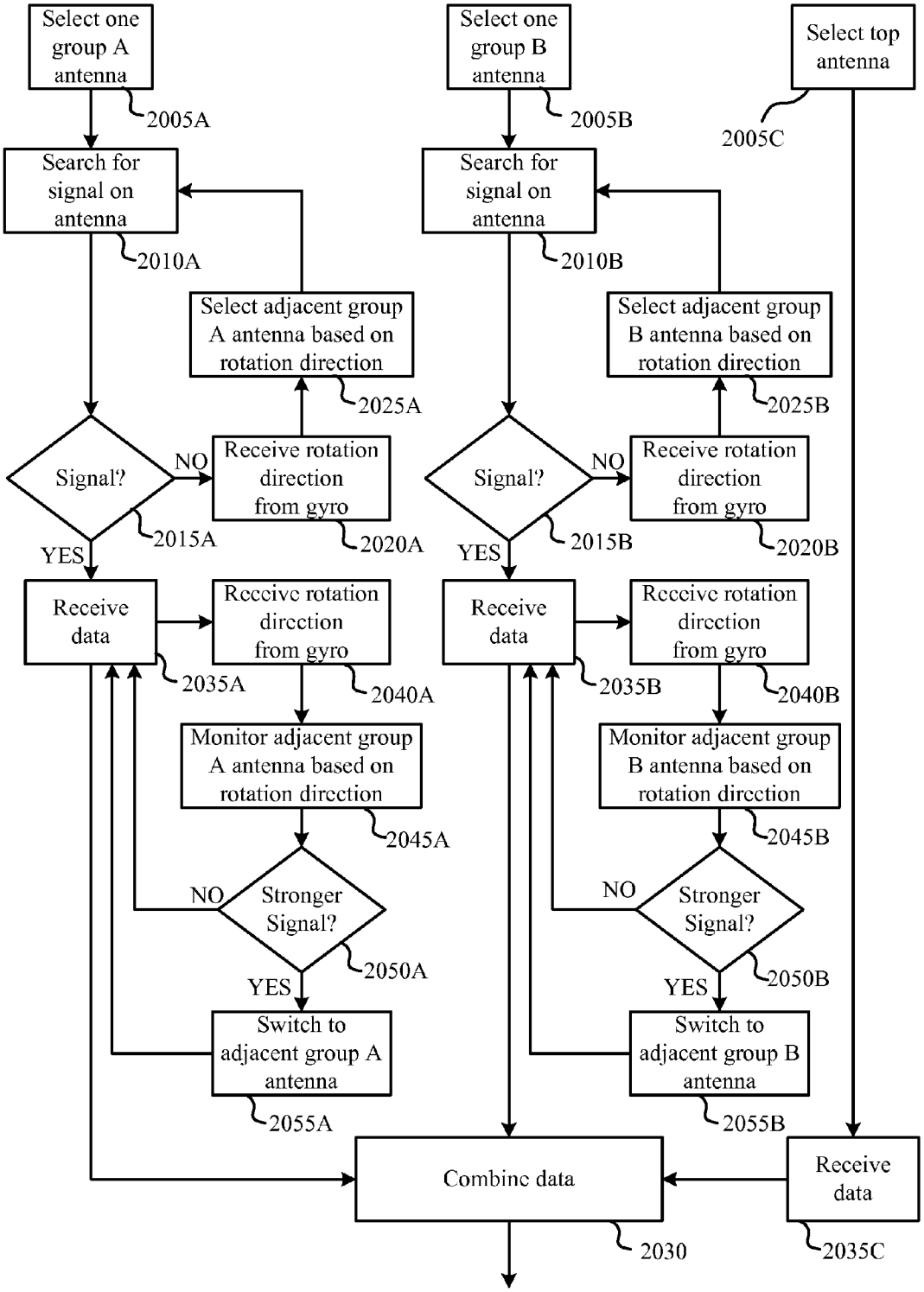
Select one group A antenna
2005A
Search for signal on antenna
2010A
Select adjacent group A antenna based on rotation direction
2025A
Signal?
NO
Receive rotation direction from gyro
2020A
2015A
YES
Receive data
2035A
Receive rotation direction from gyro
2040A
Monitor adjacent group A antenna based on rotation direction
2045A
NO
Stronger Signal?
2050A
YES
Switch to adjacent group A antenna
2055A
Select one group B antenna
2005B
Search for signal on antenna
2010B
Select adjacent group B antenna based on rotation direction
2025B
Signal?
NO
Receive rotation direction from gyro
2020B
2015B
YES
Receive data
2035B
Receive rotation direction from gyro
2040B
Monitor adjacent group B antenna based on rotation direction
2045B
NO
Stronger Signal?
2050B
YES
Switch to adjacent group B antenna
2055B
Select top antenna
2005C
Combine data
2030
Receive data
2035C

FIG. 20

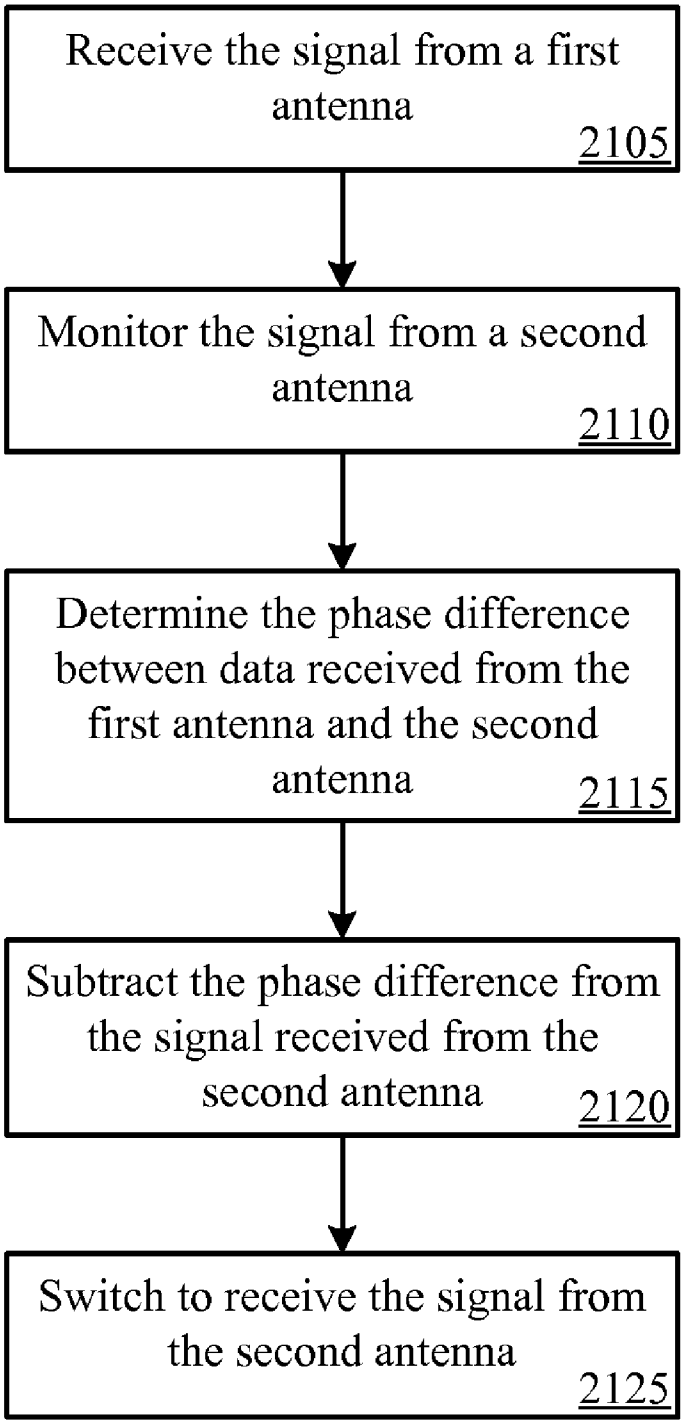
Receive the signal from a first antenna
2105
Monitor the signal from a second antenna
2110
Determine the phase difference between data received from the first antenna and the second antenna
2115
Subtract the phase difference from the signal received from the second antenna
2120
Switch to receive the signal from the second antenna
2125

FIG. 21

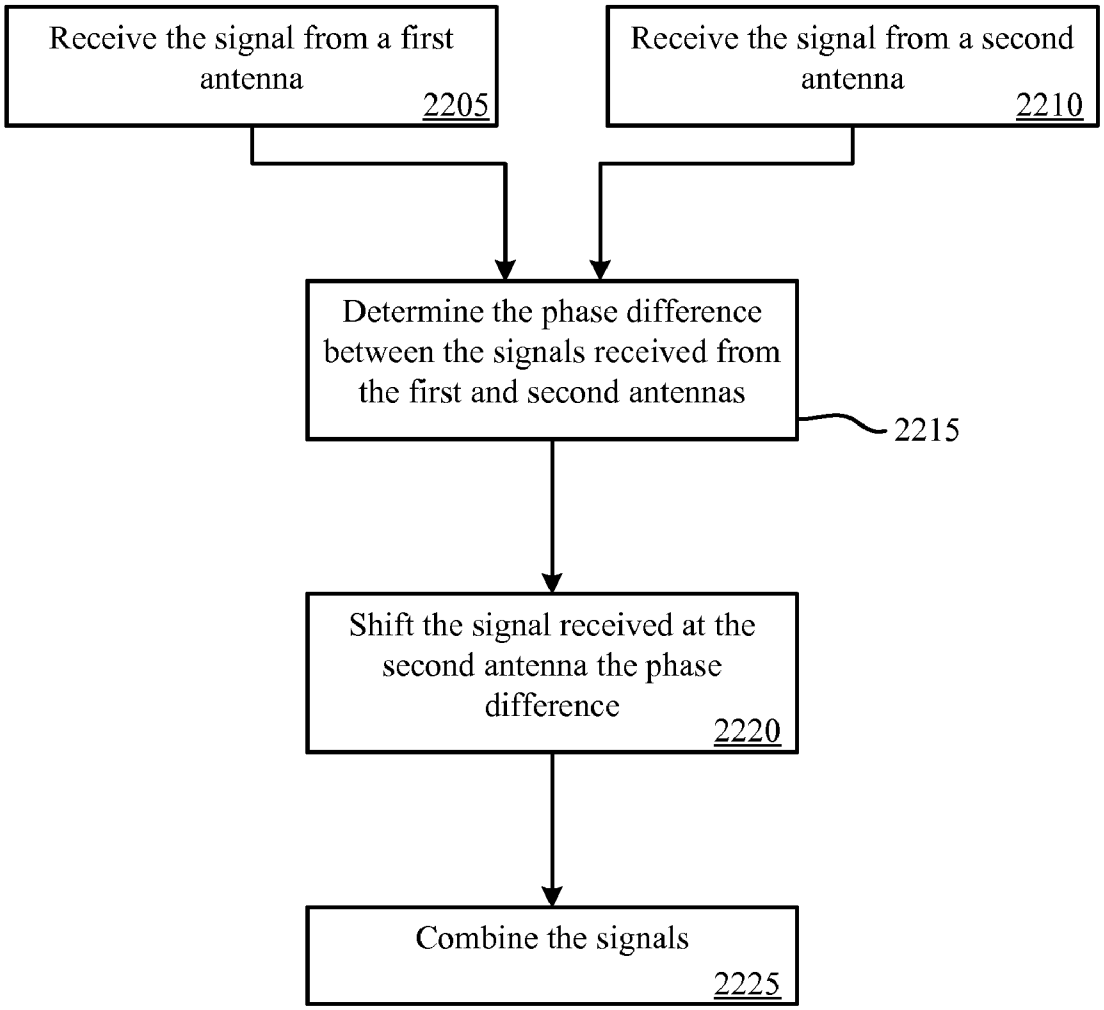
Receive the signal from a first antenna
2205
Receive the signal from a second antenna
2210
Determine the phase difference between the signals received from the first and second antennas
2215
Shift the signal received at the second antenna the phase difference
2220
Combine the signals
2225

FIG. 22

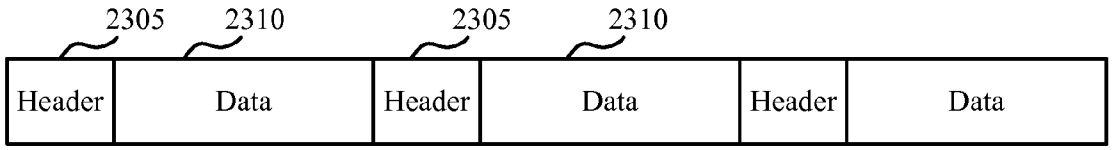

FIG. 23

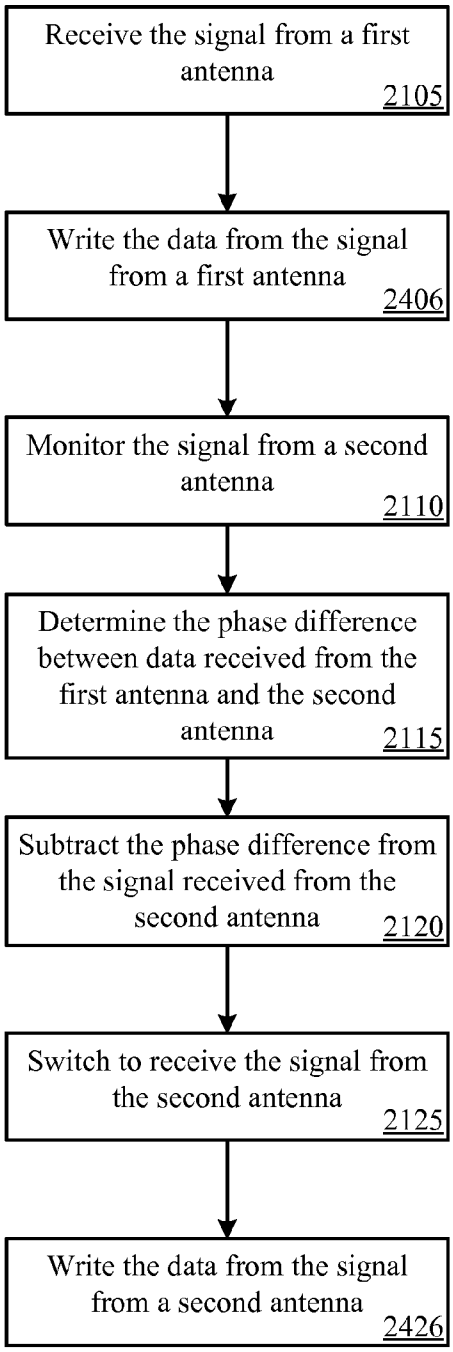
Receive the signal from a first antenna
2105
Write the data from the signal from a first antenna
2406
Monitor the signal from a second antenna
2110
Determine the phase difference between data received from the first antenna and the second antenna
2115
Subtract the phase difference from the signal received from the second antenna
2120
Switch to receive the signal from the second antenna
2125
Write the data from the signal from a second antenna
2426

FIG. 24

SOFT HANDOFF USING A MULTI-BEAM ANTENNA SYSTEM

CROSS-REFERENCES TO RELATED APPLICATIONS

[0001] This application is a non-provisional, and claims the benefit, of commonly assigned U.S. Provisional Application No. 60/961,073, filed Jul. 17, 2007, entitled "Modular Transceiver And Multi-Beam Antenna System," the entirety of which is herein incorporated by reference for all purposes.

BACKGROUND OF THE INVENTION

[0002] This disclosure relates in general to transceivers and, but not by way of limitation, to modular transceivers employing multiple antennas amongst other things.

[0003] The escalation of high bandwidth requirements for military and commercial applications increases the need for small, modular transceivers. Military applications, moreover, often require robust and highly reliable systems. In some cases, the choice of communication band may change during an operation. For example, a military operation may require communication over the X-band during part of a mission and communication over the Ku-band over another part of the mission. Current transceiver devices make such conversions extremely cumbersome.

[0004] Moreover, as a mobile unit moves, rotates, and/or turns, the line of site between the transceiver and the mobile unit changes over time. Finding and keeping reliable line of sight is demanding. There is a general need in the art for reliable, modular satellite transceivers.

BRIEF SUMMARY

[0005] A modular satellite transceiver is provided according to some embodiments. The modular transceiver may include an RF module and a back end module. The RF module may operate in a first band, and may include, for example, one or more antennas, an RF front end module, an up converter, a down converter, an analog-to-digital converter, and a digital-to-analog converter. The back end module may include various digital processing components and/or modules. The RF module may be removably coupled with the back end module such that the RF module may be replaced with another RF module operating in a second band. During transmission the back end module may provide at least one digital signal to the RF module; and during reception the RF module provides at least one digital signal to the back end module.

[0006] Another modular satellite transceiver is provided according to some embodiments, and may include an RF module and a back end module. The RF module may include a first antenna, a second antenna, one or more amplifiers, a digital-to-analog converter, an analog-to-digital converter, an up converter, and a down converter. The RF module is configured to receive a packetized digital signal, up convert the signal and transmit the signal to a satellite through the first or second antenna. The RF module may also be configured to receive a signal from the first or second antenna, down convert the signal, and digitize the signal. Moreover, the back end module may be removably coupled with the RF module. The back end module may also include at least a packetization module; and may provide and receive packetized digital signals to and from the RF module.

[0007] In some embodiments the back end module may include encryption and/or decryption modules. In other embodiments, the back end module provides power conditioning to at least the RF module. In some embodiments, the digital signal provided by the back end module is independent of communication waveform and/or independent of bandwidth. The back end module, in some embodiments, may packetize transmitted data and/or depacketize received data.

[0008] A method for sending packetized data to a satellite using a modular transceiver that includes a back end module and an RF module is also provided according to some embodiments. Data may be digitally packetized at the back end module and provided to the modular front end module. The RF module may then convert the packetized data signal into an analog signal, up convert the analog packetized data signal, and transmit the analog packetized data signal toward the satellite using a first antenna.

[0009] Another method for receiving data from a satellite using a modular transceiver that includes a back end module and an RF module is provided according to some embodiments. A data signal is received from a satellite with an antenna at the RF module. The signal may then be down converted and converted from an analog signal into a digital signal at the RF module. The signal may then be digitally demodulated.

[0010] Another modular satellite transceiver is provided according to some embodiments, and may include a plurality of antennas and a processor coupled with the antennas. The plurality of antennas may, for example, include a subset of antennas arranged around a central location. The azimuth coverage of the plurality of antennas may comprise up to about 360°. The elevation coverage of each antenna may comprise between about 5° and about 90°. The processor may select at least one antenna from the plurality of antennas for communication with a satellite. The processor may include various instructions including instructions for receiving data from the satellite using a first antenna of the plurality of antennas; instructions for monitoring a second antenna of the plurality of antennas while the first antenna is receiving data from the satellite, wherein the second antenna is adjacent to the first antenna, and the second antenna covers an area adjacent to and overlapping with the area covered by the first antenna; instructions for determining the signal strength of the signal detected from the second antenna; instructions for determining if the signal strength of the signal detected from the second antenna is greater than the signal strength of the signal detected from the first antenna; instructions for switching to the second antenna if the signal strength of the signal detected from the second antenna is greater than the signal strength of the signal detected from the first antenna; and instructions for receiving data from the satellite using the second antenna.

[0011] A method for communicating with a satellite using a plurality of antennas is also provided according to some embodiments. The method may include receiving data from the satellite using a first antenna from the plurality of antennas and determining the signal strength of the signal detected from the first antenna. Data may be transmitted to the satellite using the first antenna. A second antenna adjacent to the first antenna may partially overlap with the first antenna in coverage. The signal strength of the signal detected from the second antenna may be monitored. If the signal strength of the signal detected from the second antenna is greater than the signal strength of the signal detected from the first antenna, then data is transmitted over the second antenna.

[0012] A method for providing a soft handoff between antennas is provided according to some embodiments. A first packetized digital data stream is received from a satellite using a first antenna and the data stream may include a plurality of packets that each include a header and data. The data is provided, forwarded or stored in memory. In the meantime, a second packetized digital data stream is monitored. The second packetized digital data stream may be received from the satellite using a second antenna. The phase difference between the first packetized digital data stream and the second packetized digital data stream may be determined and added or subtracted from the second packetized digital data stream. The second packetized digital data stream may then be provided, forwarded or stored in memory.

[0013] Another method is provided according to some embodiments. The method includes receiving a first packetized digital data stream from a satellite using a first antenna. The first packetized digital data stream includes a plurality of packets, each packet comprising a header and data. A second packetized digital data stream is received from the satellite using a second antenna. The phase difference between the first packetized digital data stream and the second packetized digital data stream is determined and subtracted from the second packetized digital data stream. The two data streams may then be combined.

[0014] A satellite transceiver is provided according to some embodiments. The transceiver may include a plurality of antennas, a processor, and memory. At least a subset of the plurality of antennas may be arranged around a central location. The azimuth coverage of the plurality of antennas include at least about 360°. The elevation coverage of each antenna includes between about 5° and about 90°. The processor may be coupled with the plurality of antennas for communication with a satellite. The memory may be configured to store processor instructions and data. The processor instructions may include: Instructions for receiving a first packetized digital data stream, wherein the first packetized digital data stream may be received from a satellite using a first antenna, and wherein the first packetized digital data stream includes a plurality of packets, each packet comprising a header and data; instructions for writing the data from the first packetized digital data stream into memory; instructions for monitoring a second packetized digital data stream, wherein the second packetized digital data stream may be received from the satellite using a second antenna, and wherein the second packetized digital data stream includes a plurality of packets, each packet comprising a header and data; instructions for determining the phase difference between the first packetized digital data stream and the second packetized digital data stream; instructions for subtracting the phase difference to the second packetized digital data stream; and instructions for writing the data from the second packetized digital data stream into memory, in some embodiments, this data may be the result of the phase difference arithmetic.

[0015] A modular transceiver with a small footprint is disclosed in one embodiment. The small footprint may be less than about 10 inches wide by 10 inches wide by 4 inches tall. The modular transceiver may be less than about 400 cubic inches in volume. In one alternative, the modular transceiver may be less than about 305 cubic inches.

[0016] A transceiver with more than one antenna group is also disclosed according to one embodiment. Each antenna group may include at least one antenna and may be configured to transmit and receive a signal using a single antenna within the antenna group. In one embodiment the transceiver may include a first group, a second group, and a third group; the first group may include three antennas, the second group comprises three antennas, and the third group comprises one antenna. The transceiver may provide 360° azimuth coverage. The transceiver may provide at least about 5° to about 90° elevation coverage.

[0017] A modular transceiver comprising a small footprint is disclosed according to one embodiment. A transceiver comprising more than one antenna group is also disclosed according to another embodiment. The transceiver may comprise antenna groups each with at least one antenna. Each antenna group may also be configured to transmit and receive a signal using a single antenna within the antenna group. The transceivers disclosed according to embodiments of the invention may also provide 360° azimuth coverage and at least about 5° to 90° elevation coverage.

BRIEF DESCRIPTION OF THE DRAWINGS

[0018] FIGS. **1**A-**1**C show a perspective view, top view and side view of a radome of a modular satellite transceiver according to one embodiment.

[0019] FIG. **2** shows antenna patches within a modular transceiver according to one embodiment.

[0020] FIG. **3** shows an exploded view of a front end module of a transceiver-antenna assembly according to one embodiment.

[0021] FIG. **4** shows a block diagram showing an RF module and a back end module according to another embodiment.

[0022] FIG. **5** shows a block diagram of an antenna module with a plurality of antennas according to one embodiment.

[0023] FIGS. **6**A-**6**B shows a block diagram of an RF front end module according to one embodiment.

[0024] FIG. **7**A shows a block diagram of receiver components of another RF front end module according to one embodiment.

[0025] FIG. **7**B shows a block diagram of transmitter components of another RF front end module according to one embodiment.

[0026] FIG. **8** shows a block diagram of receiver components of a band converter module according to one embodiment.

[0027] FIG. **9** shows a block diagram of transmitter components of a band converter module according to one embodiment.

[0028] FIG. **10** shows a block diagram showing transmission and reception of a signal using multiple antennas according to one embodiment.

[0029] FIG. **11** shows an RF module with an antenna module, front end module, and a band conversion module according to one embodiment.

[0030] FIG. **12** shows an RF module with an antenna module, front end module, and a band conversion module according to one embodiment.

[0031] FIG. **13** shows an RF module with an antenna module, front end module, and a band conversion module according to one embodiment.

[0032] FIG. **14** shows an RF module with an antenna module, front end module, and a band conversion module according to one embodiment.

[0033] FIG. **15** shows another block diagram of an RF module with an antenna module, front end module, and a band conversion module according to one embodiment.

[0034] FIG. **16** shows a block diagram showing examples of components in an RF module and a back end module according to various embodiments.

[0035] FIG. **17** shows a block diagram of a signal tracking system according to one embodiment.

[0036] FIG. **18** shows a flowchart of a method for tracking a satellite using multiple antennas according to one embodiment.

[0037] FIG. **19** shows another flowchart of a method for tracking satellites using multiple antennas and a gyroscopic element according to one embodiment.

[0038] FIG. **20** shows another flowchart of a method for tracking satellites using at least three antenna groups and a gyroscopic element according to one embodiment.

[0039] FIG. **21** shows a flowchart of a method for completing a soft transition from one antenna to another antenna according to one embodiment.

[0040] FIG. **22** shows a flowchart of a method for adjusting the phase of two received signals and combining the two signals.

[0041] FIG. **23** shows an example of a data structure according to one embodiment.

[0042] FIG. **24** shows another flowchart of a method for completing a soft transition from one antenna to another antenna according to one embodiment.

[0043] In the appended figures, similar components and/or features may have the same reference label. Where the reference label is used in the specification, the description is applicable to any one of the similar components having the same reference label.

DETAILED DESCRIPTION OF THE INVENTION

[0044] The ensuing description provides embodiments only, and is not intended to limit the scope, applicability or configuration of the disclosure. Rather, the ensuing description of the embodiment(s) will provide those skilled in the art with an enabling description for implementing a embodiment. Various changes may be made in the function and arrangement of elements without departing from the spirit and scope as set forth in the appended claims.

[0045] A modular satellite transceiver is disclosed herein in various embodiments. The modular transceiver, in one embodiment, may include an RF module and a back end module, the two modules may digitally communicate with each other. For example, the back end module may provide digital data packets to the RF module to convert to analog, up convert, amplify and/or mix prior to transmission through the satellite. Moreover, the module satellite transceiver, in another embodiment, may also include a plurality of antennas. These antennas, for example, may be arranged around a central location. The RF module may be replaced with another RF module configured to operate in a different communication band. For example, a Ku band RF module may be replaced with an X band RF module without requiring any changes to the back end module.

[0046] A satellite transceiver is also disclosed that switches between various antennas to establish and maintain link with a satellite in various embodiments. For example, the transceiver may include four antennas arranged about a central location and covering a substantial portion of the sky. The transceiver, for example, may select a first antenna and monitor data received from the first antenna. If no signal is received or detected or if the signal is not strong enough to read, then the transceiver may select and monitor a second antenna. If no signal is received or detected or if the signal is not strong enough to read, then another antenna is selected, and so on. When a signal is detected, the transceiver may receive the data from the signal. In another embodiment, as the data is being received, the transceiver monitors the adjacent antenna or antennas. If a stronger signal is detected from an adjacent antenna, then the transceiver switches and receives the data from the adjacent antenna with the stronger signal. By switching between antennas in such a fashion, line of sight between the satellite and the transceiver may be maintained.

[0047] In various other embodiments disclosed herein, the switching from receiving data from a first antenna to receiving data from a second antenna is performed using a soft handoff. According to some embodiments, the data received is packetized into at least a header and data. A soft handoff may include monitoring the phase of the signal by monitoring known data sequences in the header of signals received at the first and the second antennas. During a handoff, the phase difference between the two signals may be subtracted from or added to the data received from the second antenna. In various other embodiments, more than one antenna may receive a data signals, which may be combined using any combining technique and/or algorithm, for example, maximum ratio combining, equal gain combining, ratio-squared combining and/or predetection combining.

[0048] FIGS. **1A-1C** show a perspective view, top view and side view of a radome of an RF module **100** of a modular satellite transceiver according to one embodiment. In some embodiments, the exterior of the RF module includes a radome **105** and/or a base plate **110**. The RF module **100** may be replaced with another RF module that operates in a different band. For example, the original RF module **100** may operate in the L-Band. This RF module **100** may be replaced with another RF module **100** that operates in any other band, such as, for example, the X-Band, Ku-Band, and/or the Ka-Band. Another embodiment allows for field replacement of the RF module **100** and assemblies without replacing the backend assembly.

[0049] In some embodiments, as shown, the exterior of the RF module **100** comprises a radome **105**. The radome **105** may enclose a plurality of antennas and may be coupled with a base. The radome **105** may comprise a cylinder-like shape. Other radome **105** embodiments may include multi-facet shapes, smooth sectional shapes blended together or combinations of facets and smoothly varying sections enclosing the antenna elements. In some embodiments, the modular transceiver may be used within an airborne or land based configuration. In some embodiments, the radome **105** may be less than about 8.725 inches wide by about 8.725 inches wide by about 5 inches high. In another embodiment, the dimensions of the radome **105** may be less than about 10 inches wide by 10 inches wide by 5 inches high. In yet another embodiment, the radome **105** may include a mostly cylindrical shape with a 8.275 diameter and a height of 5 inches. In another embodiment, the radome **105** height is less than about 4 inches. Various other embodiments may include a width or diameter of less than about 7, 7.5, 8, 8.5, 9.5, 10.5, and/or 11 inches as well as a height of less than about 3, 3.25, 3.5, 3.75, 4, 4.25, 4.5, 4.75, 5.25, 5.5, 5.75, or 6 inches. In yet other embodiments, the radome **105** may comprise a volume less than about 400 cubic inches. Moreover, in another embodiment, the transceiver may comprise a volume less than about 390, 380, 370, 360, 350, 340, 110, 320, 310, 305 or 300 cubic inches.

[0050] FIG. **2** shows the interior of the RF module **100** with seven patch antennas **205** according to one embodiment. In some embodiments, each antenna **205** may comprise, for example, a patch antenna or another surface mounted antenna. In this example, six antennas **205**A, **205**B, **205**C, **205**D, **205**E, and **205**G are arrayed in a hexagonal pattern around a central antenna **205**F. In one embodiment, the six side antennas may be similar antennas and the top antenna may be unique or similar. Each of the individual antennas may be modular. For example, the antennas may each be quickly replaced in the field. For example, an antenna may be replaced by removing the radome **105**, unsecuring the antenna, and disconnecting the antenna.

[0051] In another embodiment of the invention, the antenna assembly, including each of the patch antennas is modular and may also be quickly replaced. FIG. **3** shows an exploded view of portions of an RF module **100** according to one embodiment. As shown in the figure, an antenna patch assembly **320** may be mounted on an antenna housing **325** that is then connected with other circuitry **335**, which may include, for example, the RF front end module and the band converter module, and the bottom plate **105**. A mounting ring may be used to secure the radome **105** with the base plate **110**. The antenna housing **325** and bottom plate **110** may then be coupled with a backend module. Accordingly, the RF module **100** and the antennas therein may be replaced by simply replacing the independent RF module **100**. This replacement may be done, for example, to replace a bad transceiver and/or antennas, for maintenance, for upgrading and/or to change the band of the RF module **100**. The band may be an L-band, Ku-band, X-band, Ka-band and/or any other band. Alternatively, the transceiver may be replaced without replacing the antenna assembly.

[0052] Cables **330**, such as coaxial cables, may be used to communicably connect each antenna with the front end module and/or other modules. In some embodiments, to remove the antennas, these connectors may be disconnected. In some embodiments, the RF module may be coupled with the back end module using twisted pair. Alternatively, the interconnection of signals between the antenna and transceiver assembly may be made through direct connections affixed to the respective housing such as blind-mating connector pairs or sets.

[0053] Patch antenna configurations can comprise single or multiple patch arrangements with driven and parasitic elements. Patch elements may be aperture coupled, edge driven or probe driven. Antenna elements can be single polarization with linear or circular polarization. In another embodiment, a dual-circular polarization patch element having a driven patch and a parasitic patch where a quadrature (90°) hybrid circuit is incorporated into a first patch printed circuit board (PCB) assembly for enabling dual circular polarization states. The driven patch PCB assembly is attached to a housing **325**. A parasitic patch is carried by a substrate in the preferred embodiment and the substrate is supported above the driven patch by a dielectric spacer.

[0054] The transceiver may be attached to a vehicle, for example, such as a military vehicle, a boat, an airplane, a helicopter, a car, a jeep, a truck, a Humvee (or HMMWV), a transporter, a tank, etc., according to some embodiments. In other embodiments, the RF module **100** may be used in military applications. There could be different RF modules for different applications, which may be coupled with the same backend or modem assembly. For example, there could be a 3, 4, or 5-patch embodiment for aircraft and a 7-patch embodiment for vehicles that both use the same transceiver assemblies. An RF module **100** comprised of a 5-patch embodiment having 4 side-oriented patches and one upward oriented patch can be operated in a similar manner as in the 7-patch embodiment. Any number of patch antennas may be used, for example, 1, 2, 3, 4, 5, 6, 7, 8, 9, 10, 11, 12, 13, or more patch antennas may be used.

[0055] In another embodiment, the present disclosure provides for a transceiver comprising more than one antenna group. The antenna groups may include at least one antenna and each group may be configured to transmit and receive a signal using a single antenna within the antenna group. For example, the transceiver may include a first antenna group with three antennas, a second antenna group with three antennas, and a third antenna group with the central antenna. Thus a group may switch between antennas and send a single signal from the antenna group. The transceiver may also provide 360° azimuth coverage. The transceiver may also provide at least about 5° to about 90° elevation coverage. The elevation coverage provided by the transceiver may range from about 6°, 7°, 8°, 9°, 10°, 15°, 20°, 25°, or 30° up to about 90°.

[0056] Antennas arrayed in such a configuration may provide, for example, 360° azimuth coverage. Moreover, the antennas may provide, for example, 5° to 90° elevation coverage. As another example, the antennas may provide greater than 6°, 7°, 8°, 9°, 10°, 15°, 20°, 25°, or 30° elevation coverage. Other embodiments of the invention may provide for example, three, four, five, seven, eight, or nine patch antennas arrayed around a central antenna. Antennas can be grouped in sub-arrays where the signal processing within the sub-array group can be different from the processing among the groups. For example, the elements within the group can be phase scanned or steered whereas the groups are subsequently switched and/or combined through signal processing. Those skilled in the art will recognize further configurations of other combinations of antennas and various signal processing configurations may be included.

[0057] As shown in FIG. **10** the hardware may provide three independent RF channels. Each path may be coupled with an antenna or an antenna group. In some embodiments, the second and third groups may provide an RF channel from every other antenna patch. In another embodiment, antenna time share may be employed to determine the best line of sight to a satellite or other communication point. Moreover, in some embodiments, the signals may comprise spread spectrum signals.

[0058] The multiple paths may also be used to combine the beams in a MIMO configuration or in an array for beamforming applications. Each individual antenna patch may also beam-form. The beams may also be combined to provide signal diversity. The antennas may also transmit at various different polarizations as well as receive at different polarizations. In yet another embodiment, the antennas may be configured to provide beam forming for one application and the switch between beams for a second application.

[0059] FIG. **4** shows a block diagram showing an RF module **410** and a back end module **420** according to another embodiment. As shown, the RF module **410**, in some embodiments, includes one or more antennas **416**, front end processing module **414**, and a band converter **412**. The backend module **420**, for example, may include a packet switching interface **422** and a digital processor **424**. The RF module **410**, in various embodiments, may include analog-to-digital converters, digital-to-analog converters, amplifiers, low noise

amplifiers, up conversion, down conversion, generation of mixing frequency, and/or oscillation (see FIG. **16**). The backend module may include IP protocol functions, tracking loops, power conditioning, modulation, demodulation, IP header compression, encryption and/or decryption. In yet other embodiments, the RF module **410** may largely perform analog functions and the backend module **420** may largely perform digital functions.

[0060] FIG. **5** shows a block diagram of an antenna module **416** with a plurality of antennas **505** according to one embodiment. In this embodiment, seven antennas **505** are shown with seven branch line couplers **510**. The branch line couplers **510** allow for polarization selectivity. The antennas **505** for each antenna module **416** may be selected based on the frequency band of the RF module **410**. Thus, if an RF module was configured to communicate using the Ku band, then the antennas will be selected to operate within the Ku band. Thus the antennas **505** are matched with the up and down converters. Various other bands may be used.

[0061] FIG. **6**A shows a block diagram of an RF module **414** according to one embodiment. The RF module may be coupled with the antenna module **416**. As shown the RF module **414** may include duplexers **603** that provide duplexing functions for the transmit and receive signals. In some embodiments, a nonreflective polarization switch **602**, for example, may be used to switch between left-hand and right-hand cross polarized signals to the antenna module. On the receive line a filter **604**, such as a low pass filter, may be used. A switch **605** may be used to select between antennas within an antenna group for receiving a single. For example, the embodiment shown in the figure includes 3 antenna groups, from bottom to top Group A, Group B and Group C. In this example, Group C includes a single antenna, such as, a central antenna. Group A and Group B, for example, each include three antennas. Any number of groups with any number of antennas may be used. Various filters **655**, **665** and an amplifier **660** may also be included. Each receive line may also include various amplifiers **635**, **620**, filters **615**, **625** and/or limiters **630** as shown in FIG. **6**. Various other components may be included.

[0062] FIG. **6**B is similar to FIG. **6**A, except the transmit duplexing occurs on a group by group basis instead of an antenna by antenna basis. Accordingly, a single group may be selected to transmit a signal. Thus, a switch **650** is included that switches the transmit signal between the three groups.

[0063] FIG. **7**A shows a block diagram of receiver components of another RF front end module **414** according to one embodiment. In this embodiment, each line from an antenna includes an amplifier **705**. Antenna groups A and B also include a three way switch **710** that selects from the seven antennas or a group of antennas or an antenna within a specific group. An antenna group may include any number of antennas. Therefore, the switch **710**, in some embodiments, may include any number of ports. Various filters **715** and **730**, for example, band pass filters, may be included along with limiters **720** and amplifiers **725**. Those skilled in the art will recognize that other processes and/or components may be used within the RF front end module **414**. Moreover, various processes and/or components may be removed.

[0064] FIG. **7**B shows a block diagram of transmitter components of another RF front end module **414** according to one embodiment. The transmitter components may include for example, filters **655** and **665**, amplifiers **660**, and/or a switch **750** with various output ports that lead toward the antenna. Thus, during transmission, the best antenna may be used for transmission.

[0065] FIG. **8** shows a block diagram of receiver components of a band converter module **412** according to one embodiment. In some embodiments, this portion of the band converter provides down conversion for the receive line and up conversion for the transmit line. In some embodiments, the band converter module **412** provides down conversion of the signal received from the RF front end **414** and provides digital signal to a backend module **420**. In other embodiments, the band converter module **412** provides a digital-to-analog processing and up conversion for digital signals received from the back end module. Depending on the band selected for communication with a satellite, the band convert module **412** up converts and/or down converts a signal with the band of the RF module. Various amplifiers **825**, **830**, **840**, and **845**, limiters **805** and **815**, rectifiers **855**, and filters **820** and **850** may be used. Moreover, analog-to-digital converters **860** convert the analog signal into a digital format. Mixers **810** are included to decode and/or demodulate the analog data from the carrier signal. The carrier signal is provided by the synthesizer **880**. Various other optional components are shown coupled with the synthesizer **880**, such as a power divider **865**, a filter(s) **870**, amplifier(s) **875**, etc.

[0066] FIG. **9** shows a block diagram of transmitter components of a band converter module **412** according to one embodiment. A digital-to-analog converter (DAC) **905** is shown along with a modulator **915**, filters **930** and **910**, amplifiers **925** and **945**, a variable gain amplifier **935**, and an isolation circuit **950**, and an associated DAC **940**. Digital data may be received at the DAC **905**. A modulator may then up convert the analog signal to the band being used within the RF module. The carrier signal is provided by the synthesizer **920**. While various components are shown within this embodiment of a band converter, in other embodiments, various other components or combinations may be used. Moreover, in other embodiments, components may be left our or rearranged.

[0067] FIG. **10** shows a block diagram showing reception of a signal using multiple antennas according to one embodiment. As shown, seven antennas **416** are grouped within three groups. Group 1 includes antenna **416-1**. Group 2 includes antennas **416-2**, **416-3**, and **416-4**. Group 3 includes antennas **416-5**, **416-6** and **416-7**. Groups 2 and 3 include a switch **1010** that selects which antennas are being used to transmit or receive data. Each group also includes a duplexer **1020** that may be tied to the specific operational band of the RF module. From the duplexer three receive channels are provided. Only one transmit channel is provided from a transmission switch **1030**. Thus, using the three receive channels, the system may detect the best antenna to communicate with a satellite. This best antenna may then be used to transmit the data. On the receive side, data may be received by combining the signal from three antennas, or looking only at the signal from the best antenna. As the transceiver moves and/or rotates, the best antenna may change.

[0068] FIG. **11** shows the reception side of an RF module with an antenna module **416**, front end module **414**, and a band conversion module **412** according to one embodiment. The antenna module **416** includes one or more antennas **505**. In this embodiment, a single antenna **505** is used. The front end module **414**, includes two filters **1105**, **1115** and an amplifier **1110**. The band conversion module **416** includes a limiter **1115**, and a mixer **1120** that may decode the analog

data from the carrier signal. The carrier signal is provided by the synthesizer **1150**. Various filters **1140** and **1125** may also be used, as well as amplifiers **1130**, **1145**. Finally, the band conversion module also includes an analog-to-digital converter **1135** that converts the analog data into digital data.

[0069] FIG. **12** shows the reception side of an RF module for receiving data with an antenna module **416**, front end module **414**, and a band conversion module **412** according to one embodiment. The antenna module **416** according to this embodiment includes two antennas and provides two receive channels to a back end module.

[0070] FIG. **13** shows the reception side of an RF module for receiving data with an antenna module **416**, front end module **414**, and a band conversion module **412** according to one embodiment. The antenna module **416** includes three antennas and the front end module **414** includes a switch that selects one of two antennas for transmission and/or reception. In some embodiments, the back end module controls the functionality of the switch, deciding which antenna to transmit and/or receive data. A second transmission switch may also be included that selects between all three antennas for data transmission.

[0071] FIG. **14** shows the transmit side of an RF module for transmitting data with an antenna module **416**, front end module **414**, and a band conversion module **412** according to one embodiment. Three antennas **505** are shown in the antenna module **416**. The front end module **414** includes a switch **1450** that selects which antenna **505** the data will be transmitted from. A filter **1445** and an amplifier **1440** may also be included in the front end module **414**. The band conversion module **412** includes a digital-to-analog converter (DAC) **1405** and a modulator **1415** that combines a carrier signal with the data signal. The carrier signal may be provided by a synthesizer **1420**. Various filters **1430**, **1435**, **1410** may be included, as well as an amplifier **1425**.

[0072] FIG. **15** shows another block diagram of an RF module **410** with an antenna module **416**, front end module **414**, and a band conversion module **412** according to one embodiment. The antenna module **416** includes one or more antennas and is in communication with the front end module **414**. Analog transmit and receive data is passed between the two modules on one channel. The front end module **414** includes duplexers **1505**, amplifiers **1510** and an antenna selection module **1515**. The front end module, in some embodiments, may combine and/or separate transmit and receive signals, provide signal amplification, and/or provide antenna selection. The front end module **414** sends and receives analog receive and transmit data with the band conversion module **412** as well as receives regulated power therefrom. The band conversion module **412** includes, for example, a power regulation module **1535**, a gyro **1540** or gps, power amplifiers **1525**, an RF transmit module **1530**, a single or multi channel RF receive module **1520**, and/or system reference oscillator or clock **1550**. The band conversion module, in some embodiments, may provide up and down conversion functions, digital-to-analog conversions, analog-to-digital conversions, power amplification, and/or power regulation. The band conversion module **412**, in some embodiments, receives and transmits digital data with the back end module, receives unregulated power and/or digital control signals. While components and/or modules are shown as divided between various modules, these components and/or modules may be in the same module or in different modules from what is shown here.

[0073] FIG. **16** shows a block diagram showing examples of components in an RF module **1605** and a back end module **1650** according to various embodiments. The RF module **1605**, for example, may include any or all of the following in any combination. Components such as, for example, low noise amplifiers **1612**, antennas **1618**, duplexers **1620**, filters **1636**, multiplexers **1640**, switches **1638**, clocks **1624**, gyroscopes **1626** and/or GPS devices **1646** may be included. Analog-to-digital (ADC) and digital-to-analog (DAC) modules **1614**, **1616** may be used to digitize and un-digitize data. Up and down conversion **1622**, **1642** may also occur within the RF module **1605**. Mixers **1632**, power control **1662**, phase oscillators **1634** and/or tracking loops **1630** may be included in some embodiments. In some embodiments, the gyro could be found within the back end module. In some embodiments, portions of the gyro and/or GPS circuitry may be located within the RF module **1605** and the back end module **1650**.

[0074] An IP protocol module **1660** may be included in the back end module **1650** to prepare digital data packets according to the IP protocol. Packetization **1664**, frame structure creation **1666** and/or IP header compression **1678** may also occur within the back end module **1650**. Decryption **1670** and/or encryption **1682** of data may also occur, in some embodiments, within the back end module. Digital modulation **1680** and demodulation **1668**, in some embodiments, may also occur within the back end module **1650**. Frequency control **1674** and/or tracking loops for finding and/or tracking satellites **1672**, in some embodiments, may also occur within the back end module. The back end module **165084 1684** may also provide regulated power **1684** as well as accesses to a network through a network interface card (NIC) **1686**.

[0075] FIG. **17** shows a block diagram of a signal tracking system according to one embodiment. The signal tracking system may include a plurality of antennas **505** that are used to track a satellite or satellites. The processor **1700** finds the best antenna for both transmission and reception of data from the satellite. A gyroscope **1705** and/or a GPS device **1710** may be used to aide in antenna tracking. The processor, in some embodiments, may be located within a back end module.

[0076] FIG. **18** shows a flowchart of a method for tracking a satellite using multiple antennas according to one embodiment. An antenna is selected from the group of available antennas at block **1805**. For example, the most recently used antenna may be chosen. As another example, a random antenna may be selected. In other embodiments, antenna groups may be selected rather than single antennas. Moreover, in some embodiments, three antenna groups may be receiving data. In such embodiments, an antenna within an antenna group is selected or a different antenna group may be selected. Turning back to FIG. **10**, for example, antenna **416-6** may be selected.

[0077] Returning to FIG. **18**, the system searches for a signal on the antenna at block **1810**. If no signal is found, as determined at block **1815**, then an adjacent antenna or another antenna group may be selected at block **1820**. For example, turning back to FIG. **10**, antenna **416-7** may then be selected. If a signal is found on the antenna, as determined at block **1815** of FIG. **18**, data may then be received using this antenna at block **1825**. Meanwhile, the system may monitor the signal strength of an adjacent antenna at block **1830** and determines if the adjacent antenna has a stronger signal at block **1830**. In some embodiments, the system monitors and compares the signal-to-noise ratio of the two signals. If the second signal is stronger, then the system switches to the adjacent antenna at

block **1840** and continues to receive data at block **1825**. An adjacent antenna may be an antenna within the same group or within a different group. Otherwise the system continues to receive data at block **1825**.

[0078] FIG. **19** shows another flowchart of a method for tracking satellites using multiple antennas and a gyroscopic element according to one embodiment. This flowchart is similar to the one shown in FIG. **18**. However, in this embodiment, a gyroscope or GPS may be used to determine which adjacent antenna to switch to. For example, if the transceiver is mounted to an automobile that is turning in a clockwise direction, a gyroscope may determine this turning motion, and direct the system to select the antenna in the counter-clockwise direction to track the satellite. Thus, at block **1920**, rotation information may be received from the gyroscope if the signal strength is not large enough as determined in block **1815**. An adjacent antenna is selected based on this rotation information at block **1925**. Similarly, at block **1940** the gyro may aid in determining an adjacent antenna, which may be selected for monitoring at block **1945**.

[0079] FIG. **20** shows another flowchart of a method for tracking satellites using at least three antenna groups and a gyroscopic element according to one embodiment. In this embodiment, three antenna groups are monitored: group A, group B and group C. Groups A and B find the best signal within their group in a manner similar to that shown in FIG. **19**. Group C, on the other hand, is a single antenna group and data is received directly from the signal antenna. Data from the three groups may be combined at block **2030** after the best antennas are selected from groups A and B. The signals may be combined, for example, using maximal-ratio combining (MRC), adaptive interference cancellation (AIC), or any other diversity technique. Equal gain combining, switched combining and/or selection combining may also be used in other embodiments. In other embodiments, rather than combining the three signals, the strongest signal from the three groups may be selected. In another embodiment, the group C antenna may be a central antenna, and the group B and group A antennas may be radially located antennas. The groups may include, for example, even and odd antennas.

[0080] FIG. **21** shows a flowchart of a method for completing a soft transition from one antenna to another antenna according to one embodiment. Data is received at a first antenna at block **2105**. The signal from a second antenna is monitored at block **2110**. In some embodiments, the signal from the second antenna may occur in parallel with receiving data from the first antenna. The signal may be monitored to compare the signal strength, for example, between the first antenna and the second antenna in the same or different group. If the signal strength is greater in the second antenna, then the system may choose to switch to the second antenna.

[0081] At block **2115**, the phase difference between the data received from the first antenna and the second antenna may be determined. For example, the phase difference may be determined by monitoring known data strings in the data headers. This phase difference may then be subtracted from the signal received at the second antenna at block **2120**. This subtraction process may occur digitally, in some embodiments. The signal from the second antenna may then be received without a phase shift from the first signal received at the first antenna.

[0082] FIG. **22** shows a flowchart of a method for adjusting the phase of two received signals and combining the two signals. The two signals are received at blocks **2205** and **2210**. The phase difference between the two signals may be determined at block **2215** and the first and/or second signal may be shifted according to the phase difference at block **2220**. The signals may then be combined at block **2225**.

[0083] FIG. **23** shows an example of a data structure according to one embodiment. As described above, the phase difference between signals received on different antennas may be determined by monitoring known data streams in a header file. As shown, the data structure includes a header **2305** and a data section **2310**.

[0084] FIG. **24** shows another flowchart of a method for completing a soft transition from one antenna to another antenna according to one embodiment. This flow chart is similar to the one shown in FIG. **21**. In this embodiment, however, the data is not only received at the first antenna at block **2105**; the data is also written into data at block **2406**. The signal from a second antenna is monitored at block **2110**. At block **2115**, the phase difference between the data received from the first antenna and the second antenna may be determined. This phase difference may then be subtracted from the signal received from the second antenna at block **2120**. Similarly, data is received from the second antenna at block **2125** and is written into memory at block **2426**.

[0085] Embodiments of the present invention may also conform to MIL-STD-461E and MIL-STD-464 according to another embodiment of the invention. To resist lightning strikes, high-altitude electromagnetic pulses (HEMP) and other threats, the outer shell and enclosure are conductive to dissipate electricity around the circuitry. Moreover, the connecters may be HEMP protected connectors and may include protective covers that may be engaged when not in use. The various components of the antenna assembly share a common ground; for example, the patch antennas, the RF antenna element, the radome **105**, and/or the antenna assembly are DC grounded. The joints between patches may also provide conductive paths to ground. The Radome **105** may also provide RF shielding; for example, using the patch grounding pins. The Radome **105** and transceiver assembly, for example, may be grounded to a vehicle, for example, using an exterior lug or lugs. Moreover, the RF shielded bottom cover may also provide protection from lightening and HEMP.

[0086] Implementation of the techniques, blocks, steps and means described above may be done in various ways. For example, these techniques, blocks, steps and means may be implemented in hardware, software, or a combination thereof. For a hardware implementation, the processing units may be implemented within one or more application specific integrated circuits (ASICs), digital signal processors (DSPs), digital signal processing devices (DSPDs), programmable logic devices (PLDs), field programmable gate arrays (FPGAs), processors, controllers, micro-controllers, microprocessors, other electronic units designed to perform the functions described above and/or a combination thereof.

[0087] While the principles of the disclosure have been described above in connection with specific apparatuses and methods, it is to be clearly understood that this description is made only by way of example and not as limitation on the scope of the disclosure.

[0088] The attached appendix shows various exemplary embodiments of the invention in the form of a design review presentation. The appendix is by no means meant to be limiting. Rather, the material disclosed in the appendix is meant as exemplary only and to illustrate various embodiments of the invention.

What is claimed is:

1. A method comprising:

receiving a first packetized digital data stream, wherein the first packetized digital data stream is received from a satellite using a first antenna, and wherein the first packetized digital data stream includes a plurality of packets comprising a header and data;

providing the data from the first packetized digital data stream;

monitoring a second packetized digital data stream, wherein the second packetized digital data stream is received from the satellite using a second antenna, and wherein the second packetized digital data stream includes a plurality of packets, each packet comprising a header and data;

determining the phase difference between the first packetized digital data stream and the second packetized digital data stream;

subtracting the phase difference to the second packetized digital data stream; and

providing the data from the second packetized digital data stream.

2. The method according to claim **1**, wherein the determining the phase difference determines the phase difference based on the packet headers of the two data streams.

3. The method according to claim **1**, further comprising receiving an indication that the data from the second packetized digital data stream should be received and written into memory.

4. The method according to claim **1**, further comprising determining that the data from the second packetized digital data stream should be received and written into memory.

5. The method according to claim **1**, further comprising determining that the signal-to-noise ratio of the second packetized digital data stream is greater than the signal-to-noise ration of the first packetized digital data stream.

6. The method according to claim **1**, wherein the providing includes providing the packetized digital data stream to user through a local network.

7. The method according to claim **1**, wherein the providing includes writing the packetized digital data stream to memory.

8. A method comprising:

receiving a first packetized digital data stream, wherein the first packetized digital data stream is received from a satellite using a first antenna, and wherein the first packetized digital data stream includes a plurality of packets, each packet comprising a header and data;

receiving a second packetized digital data stream, wherein the second packetized digital data stream is received from the satellite using a second antenna, and wherein the second packetized digital data stream includes a plurality of packets, each packet comprising a header and data;

determining the phase difference between the first packetized digital data stream and the second packetized digital data stream;

subtracting the phase difference to the second packetized digital data stream; and

combining the data from the second packetized digital data stream and the first packetized digital data stream.

9. The method according to claim **8**, wherein the determining the phase difference determines the phase difference based on the packet headers of the two data streams.

10. The method according to claim **8**, wherein the combining combines the data streams using maximum ratio combining.

11. The method according to claim **8**, wherein the combining combines the data streams based on the relative strength of each data stream.

12. A satellite transceiver comprising:

a plurality of antennas, wherein at least a subset of the plurality of antennas are arranged around a central location, wherein the azimuth coverage of the plurality of antennas comprises at least about 360°, and wherein the elevation coverage of each antenna comprises between about 5° and about 90°;

a processor coupled with the plurality of antennas, wherein the processor selects at least one antenna from the plurality of antennas for communication with a satellite; and

memory configured to store processor instructions and data, the processor instructions including:

instructions for receiving a first packetized digital data stream, wherein the first packetized digital data stream is received from a satellite using a first antenna, and wherein the first packetized digital data stream includes a plurality of packets, each packet comprising a header and data;

instructions for writing the data from the first packetized digital data stream into memory;

instructions for monitoring a second packetized digital data stream, wherein the second packetized digital data stream is received from the satellite using a second antenna, and wherein the second packetized digital data stream includes a plurality of packets, each packet comprising a header and data;

instructions for determining the phase difference between the first packetized digital data stream and the second packetized digital data stream;

instructions for subtracting the phase difference to the second packetized digital data stream; and

instructions for writing the data from the second packetized digital data stream into memory.

* * * * *