Feb. 10, 1970 C. M. SKINNER 3,494,559

SNOW MAKING SYSTEM

Filed Oct. 31, 1967 2 Sheets-Sheet 1

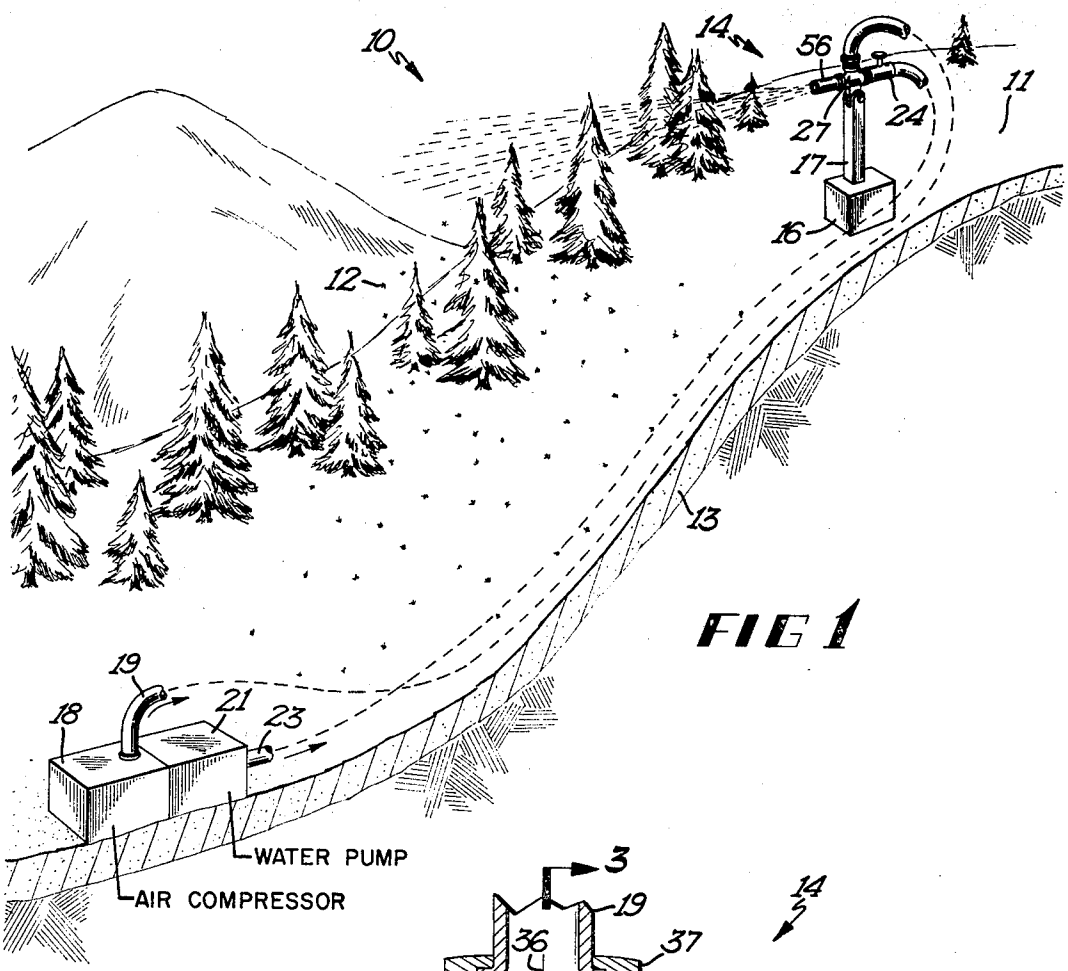

FIG 1

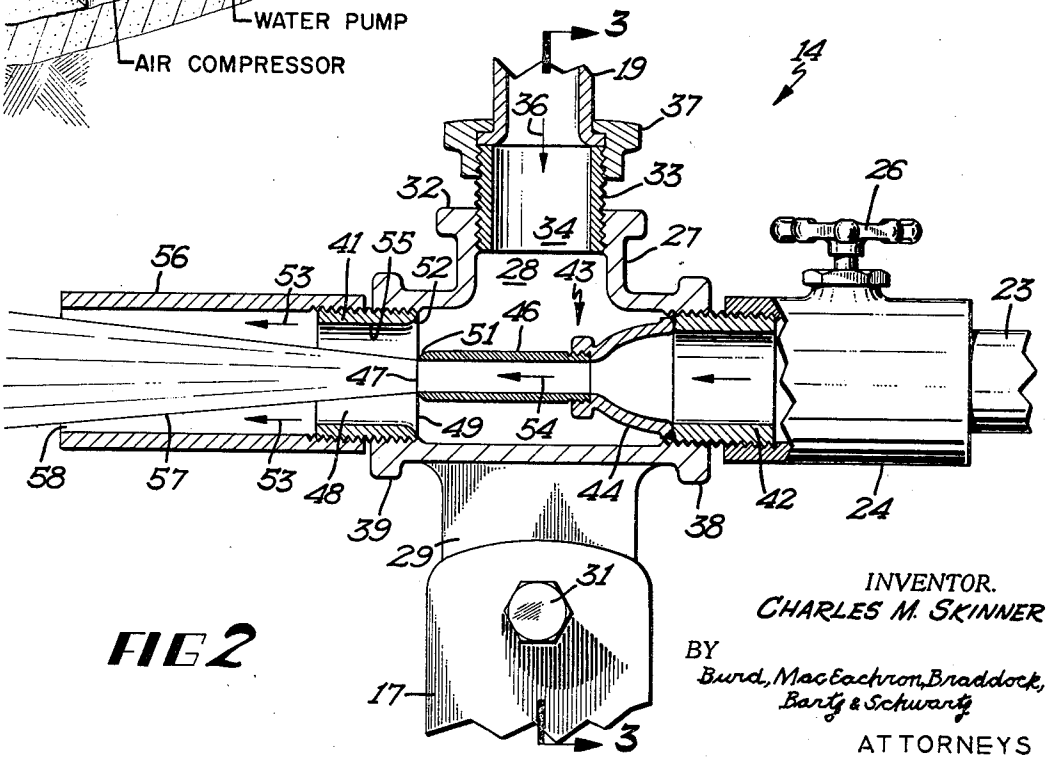

FIG 2

INVENTOR.
CHARLES M. SKINNER

BY
Burd, MacEachron, Braddock, Barty & Schwartz
ATTORNEYS

SNOW MAKING SYSTEM

Filed Oct. 31, 1967 2 Sheets-Sheet 2

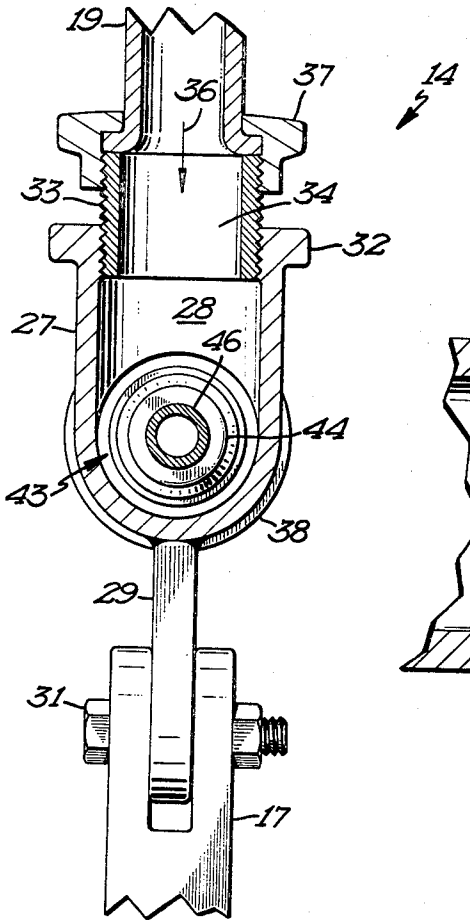

FIG 3

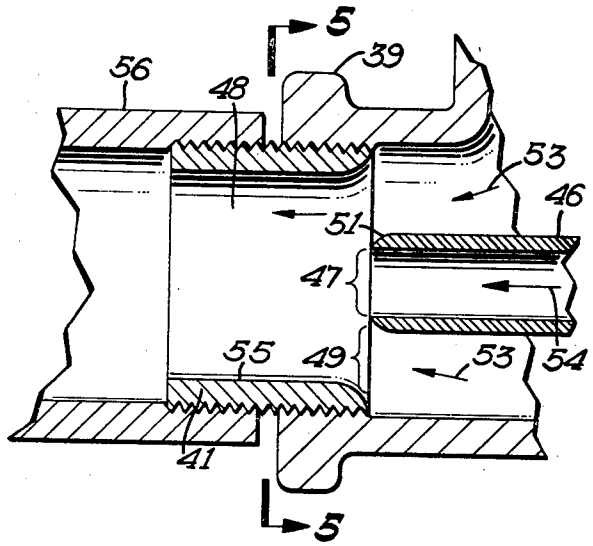

FIG 4

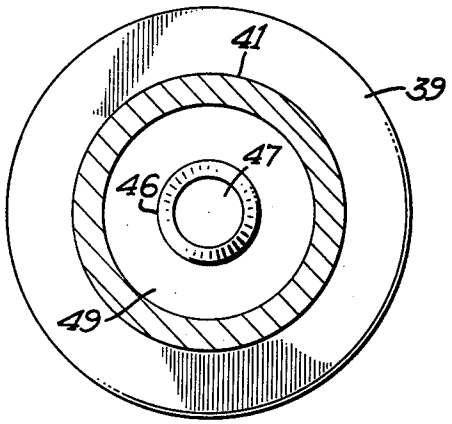

FIG 5

INVENTOR.
CHARLES M. SKINNER
BY
Burd, MacEachron, Braddock, Barty & Schwartz
ATTORNEYS

United States Patent Office

3,494,559
Patented Feb. 10, 1970

1

3,494,559

SNOW MAKING SYSTEM

Charles M. Skinner, Box 416,
Grand Rapids, Minn. 55744

Filed Oct. 31, 1967, Ser. No. 679,396
Int. Cl. F25c *3/04;* A63c *19/10;* F01c
U.S. Cl. 239—2 19 Claims

ABSTRACT OF THE DISCLOSURE

An apparatus and method for making snow by concurrently discharging compressed air and water under pressure from a snow gun into the atmosphere. The snow gun has a T-pipe coupling with a chamber for receiving air from a flexible hose connected to the top of the coupling. A water discharge nozzle projects through the coupling and terminates at a discharge aperture. A continuous stream of water under pressure is directed through the discharge aperture into the atmosphere simultaneously with a continuous cylindrical sheath of compressed air. The sheath of air surrounds the stream of discharged water whereby the concurrent and progressive expansion of the air cools and atomizes the water which forms particulate snow particles in the atmosphere. A tubular pipe attached to the coupling in alignment with the discharge aperture confiines the cylindrical sheath of air around the stream of water.

BACKGROUND OF INVENTION

Snow making machines and methods have been used to cover ski slopes and trails with a base layer of snow and a coating of lighter fine or powdered snow to establish usable skiing areas when normal weather conditions do not produce sufficient or desirable snow. Machines that use a combination of compressed air and water have numerous operational problems that reduce the efficiency of snow making and at times prohibit the making of snow. The prior art machines are susceptible to the accumulation and freezing of water in the compressed air lines and the plugging of the nozzles of th esnow guns. These snow guns mix atomized water and compressed air within the gun prior to the discharge opening communicating with the atmosphere. These guns must be used at a temperature below 27° F. to make snow. Examples of the prior art snow making machines are disclosed in U.S. Patents Nos. 2,571, and 2,676,471.

The snow making system of the present invention has a snow gun operative to concurrently and progressively mix compressed air and water externally of the gun to atomize the water to provide particulate bases or nuclei for snow particles. Both the compressed air line and snow gun are not susceptible to freezing. The snow gun is portable and has a large capacity to make snow effectively in varying atmospheric temperature and humidity conditions.

SUMMARY OF INVENTION

The invention relates to an apparatus and method for making snow. The apparatus has a housing forming a chamber for receiving a supply of gas under pressure. The housing has a discharge aperture forming an egress passage from the chamber to the atmosphere. Mounted on the housing is a nozzle means having a discharge opening located in a central area of the discharge aperture for directing a stream of water and under pressure through the discharge aperture into the atmosphere. Simultaneously with the discharge of the water a continuous envelope or sheath of gas flows through the aperture around the stream of discharge water to concurrently and progressively expand the gas so as to cool and atomize the water thereby forming particulate snow particles. The envelope of compressed gas about the water directs the water so that the snow is formed over a large area.

2

The method of making and spreading snow includes the step of directing the gas under pressure into a chamber having a discharge aperture. Simultaneously with the introduction of gas into the chamber, water under pressure is discharged into the central area of the discharge aperture outwardly along the axis of the discharge aperture into the atmosphere. The gas in the chamber flows outwardly through the aperture around the discharged water whereby a portion of the gas is initially mixed with the water at the discharge aperture to cool and atomize the water. The remaining gas and water is progresively mixed and expanded as the gas and water moves away from the discharge aperture whereby the water is progressively atomized and converted into snow-like particles in the atmosphere.

IN THE DRAWINGS

FIGURE 1 is a perspective view of the snow making system of the invention on a ski slope;

FIGURE 2 is an enlarged longitudinal sectional view of the snow gun of the snow making system of FIGURE 1;

FIGURE 3 is a sectional view taken along the line 3—3 of FIGURE 2;

FIGURE 4 is an enlarged sectional view of the discharge end of the nozzle and discharge aperture of the snow gun; and

FIGURE 5 is a sectional view taken along the line 5—5 of FIGURE 4.

Referring to the drawings, there is shown in FIGURE 1 the snow making system of the invention indicated generally at **10** located on a ski trail or slope **11**. Snow making system **10** is used to form snow-like particles **12** from concurrent and progressive expansion of co-mingled compressed air and water under pressure to form a snow packed base **13** and subsequently cover the base with light, fine or powdered snow providing the ski slope with optimum snow conditions for skiing.

Snow making system **10** comprises a snow gun indicated generally at **14** carried on a movable support **16** having an upright post **17**. The snow gun **14** is supported so that it can be moved along the ski slope and transported to other ski trails. Fixed supports can be provided along the ski slopes for mounting the snow gun at an elevation above the ground.

Gas, as air, under pressure is supplied to snow gun **14** by an air compressor **18** connected to an air line or large flexible hose **19** leading from compressor **18** to the top of the snow gun **14**. Air compressor **18** located at the bottom of the slope can be a relatively large pump driven by an engine to supply a large quantity of air under pressure to the snow gun. In addition, the compressor **18** may supply air to additional snow guns placed in different locations along the slope. The snow gun is supplied with water under pressure by the use of a pump **21** or similar water supply. The pump **21** discharges the water under pressure into a water line or large flexible hose **23** extended upwardly along the slope to the snow gun **14**. The lines **19** and **23** are portable and relatively large diameter hoses capable of providing the snow gun with large amounts of water and air and to permit the drainage of the lines to prevent the accumulation of ice particles in the snow gun and lines. The use of large flexible hoses and movable snow guns provides the snow making system with the capacity to make large amounts of snow in a relatively short amount of time and flexibility to move the snow guns as required by the slope.

In addition to the compressed air and water, a third substance, element or chemical can be introduced into either or both the air or water hoses to provide a seeding base or nuclei around which the snow particle forms. The third element may be silver iodide.

Water line **23** is connected to an adjustable valve **24** mounted on the snow gun **14**. The valve **24** has a knob or hand wheel **26** used to adjust or regulate the flow of water into the snow gun. This adjustment is necessary to account for the differences in weather conditions and air and water pressures so that an optimum snow forming operation can be achieved.

Referring to FIGURE 2, the snow gun **14** comprises a body or housing **27** having a chamber **28**. The body **27** is in the shape of a straight T-pipe coupling having axially aligned openings and a top opening in communication with the chember **28**. Secured to the bottom of body **27** is a downwardly projected leg **29** cooperating with a fastening member **31**, as a bolt, to connect the body to the top of the post **17**. As shown in FIGURE 3, leg **29** extends between bifurcated upper ends of the post **17** with the fastener **31** projected through suitable holes in the post **17** and leg **29**. With the use of a single fastening means the angle of the snow gun relative to the ground can be adjusted as required by the inclination of the ski slope and the weather and wind conditions in the snow making area.

Returning to FIGURE 2, body **27** has an upright stub boss **32** carrying a short threaded nipple **33** having an inlet passage **34** open to the top of chamber **28**. The air flowing through the line **19** indicated by arrow **36** flows through the passage **34** into the top of chamber **28**. A threaded nut **37** cooperating with the end of line **19** is used to clamp the line onto the nipple **33** thereby releasably connecting the air line **19** to the top of the snow gun **14**. The air line is a relatively large diameter hose so as to prevent the accumulation of ice or other particles in the air line. By connecting the air line **19** to the top of the snow gun the reverse flow of water from the snow gun **14** through the air line **19** is eliminated.

The opposite ends of body **27** have axially aligned bosses **38** and **39** carrying short threaded nipples **42** and **41** respectively. A nozzle indicated generally at **43** is connected to the nipple **42** to carry the water under pressure through the chamber **28**. Nozzle **43** comprises a reducing coupling **44** secured onto the nipple **42**. The small end of coupling **44** carries a tubular member or pipe **46** extended through the housing to the mouth of the discharge aperture of the exit or discharge nipple **41**. The tubular member **46** terminates in a circular discharge opening **47** in the vicinity of the mouth of the discharge aperture **48** formed by the nipple **41**. As shown in FIGURE 5, the outer end or discharge end of the tubular member **46** is in the central area of the aperture **48** so that an annular passage **49** surrounds the nozzle discharge opening **47**.

As shown in FIGURE 4, the outer end of tubular member **46** has an inwardly curved or rounded edge **51** located in a substantially concentric relation with oppositely curved or rounded edge **52** on the inner end of nipple **41**. The rounded edges **51** and **52** provide for the smooth flow of air, indicated by arrow **53**, through the annular passage **49** by eliminating the turbulence and eddys which reduce the effective flow of air. The water under pressure indicated by arrow **54** flows through the nozzle and is discharge into an annular sheath or cylinder of moving compressed air flowing through a restricted or annular venturi type passage. The wall **55** of the nipple **41** forming the discharge aperture or passage **48** is cylinrical and smooth. The smallest restriction for the flow of air through the snow gun is at the point where the water is discharge into aperture **48**.

Threaded onto the outer end of exit nipple **41** is an elongated sleeve **56** which functions to confine the cylinder of high pressure air about the stream of water discharged from the nozzle. The cross sectional area of the linear passage of sleeve **56** is larger than the cross sectional area of the discharge aperture **48**. The pressure of the air restricts the water divergence pattern as it passes through the dicharge aperture **48** thereby increasing the distance that the water moves from the snow gun **17**. As shown in FIGURE 2, the divergence pattern **57** of the water passing through sleeve **56** forces the cylinder of air through a smaller annular space to progressively increase the velocity of the air until it moves through a discharge outlet **58** of the sleeve **56**. This confinement of the cylinder of compressed air about the stream of water cools the water and mixes portions of the air with the outer portions of the water so that when the water and air enter the atmosphere the water stream is cooled and atomized by the flowing and expanding stream of air to such a temperature that the atomized water is frozen to form snow-like particles in the atmosphere. The interaction of expanding air progressively atomizes the water and reduces the temperature of the water and air in the area of the atomized water to a point where snow-like particles are formed which precipitate onto the ski slope as shown by snow particles **12** in FIGURE 1.

The snow gun **14** can be made in various sizes depending on the desired snow making capacity of the area. The following detailed snow gun is given by way of example only. The housing **27** is a four inch T-pipe coupling connected to a two-inch ID air hose **19**. The valve **24** is connected to a two inch ID water hose. Pump **21** supplies water to the nozzle **43** at between 30 to 100 gallons per minute at 60 to 100 p.s.i. The nozzle **43** is located along the axis of the discharge aperture **48** and has a discharge opening of a diameter of one inch located centrally of a two inch diameter discharge aperture **48**. The annular width of the annular passage **49** is one half inch. The air is supplied by compressor **18** to the chamber **28** at the rate of between 900 to 1600 cubic feet per minute at a pressure of between 60 to 100 p.s.i. For optimum operation the pressure of water should be at least equal to the pressure of the air.

In terms of a method for making and spreading snow on a ski slope the invention comprises the provision of providing a supply of gas, as air under pressure and providing a supply of water under pressure. Both the gas and water are carried in separate lines **19** and **23** to a discharging snow gun **14**. The gas is directed under pressure into the top of a chamber **28** in the discharge gun having a discharge aperture **48**. The water is discharged under pressure into the center area of the discharge aperture **48** outwardly along the axis of the aperture into the atmosphere. The air in the chamber flows outwardly through the annular venturi type passage **49** around the stream of water where a portion of the air is mixed with water at the discharge aperture **48** to cool and atomize the water. The air is confined adjacent to the space around the moving stream of water by the sleeve **56** to delay the expansion of the air. As the air and water leave the sleeve **56** atmospheric pressure allows the water and air under pressure to progressively expand to atomize and cool the water as the water and air moves away from the discharge aperture. The water is progressively atomized, cooled and converted into snow-like particles in the atmosphere. With the use of a seeding substance, chemical or element in either the water or air, the snow particles will form in the atmosphere around a nuclei of seeding substance.

Valve **24** is used to regulate the flow of water through the nozzle **43** so that varying mixtures of air and water may be discharged through the aperture **48**. This regulation provides control of the snow making according to the weather conditions on the ski slope.

While there have been shown and described a snow making system having a preferred embodiment of the snow gun, it is to be understood that various changes, omissions and size relationships of parts and hoses may be made by those skilled in the art without departing from the spirit of the invention. For example, the sleeve **56** may be removed so that the discharge pattern **57** of the water may be more diverse providing the snow gun with a shorter and broader spread range. The invention is defined in the following claims.

The embodiments of the invention in which an exclusive property or privilege is claimed are defined as follows:

1. An apparatus for making snow comprising: a housing having a chamber for receiving gas under pressure and a discharge aperture affording an egress passage from the chamber to the atmosphere, a tubular extension secured to the housing in axial alignment with the discharge aperture, said tubular extension having a cross sectional area larger than the cross sectional area of the discharge aperture, nozzle means mounted on said housing, said nozzle means having a discharge opening located in the central area of the discharge aperture directing a stream of water under pressure through the discharge aperture into the atmosphere simultaneously with the flow of gas through the aperture around the stream of discharged water whereby the progressive expansion of the gas concurrently atomizes and cools the water creating particulate snow particles.

2. The apparatus of claim 1 wherein said housing has inlet means for directing the gas under pressure into the top of said chamber.

3. The apparatus of claim 1 wherein said nozzle means projects through said chamber in axial alignment with the discharge aperture.

4. The apparatus of claim 1 including valve means adjacent the housing for controlling the flow of water to the nozzle means.

5. The apparatus of claim 1 in combination with first means for supplying gas under pressure, large hose means connecting the first means to the housing, second means for supplying water under pressure to the nozzle means and large hose means connecting the second means to the nozzle means.

6. The apparatus of claim 1 wherein the discharge opening of the nozzle means is positioned in substantial alignment with the mouth end of the discharge aperture.

7. A method of making and spreading snow comprising: providing a supply of gas under pressure, providing a supply of water under pressure, directing the gas under pressure into a chamber having a discharge aperture, discharging the water under pressure into the center area of the discharge aperture outwardly along the axis of the discharge aperture into the atmosphere, said air in the chamber flowing outwardly through said aperture around said discharged water whereby a portion of the air is mixed with the water at the discharge aperture to cool and atomize the water, said mixing of air and water progressively continuing as the discharge water and air expands and moves away from the discharge aperture whereby the water is progressively atomized and converted into snow-like particles in the atmosphere.

8. The method of claim 7 wherein the gas under pressure is supplied to the top of said chamber.

9. The method of claim 7 wherein the gas discharged through the discharge opening is initially confined to a longitudinal space around the water moving from the discharge opening.

10. The method of claim 7 wherein the water pressure is at least equal to the gas pressure.

11. The method of claim 7 wherein the flow of water is regulated just prior to the discharge of the water into the center area of the discharge opening.

12. The method of claim 7 including introducing a seeding substance into either or both the water or air prior to the discharge of water into the discharge aperture and flow of air through the discharge aperture.

13. A method for making and spreading snow comprising: discharging water under pressure through a discharge aperture as a continuous liquid phase stream of water into the atmosphere, discharging air under pressure through a discharge aperture positioned annularly about said stream of water around and axially in the direction of said stream of water into the atmosphere, progressively and controllably expanding said air around said stream of water as said stream of air moves axially in the direction of flow of said stream of water, whereby said water stream is cooled and atomized by the flowing and expanding stream of air to such a temperature that said atomized water is frozen to form snow-like particles in the atmosphere.

14. An apparatus for making snow particles comprising: a housing having a chamber for receiving gas under pressure, a discharge aperture affording an egress passage from the chamber to the atmosphere, said discharge aperture being the smallest restriction for the flow of gas from the chamber to the atmosphere, nozzle means mounted on said housing, said nozzle means having a discharge opening smaller than the discharge aperture and located in the smallest and central area of, and in general transverse alignment with, the discharge aperture to direct a stream of water under pressure through the discharge aperture into the atmosphere simultaneously with the flow of gas through the aperture around the stream of discharged water whereby progressive expansion of the gas concurrently atomizes and cools the stream of water externally of the discharge aperture creating particulate snow particles.

15. The apparatus of claim 14 wherein: said nozzle means comprises a tubular member projected through said chamber, said tubular member having an axial discharge opening located in the central area of the discharge aperture for axially directing a stream of water under pressure through the discharge aperture into the atmosphere.

16. An apparatus for making snow particles comprising: a housing having a chamber for receiving gas under pressure, said housing having a discharge aperture affording an egress passage from the chamber to the atmosphere, said discharge aperture being the smallest restriction for the flow of gas from the chamber to the atmosphere, nozzle means associated with said housing, said nozzle means having a discharge opening located in general transverse alignment with the discharge aperture to axially direct a stream of water under pressure axially through the discharge aperture into the atmosphere simultaneously with the flow of gas through the aperture around the stream of water whereby progressive expansion of the gas concurrently atomizes and cools the stream of water externally of the discharge aperture creating particulate snow particles in the atmosphere.

17. The apparatus of claim 16 wherein: said housing has inlet means for directing the gas under pressure to the top of said chamber.

18. The apparatus of claim 16 wherein: said nozzle means projects through said chamber in axial alignment with the discharge aperture.

19. The apparatus of claim 16 including: valve means adjacent the housing for controlling the flow of water into the nozzle means.

References Cited

UNITED STATES PATENTS

1,612,457	12/1926	Marron	239—424
2,571,069	10/1951	Shearman.	
2,676,471	4/1954	Pierce	62—172
3,146,951	9/1964	Brown	239—399

FOREIGN PATENTS

210,243	1/1967	Sweden.
791,579	8/1968	Canada.

EVERETT W. KIRBY, Primary Examiner

U.S. Cl. X.R.

239—14, 434