Feb. 12, 1963 A. J. WHITE 3,077,339

YIELDABLE HIGHWAY GUARD

Filed Feb. 6, 1961

Fig. 1.

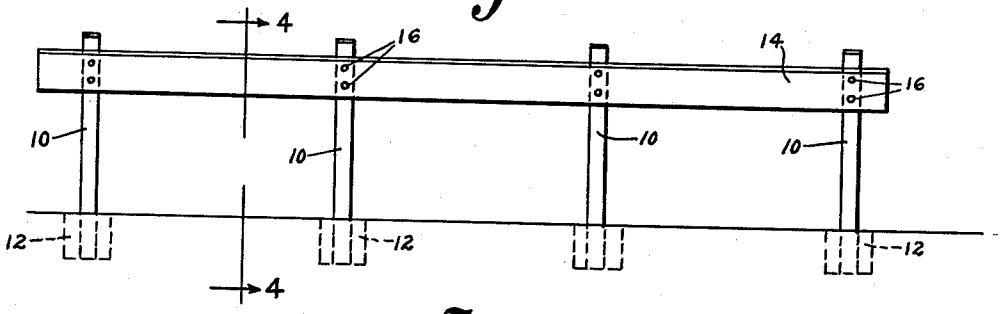

Fig. 2.

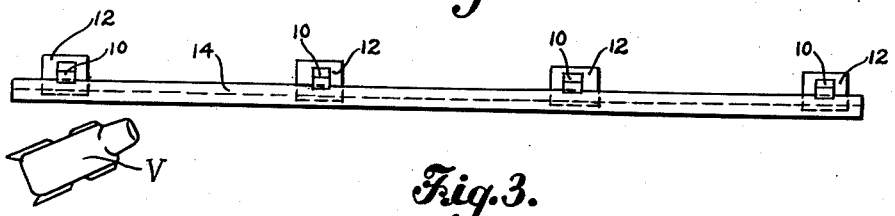

Fig. 3.

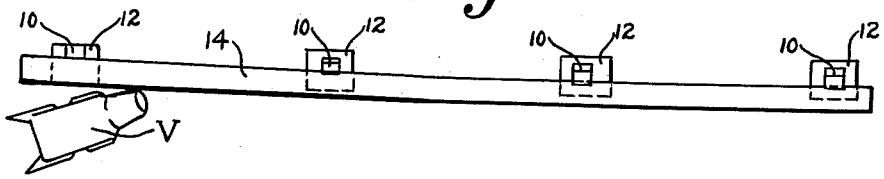

Fig. 4.

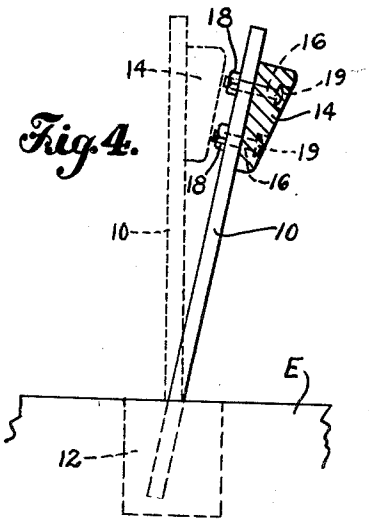

Fig. 5.

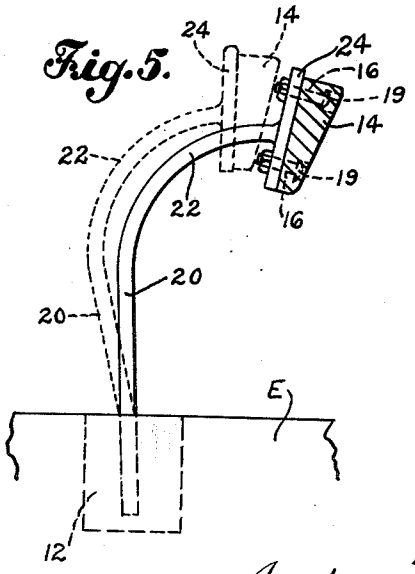

INVENTOR.
Andrew J. White
BY Harold E. Cole
Attorney

United States Patent Office 3,077,339
Patented Feb. 12, 1963

3,077,339

YIELDABLE HIGHWAY GUARD

Andrew J. White, Newmarket P.O., Lee, N.H.

Filed Feb. 6, 1961, Ser. No. 87,207
4 Claims. (Cl. 256—13.1)

This invention relates to safety apparatus having yielding supports for highways and the like.

One object of my invention is to provide safety apparatus at curves or turns along highways that will steadily retard the progress of the moving vehicle that is out of control and thus gradually absorb its energy.

Another object is to provide a guard rail attached to posts or supports, the latter being yieldable, so that the guard rail forms a movable cushion that gradually yields to thus provide directional control of a vehicle as its movement applies pressure against said guard rail progressively from one post to another.

A further object is to provide a guard rail that is so formed that it tends to restrain a moving vehicle from vaulting the rail.

A still further object is to provide such apparatus that has few parts thus satisfying the cost problem and using a minimum of space along a highway.

The foregoing and other objects, which will appear as the nature of the invention is better understood, may be accomplished by a construction, combination and arrangement, such as is disclosed by the drawing. The nature of the invention is such as to render it susceptible to various changes and modifications, and, therefore, I am not to be limited to the construction disclosed by the drawing nor to the particular parts described in the specification; but am entitled to all such changes therefrom as fall within the scope of my claims.

In the drawing:

FIG. 1 is a front elevational view of my safety apparatus.

FIG. 2 is a top plan view thereof, and showing a vehicle moving towards said apparatus.

FIG. 3 is a top plan view showing the vehicle in forceful contact with the guard rail of my apparatus, and showing the change brought about in the position of the posts or supports supporting said guard rail.

FIG. 4 is an enlarged sectional view taken on the line 4—4 of FIG. 1, the dash lines showing the position of the post following collision of a moving vehicle with the guard rail in front of that post.

FIG. 5 is an enlarged similar view to FIG. 4; but showing a modified post.

As illustrated, my safety apparatus has supports shown as posts **10** that are resilient, and may be made of a material such as spring steel. Lower end portions thereof are filmly fixed in concrete **12** poured in holes spaced apart that are dug in the earth E, thus firmly anchoring said posts **10**. These posts slant forwardly, toward the roadway, as shown.

A rail **14**, which may be of wood, is attached to said posts, extending laterally from one post to another. Said rail is held by bolts **16** and nuts **18** to said posts, the bolt heads **19** being inset as shown in said FIGS. 4 and 5.

Said rail **14** may be made of wood or metal and preferably increases in thickness in an upward direction as shown in said FIGS. 4 and 5 when in position of use; this flare or spread upwardly serves as a shoe to prevent a moving vehicle from vaulting a rail, since the latter increases the area of contact of the rail with a vehicle,

such as an automobile, as said posts **10** deflect. Said rail **14** is preferably positioned on the posts so that the lower edge of the rail is above the center of gravity of the vehicle, which center is, for instance, about 23 inches above the roadway, of most of the automobiles now in use.

When a vehicle V gets out of control, as indicated in in said FIGS. 2 and 3, it usually is moving somewhat sideways and in a general direction towards the right side of the road, where my safety apparatus will be located. It continues until it strikes said rail **14** causing a post **10** to deflect rearwardly as indicated in said FIG. 3, and also by the dash lines in said FIG. 4. The vehicle usually will continue along said rail **14** forcing the next adjoining post **10** to deflect rearwardly in a similar manner and this will be repeated as the vehicle moves against the rail.

The impact force of the vehicle as it moves along the rail steadily lessens. It immediately commences to decelerate upon first striking said rail and the deceleration continues rapidly so that when a few posts have been deflected the vehicle will usually be fully stopped or brought under control.

In said FIG. 5 I provide modified posts **20** each of which has a curved portion **22** above the part that extends into the earth, to provide greater resilience. In this construction the curved portion **22** normally positions said rail **14** in a forward position so that the posts **20** are set vertically in the earth. Said post **20** has an attaching head portion **24** at the upper extremity thereof to which said rail **14** is bolted as previously explained.

What I claim is:

1. Safety apparatus comprising a plurality of posts of resilient material spaced apart and a rail attached to and extending between said posts at upper portions thereof, said rails increasing in thickness in transverse section continuously from bottom to top in position of use and having a generally flat, front surface.

2. Safety apparatus comprising a plurality of posts each having an upper portion of resilient material, and being spaced apart, said upper portions curving continuously forward in position of use, and a rail extending between and attached to said posts at the front extremities of said curved portions and extending forwardly therefrom in position of use.

3. Safety apparatus comprising a plurality of posts spaced apart embodying a resilient portion spaced from the lower end thereof and curving continuously forward in position of use, and an attaching portion connected to and extending from the front extremity of each said post, and a rail attached to said attaching portions and extending forwardly therefrom in position of use.

4. Safety apparatus comprising a plurality of posts each having an upper portion of resilient material and being spaced apart, said upper portions curving forwardly in position of use in the form of a gooseneck, and a rail extending between and attached to said posts at the ends of said curved portions and extending forwardly therefrom in position of use, said rail increasing continuously in thickness in transverse section from bottom to top.

References Cited in the file of this patent

UNITED STATES PATENTS

2,101,176	Height	Dec. 7, 1937
2,136,415	Cornett	Nov. 15, 1938
2,163,809	Rauen	June 27, 1939