March 9, 1965 K. J. HARWOOD 3,172,563

PACKAGE OF PAPER TISSUES

Filed May 9, 1961 4 Sheets-Sheet 1

Fig. 2.

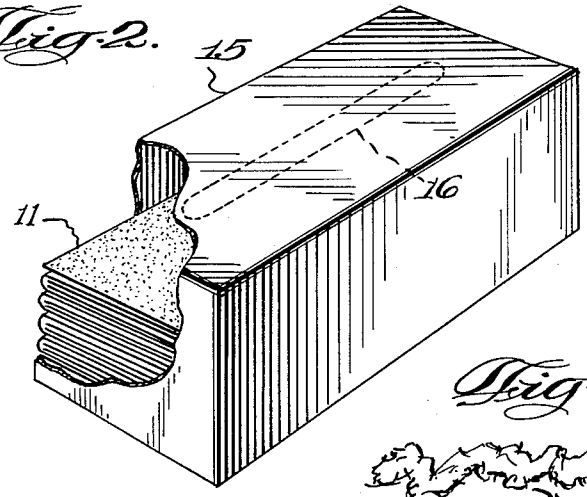

Fig. 3A.

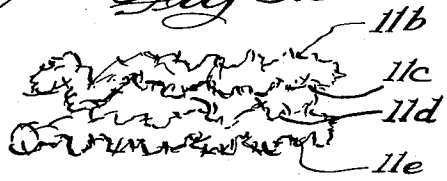

Fig. 1.

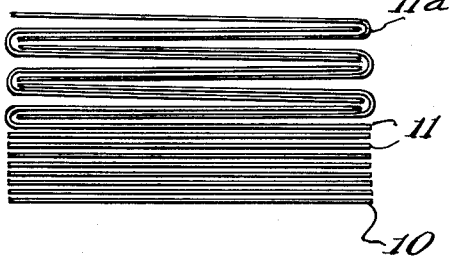

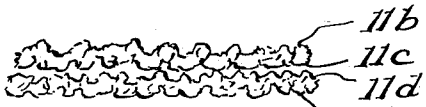

Fig. 3c.

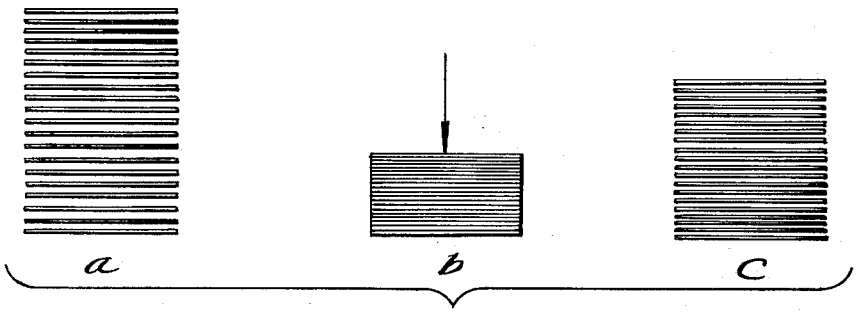

Fig. 3.

PACKAGE OF PAPER TISSUES

Filed May 9, 1961 4 Sheets-Sheet 2

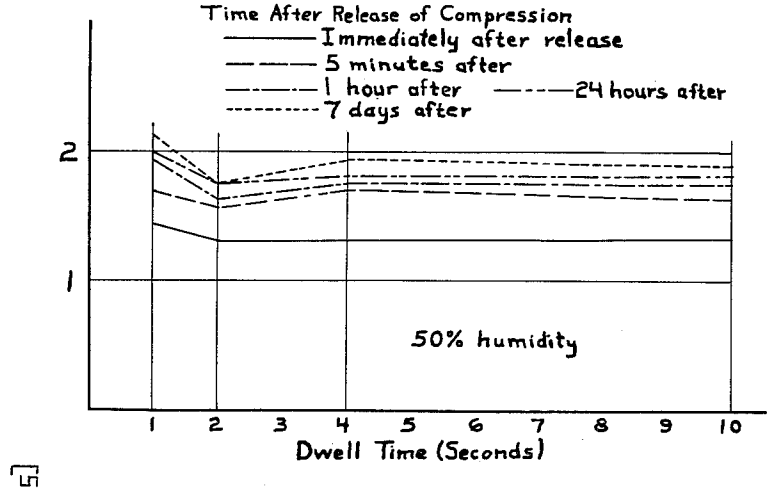

Fig. 4

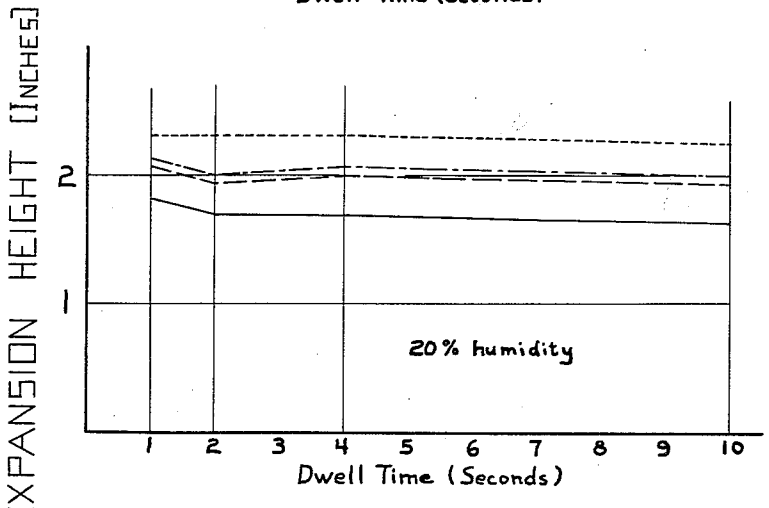

Fig. 5

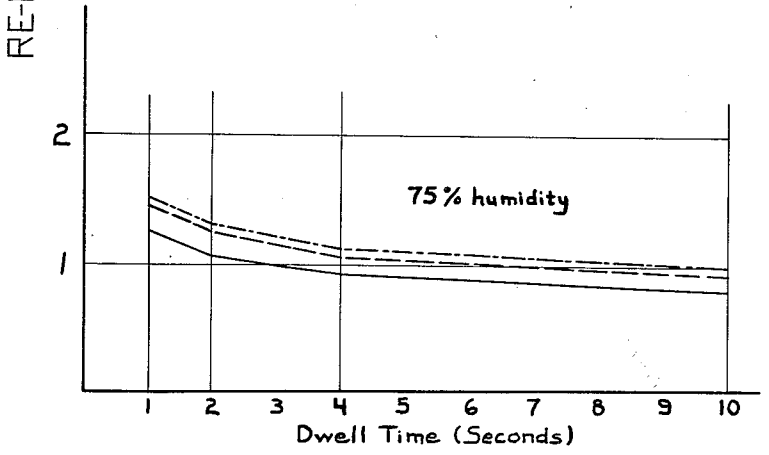

Fig. 6

March 9, 1965 K. J. HARWOOD 3,172,563

PACKAGE OF PAPER TISSUES

Filed May 9, 1961 4 Sheets-Sheet 3

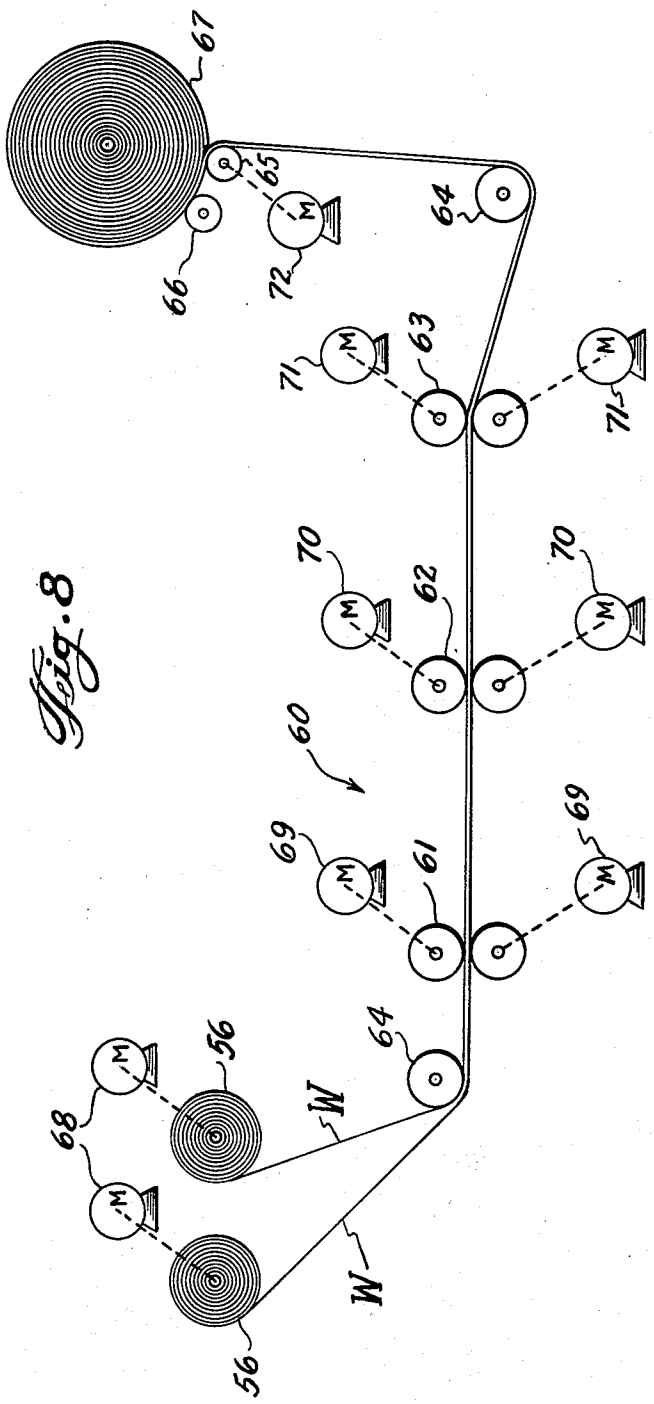

Fig. 8

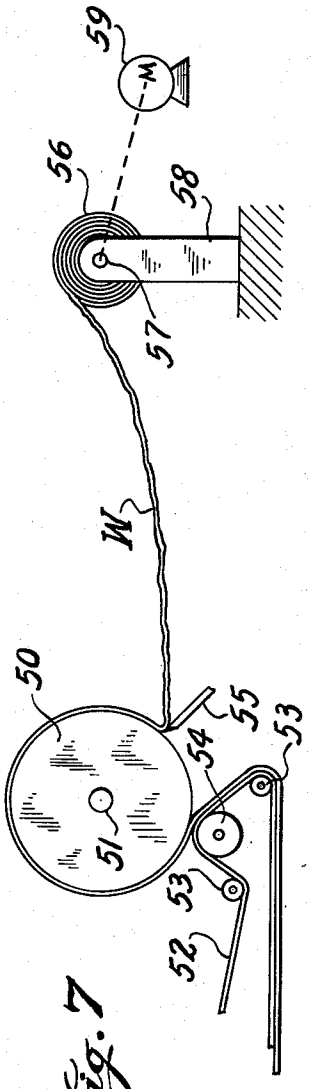

Fig. 7

March 9, 1965 K. J. HARWOOD 3,172,563

PACKAGE OF PAPER TISSUES

Filed May 9, 1961 4 Sheets-Sheet 4

Fig. 9A.

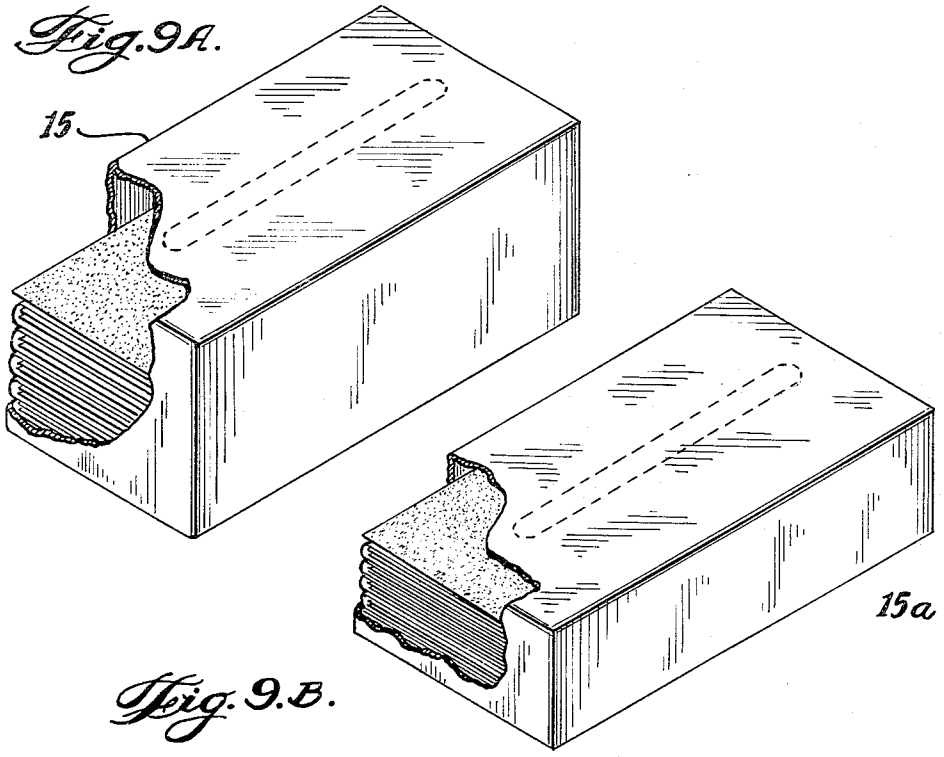

Fig. 9B.

Fig. 11

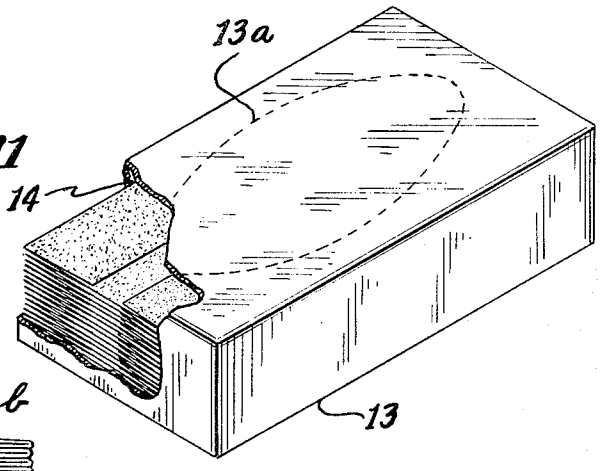

Fig. 10

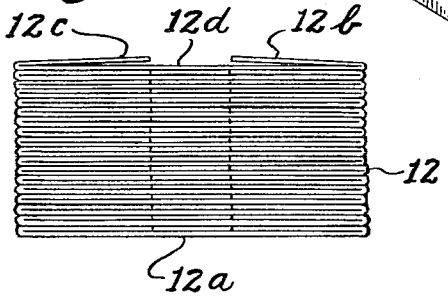

United States Patent Office

3,172,563
Patented Mar. 9, 1965

3,172,563

PACKAGE OF PAPER TISSUES

Kenneth J. Harwood, Neenah, Wis., assignor to Kimberly-Clark Corporation, Neenah, Wis., a corporation of Delaware

Filed May 9, 1961, Ser. No. 110,612
2 Claims. (Cl. 221—48)

This invention relates to a compressed stack of paper tissue sheets, a package of such sheets, and a method for forming such compressed stack and package. In a particular application, the invention relates to a compressed stack of paper facial tissue, a package of such tissue and the method for forming such stack and package.

This application is a continuation-in-part of my application, Serial No. 729,578, filed April 21, 1958, for "Manufacture of Cellulosic Products" (now abandoned).

The package of facial tissue has in recent years become a produce of worldwide renown and substantially universal acceptance, with consequent great commercial importance. These tissues comprise creped paper sheets having a drier basis weight (uncreped) of about six to ten pounds per ream (2880 sq. ft.), and more particularly of about 7½ or 7.6 pounds per 2880 sq. ft. (uncreped), and the sheets are folded in two plies so that each tissue is of double ply, and each tissue thus has a basis weight of double these values, particularly of about 15 lbs. per 2880 sq. ft. (uncreped). Ordinarily, the tissues as folded are arranged in a stack which is packaged in a paperboard dispensing carton. In one widely used form, the tissues are interfolded so that dispensing from the carton is automatic, the dispensing action of each tissue bringing the next successive tissue into dispensing position. A tissue dispensing slot is conventionally provided in the top of the carton through which individual tissues may be withdrawn, and the sides of the slot hold successive tissues in dispensing position extending above the carton and through the slot. In another form, the tissues are C-folded, with edge portions of each tissue being folded toward the middle but with a gap between the two edges. These are commonly packed in a carton having a substantially wider opening in the top of the carton, so that a person may reach into the carton to draw tissues out of the carton. The paper of the tissues has been dry creped from a drier drum of a papermaking machine and has then been subsequently stretched and calendered, so that the tissues are soft and flimsy, to be particularly suitable for facial use.

Stacks formed from the same numbers of light and flimsy paper tissue sheets vary widely in height, due to the many variables in the converting process for the tissues, and this tendency to variation is heightened when comparison is made of sheets from different runs of papermaking machines. For a stack of 200 two-ply facial tissues (400 sheets), the height of an aged unrestrained stack may vary from about three to four and one-half inches, where the tissues are arranged in the common interfolded manner. The tissue sheets lie loosely on another in order to form the stacks, and the densities of the tissues in these stacks vary from about 1.75 to 2.63 grams per cubic inch corresponding respectively to the 4½ inch height and three inch height of the stack and figuring a basis weight of about 7.6 pounds per 2880 square feet, drier basis weight.

If such stacks of tissues are to properly fit into cartons of uniform size, it is obvious that the carton height ought to be such that the stacks of greatest height are accommodated. The result is that when stacks of less than the maximum height encountered are packaged in such cartons, the stack falls short, in some cases far short, of filling the carton. The consequence of this is a widely varying slack fill, which may be sufficient that ordinary handling during shipment and sale will result in serious disarrangement of the stack of tissues. Also, in these packages where the stacks are of less than maximum height, a large part of the carton content is air, with the result that a considerable freight and inventory expenditure is due to the handling of non-utilized capacity. On the other hand, if the stack fills the carton tightly, with the uninhibited height of the stack being greater than carton height, there may be difficulty in dispensing the tissues, particularly if the tissues are of the interfolded kind; and the tissues under these circumstances may bulge the cartons, making stacking difficult.

The problems described above have long been recognized, but until this invention no practical solution has been suggested. It is therefore a principal object of this invention to provide stacks of creped paper tissue, having a common number of sheets, which will be of substantially uniform height, to provide a package of such tissues in which slack fill and over fill are substantially eliminated, and to provide a method for the formation of such stacks and packages.

It is a further object of the invention to provide a method for producing high quality facial tissues with increased softness and decreased ridges due to creping, particularly by compressing clips of the tissues. It is also an object of the invention to increase the quality of such tissues, particularly softness, by allowing the tissue stacks to freely re-expand after being packaged in their cartons and to so control the conditions of compression, the basis weight of the tissue sheets, and the number of sheets within the cartons, with respect to carton height, so that the tissue stacks do not press on the top of the cartons after normally re-expanding for an indefinite time during storage, the stacks of tissue preferably being less in height than the height of the carton after re-expansion so that the tissues do not bind within the cartons to impede or prevent dispensing of the tissues and so that the cartons are not distorted.

Details of these and other important objects and advantages of the invention will be clear from the following description of the attached drawings, in which:

FIG. 1 is a side elevation of a stack of uninhibited and uncompressed interfolded tissues, with the uppermost tissues being distorted to show an interfolded arrangement;

FIG. 2 is a perspective view, partially cut away, of a conventional underfilled package or carton of uninhibited and uncompressed facial tissues;

FIG. 3 is a side elevation of a stack of tissues showing the stack in three different conditions, namely: conditions *a*, *b*, and *c*, illustrating successive steps in compressing the stack;

FIGS. 3A and 3C are illustrations of segments of a stack of tissues in its conditions of FIGS. 3*a* and 3*c* and enlarged to illustrate paper fiber appearance and crepe before and after compression of the stack;

FIGS. 4, 5 and 6 are graphs showing the springback

of stacks of 200 two-ply facial tissues under varying conditions and intervals;

FIG. 7 is a schematic elevational view of the terminal end of a paper tissue making machine and also showing a soft roll on which the paper is wound from the paper machine;

FIG. 8 is a diagrammatic elevational view of a rewinder or calender effective on paper drawn from the soft rolls;

FIGS. 9A and 9B are perspective views, partially cut away, showing, respectively, a conventional carton of the same number of compressed interfolded tissues, the views being positioned side by side for comparison purposes;

FIG. 10 is a side elevational view of a stack of C-folded tissues in uninhibited and uncompressed condition; and

FIG. 11 is a perspective view, partially cut away, showing a carton of compresed C-folded tissues.

Like characters of reference designate like parts in the several views.

The invention is concerned particularly with tissue paper that has a drier basis weight (uncreped) of about 6 to 10 pounds per ream of 2880 square feet and still more particularly of about 7½ or 7.6 pounds per 2880 square feet (uncreped). This drier basis weight is usually figured at about 4½ percent moisture content. Moisture content has as its basis of comparison the dry weight of the paper plus the weight of the moisture in the paper. In other words, paper weighing 1000 grams and having a 4½ percent moisture content has .045×1000 grams of moisture in it.

This paper is made from furnish that is bleached by a conventional bleaching process and has the usual coloring matter and impurities removed from it by the bleaching process. The furnish has no sizing added to it; and the resulting paper, therefore, is practically pure cellulose. The paper is dry creped from the drier drum of a papermaking machine and is subsequently calendered and stretched as will be subsequently described more in detail so as to remove a considerable amount of the creping of the paper due to the dry creping. The paper thus is inherently quite soft and limp; and as compared with sized paper, particularly of the wet creped variety generally used for conventional brown towels, its absorbency is high.

The paper converting apparatus for making the tissue paper may include a conventional Fourdrinier type papermaking machine having a so-called Yankee drier drum **50** (see FIG. 7) at the terminal end of the machine. A shaft **51** extends through the drum, and the drum is thereby rotatably supported by any suitable frame and is driven by any suitable drive mechanism. The wet paper web W to be dried is carried by a felt web **52** which travels around rolls **53**. The paper web is forced against the surface of the drum **50** by a pressure roller **54**.

The paper web W is removed from the surface of the drum **50** by a doctor blade **55** which is held in contact with the surface of the drum by any suitable mounting mechanism. The doctor blade operates to crepe the web from the drum **50** and compress the web into a shorter length, providing creping ridges and grooves in the paper. The drum **50** is heated for drying the web W as by means of steam within the drum; and the web W is substantially completely dry, at least dry to the touch, having less than 10% moisture content by weight, when it is creped by the blade **55** from the drum **50**. The blade **55** is operative to provide the web W subsequent to the drier **50** with a substantial crepe ratio such as on the order of 2.2 or 220%. Crepe ratio is defined as the length of a certain amount of web W on the drier drum **50** divided by the final length of the same amount of web, which in this case is just subsequent to the creping operation. For a crepe ratio of 2.2, the final length of paper is 5½ inches for a foot of paper on the drier drum **50**. The web W from the drum **50** is wound into a so-called soft roll **56** on a mandrel **57** which is rotatably supported on a standard **58**. The mandrel **57** is driven by any suitable driving mechanism, such as a motor **59**.

In converting of the tissue paper for cleansing or facial usage, a so-called rewinder **60** is utilized. The tissues are preferably made of two plies of the creped tissue stock; and in order to provide a two-ply web, two rolls **56** are rotatably mounted in the rewinder to permit withdrawal of the respective webs. The rewinder includes sets of calender rolls **61**, **62** and **63**, idler rolls **64** and a pair of rolls **65** and **66** adapted to contact a so-called hard roll **67** of the web W which has passed through the rewinder.

The soft rolls **56** are each driven from a suitable prime mover such as an electric motor **68**; and each of the rolls **61**, **62** and **63** are respectively driven from other prime movers, such as electric motors **69**, **70** and **71**. The roll **65** is driven by a prime mover, such as an electric motor **72**.

In the operation of the rewinder, web W is drawn from each of the rolls **56** and is passed consecutively between the rolls **61**, **62** and **63** and is finally wound into the hard roll **67**. The pairs of rolls **61**, **62** and **63** have pressure nips between them so as to compress and calender the web as it passes between the rolls. Furthermore, the various rolls in the rewinder **60**, which are connected to the motors **68** to **72**, are so driven thereby that the web is stretched as it passes through the rewinder, the total stretch preferably being such as to decrease the creping from the value of 2.2 previously mentioned to between 1.05 and 1.3 and preferably about 1.2, using the length on the drier drum **50** as a basis of comparison. A foot of tissue on the drier drum that was compressed by the doctor blade **55** to 5½ inches has thus been stretched back to a length of 10 inches for the 1.2 value as it is wound on the hard roll **67**. The restretching of the web by the rewinder and the calendering action by the rolls **61**, **62** and **63**, acting with pressure on the web as it passes between the rolls, augments the effect of the doctor blade **55** in rendering the tissue very soft and limp so that the tissues has these desirable qualities for use as a facial tissue. Incidentally, practically all of the web stretching, about 85 percent of it, in such a rewinder is preferably done between the soft rolls **56** and the first calender rolls **61**, and the subsequent rolls **62** and **63** function principally to calender, so that the web not only is soft and limp, but in addition has a smooth surface.

FIGURE 1 represents a typical stack **10** of paper tissues **11**, such as creped facial tissue, individual sheets commonly being of basis weight (uncreped) of about 7.6 pounds per ream of 2880 square feet, the tissues commonly comprising two plies of such sheets. As shown at the upper part of the stack of FIGURE 1, tissues **11***a* may be interfolded to provide a conventional dispensing action. The unfolded facial tissue commonly is about 9 x 10 inches, the stacks comprising 200, 400 or 600 single sheets, i.e., 100, 200 or 300 two-ply tissues. A stack of 400 sheets (200 tissues), aged for a few weeks or months, will have an uninhibited and uncompressed height of about three to four and one-half inches, the exact height depending on many factors, such as type of wood pulp from which the paper is made, type of papermaking process, age of sheet, degree of creping, temperature and moisture content of sheet, and particular machine conditions involved in making the sheet and tissue. Prior to such aging, the stack heights are somewhat less, such as 2½ inches to 3¾ inches.

FIGURE 2 shows a conventional carton **15** of creped tissues **11**, the carton being unavoidably only partly filled. The carton has four rectangular plane sides and a rectangular plane top and bottom and is made of relatively thin paperboard. It has a tissue dispensing opening defined by perforation line **16**.

If both maximum and minimum height stacks of such sheets are to be accommodated in a single size carton, it is obvious that the carton height must be approximately

four and one-half inches. Obviously, the carton then ideally fits only those stacks which are of approximately the maximum height encountered, and as to stacks of lesser height the carton has a slack fill which may be as much as about 50 percent. Under these latter conditions, the carton contains only one-half product, with resulting great penalty in shipping costs and great waste in storage. It is equally obvious that in such instances there is also a wastage in the actual carton material used to contain the stacked tissues. On occasion, there results a tight or over fill, with resulting adverse effect on the tissue dispensing action. This invention provides a particular method, tissue stack and package in which these adverse and wasteful factors and substantially eliminated.

It has been found that if a stack of such creped tissue sheets is subjected to great force in the direction of its height (perpendicular to the plane of the sheets), the stack may be very considerably compressed, and upon release of such force the stack does not expand to its original height but rather expands to only a limited and substantially controllable extent. It has also been found that such forces may be equally applied to stacks of sheets which were originally of widely varying heights, and that after release of such force the limited expansion of such stacks will be to heights which are nearly equal, so that stacks which were originally of widely varying heights may be reduced to controlled and substantially equal heights. The result of this is to permit substantial elimination of slack fill of cartons and wastage of storage transportation requirements, and reduction in the amount of carton material needed to package stacks of tissues of a particular numerical count.

As mentioned, the stacks of tissue after compression do spring back a certain distance and increase in height from that at which the stacks are in their maximum compressed condition. It is contemplated that the ultimate, uninhibited height of such stacks after spontaneous re-expansion for an indefinite time during storage, such as weeks or months, still will be no more than the internal height of the cartons in which the stacks are packed, which is about the same as the external height of the cartons, so that the stacks of tissues exert substantially no force on the cartons. Preferably, the ultimate stack heights after spontaneous re-expansion are less than the height of the cartons, such as by at least ⅛ inch or 1/16 inch. The stack heights are so controlled since, if the stacks of tissues pressed on the tops of the cartons having the dispensing slots or openings therein, the tissues would bind in the cartons, and there would be sufficient friction between the tissues and the cartons, which are of paperboard, to either prevent or substantially hinder dispensing of the tissues. Also, if the stacks of tissues within the cartons had such a spring back action as to put a substantial force on the cartons, the cartons, which normally have plane tops and bottoms, would bulge on their tops and bottoms and would not stack without a tendency to tilt.

It has also been discovered that upon application of predetermined and controlled compressive forces to such stacks, a facial tissue of superior quality results. An important factor in determining quality and acceptance of a facial tissue is the feel or "hand" of the sheet. This "hand" is concerned with softness, flexibility, and "paperiness" or slickness. Also involved in quality is the degree of rattle which the sense of hearing can percept, hard sheets ordinarily having more rattle than soft and velvety sheets. The process of this invention provides a tissue sheet with improved hand characteristics as to softness and smoothness, but without objectionable adverse effect on other properties. This improved character may be due largely to dulling of the relatively sharp peaks of creping, working of the sheet, and ironing of the sheet surface. At the same time, this compression of stacks of sheets does not adversely affect absorbent rate, absorptive capacity or strengh of the sheets, which also are critical factors involved in commercial acceptability of the product. Not only does such compression not adversely affect dispensability of the tissues, but in fact it provides an advantages in this characteristic, perhaps due to an interfacial bonding between successive tissues which adds to the effective strength available in the pulling of successive tissues into dispensing position. This action also tends to increase tissue strength, apparently due to unification of the sheets making up each multi-ply tissue through an interengagement of fibers. This also tends to reduce ply separation.

Increased softness of the compressed facial tissues is also apparently due to the spontaneous re-expansion of the tissues that takes place after compression and after packaging in the cartons and which is uninhibited by the carton since the stacks of tissues when packaged in the cartons have a height substantially less than the height of the cartons and, after subsequent storage for a substantial length of time, have a height no greater than the height of the cartons and preferably somewhat less than the height of the cartons. This re-expansion takes place over a period of time, such as a few weeks or a few months, while the cartons of tissues are stored either in warehouses or stores for subsequent use. The softness increases within limits with increased time storage; and, during this time of storage, the tissues tend to spring apart and the paper fibers on the surfaces of the tissues that have been bent downwardly into the bodies of the tissues by the compression tend to straighten out and assume their prior directions protruding outwardly from the body of the tissues to increase the surface softness of the tissues.

An additional advantage of compressing the tissues is that less linty tissues are thereby produced. The doctor blade **55** tends to separate and splinter off some of the paper fibers from the body of the tissues in creping the web W from the drum **50** and thus working the web and providing creping peaks in it and decreasing its length to only a fraction of the length that it has on the drum **50**. The compressing operation tends to rebond the fibers, that have been thus somewhat separated from the bodies of the tissues and would appear as lint, back into the tissues, thus producing a superior product in this respect.

FIGURES 4, 5 and 6 show the average spring back height of 400-sheet (200 two-ply tissues) stacks of facial tissue which were compressed to a height of approximately 9/16 inch, this compression being maintained for varying periods of time as indicated, respectively for stacks of tissue which had been brought to equilibrium at relative humidities of 50 percent, 20 percent and 75 percent. These relative humidities correspond to moisture contents of the tissues of about 6 percent, 4 percent and 10 percent, respectively. The moisture contents of the tissues are measured by weight, a moisture content of 4 percent, for example, indicating that of the total tissue weight, 4 percent of this total weight is water, which may be driven off as the tissues are heated to a temperature slightly above the boiling temperature of water. These stacks in the uncompressed state were of heights varying from about two and one-half inches to about three and three-fourths inches. The pressure applied against the stacks to achieve the degree of compression shown was about 750 pounds per square inch for the 50 percent and 20 percent relative humidity stacks and about 480 pounds per square inch for the 75 percent relative humidity stack.

Referring specifically to FIGURE 4, it is seen that immediately upon release of the stacks from maximum compression (approximately 9/16 inch), the stacks expanded to a height of about 1.45 inches in the case where compression was maintained (dwell time) for a period of one second, and to a height of about 1.3 inches if the maximum compression was held for a period of two seconds or more. Five minutes after release of compression, these stacks on the average had expanded to a height of approximately 1.6 inches, with only slight differences due to the varying times of dwell at maximum compres-

sion. Thereafter expansion continued at a progressively lower rate until at the end of seven days the stacks had expanded to an average height of about 1.9 inches. From this it is clear that these stacks, which contain 400 sheets folded in half so as to produce 800 sheet thicknesses in each stack and normally packaged in boxes or cartons about four inches in height, conveniently may be packaged in cartons two inches in height. Using cartons two inches in height, the height of the cartons for these packages, thus, is one inch for 400 thicknesses. It is also clear that expansion of the stacks from the compression state would not result in the top of the stacks within the cartons reaching the tops of the cartons, except that it is apparent for the case of only one second dwell time there may eventually result some closeness of fit of the stack in the carton. Therefore, if only a second dwell time is used, a slightly larger carton should be used or else the gap of the members compressing the tissues should be reduced below the 9/16 inch value above mentioned. A definite advantage resulting from this invention resides in the greater ease of dispensing tissues from a carton of reduced height, particularly as the last tissues are being dispensed.

FIGURE 5 is a similar graph showing the effects of compression of stacks brought to equilibrium in an atmosphere at about 20 percent relative humidity (about 4% moisture content of the tissues). It is seen that with the decreased moisture content of the tissues, the height of expansion after release of compression is somewhat greater than for the stacks of six percent moisture content; and, in fact, the height of the tissues for all dwell times shown in FIG. 5, particularly at seven days after compression, is above two inches, so that usage of these tissues in a two-inch carton would result in binding of the tissues within the carton and bulging of the carton. The tissues at the four percent moisture content compressed to 750 pounds per square inch, therefore, are not suitable under these conditions. It has been found, however, that if the stacks of tissue having a four percent moisture content are compressed under a pressure of 1400 pounds per square inch, there results sheets of unusually fine hand and stacks of excellent dispensability, with the clips of sheets within the cartons being less in height than the carton height.

FIG. 6 shows the corresponding results when the subject is a series of stacks brought to equilibrium at a relative humidity of 75 percent, thus having a moisture content of about 10 percent and with the pressure applied being about 480 pounds per square inch. It is clear that these stacks do not exhibit the resilience and re-expansion of those previously discussed, and in fact the complete expansion is substantially achieved within one hour of release of the compressive force (the line in the FIG. 6 graph indicating the re-expansion height for one hour after compression is the same as those indicative of 24 hours after compression and 7 days after compression). It is also noted that a substantially lesser pressure was required to reduce these stacks to a 9/16 inch compressed height. Further, the resulting sheets in this example are not satisfactory for the intended purpose. The unsatisfactory quality of the sheets in this example indicates that an excess of compression is possible, resulting in poor tissue quality and being related to the degree of re-expansion. These sheets when so compressed exhibit a board-like texture and feel, considerable rattle and paperiness, a tendency toward dampness of feel and the stacks exhibit a marked tendency toward bulging at the sides and ends, causing some difficulty in packaging. These unsatisfactory results may be ameliorated by compressing the stacks under a pressure of about 250 pounds per square inch.

It is clear from the foregoing discussion and the accompanying figures that a significant period of dwell at maximum compression, for example, about the order of one second, is necessary in order to keep the re-expansion within desired limits, while maintenance of this dwell beyond about two seconds does not materially add to the desired qualities. It is also clear that the moisture content of the clips or stacks materially affects the compressive force necessary to achieve the desired compression and subsequent set or degree of re-expansion. In order to obtain the ultimate reduced clip height desirable so that the clips may fit within their cartons loosely for easy dispensing, and in order to obtain augmented quality, particularly increased limpness and softness, the pressure that should be applied to the tissue clips should be decreased as the moisture contents of the clips are increased. In particular, the foregoing examples have indicated that for tissue moisture content of 4 percent, 6 percent and 10 percent, pressures of 1400 pounds per square inch, 750 pounds per square inch and 250 pounds per square inch, respectively, provide these desirable qualities.

I have also found that these pressures may be varied with satisfactory results, both with respect to better quality of tissues and ultimate reduced stack height. The pressure at 6 percent moisture content may be varied between 700 and 390 pounds per square inch and at 10 percent between 240 pounds per square inch and 380 pounds per square inch. It will also be apparent that satisfactory results may be obtained at other moisture contents of the tissues if comparable pressures are applied on the tissues which may be interpolated between or extrapolated from these values. Desirable pressures, for example at 5 percent would be between 700 and 1400 pounds per square inch; and for moisture contents between 6 percent and 10 percent, a range of pressures would be suitable, the lower limits of which would be between 240 pounds per square inch and 700 pounds per square inch and the upper limits of which would be between 380 pounds per square inch and 930 pounds per square inch, these numerical values being mentioned above in connection with moisture contents of 4 percent, 6 percent and 10 percent.

While the theories and physical results are not known with completeness, it appears that the re-expansion of the stacks is largely due to re-entry of air into and between the sheets, to partial recovery of the creped configuration (the crepe ratio after calendering preferably being between 1.05 to 1.30 and more particularly about 1.2) and to a partial regaining of original configuration by the individual paper fiber. This is shown by FIGURES 3A and 3C, showing differences in fiber alignment and configuration, and the spacing between adjacent sheets **11***b*, **11***c*, **11***d*, **11***e* before compression and upon re-expansion after compression. The relative dimensions of the uncompressed stack of FIGURES 3A are only approximate. FIGURE 3C indicates the bending of the extended fibers which results from compression of the creping in the sheets, as well as the reduction in spacing between adjacent tissue sheets. Creped sheets **11***b* and **11***c* form one two-ply creped tissue, **11***d* and **11***e* forming a second tissue. The permanent reduction in stack height is probably due in part also to semi-permanent creasing of the folding edges of the tissues upon compression of the stacks.

As above mentioned, good results in compressing the tissue are obtained from the standpoint of both better quality and reduced height if 1400 pounds per square inch at 4 percent moisture content, 750 pounds per square inch at 6 percent moisture content and 250 pounds per square inch at 10 percent moisture content are applied. For 200 two-ply tissue (400 sheets of about 7½ pounds per ream basis weight), these pressures correspond to a compression to 9/16 inch, 5/8 inch and 23/32 inch, respectively. Figuring an original height of 2½ inches to 4½ inches, a reduction to 9/16 inch amounts to a reduction to 12½ percent to 22½ percent of original height; a reduction to 5/8 inch amounts to a reduction to 13.9 percent to 25 percent of original height and a reduction to 23/32 inch amounts to a reduction to 16 percent to 28.8 percent of original height. Therefore, it appears that a reduction of about 12 percent to 29 percent of original height pro-

vides a desirable decrease in overall clip height and increase in tissue quality.

The clips of tissue, subsequent to compression of 240 pounds per square inch to 1400 pounds per square inch depending on moisture content, re-expand somewhat from their compressed heights. The clips are then packaged into the cartons, and on subsequent storage, as is apparent from FIGS. 4, 5 and 6, the clips within the cartons expand still further. The subsequent expansion on storage is however, to a free, uninhibited height which is not more than and is preferably a little less than the height of the carton due to the particular pressures that have been applied to the tissues. Easy dispensing of the tissues from their cartons is thus possible.

FIG. 4 is indicative of desirable heights of tissue clips of 200 two-ply tissues of sheets of about 7½ pounds per ream basis weight as they are packaged within their cartons. As will be observed, after seven days of storage, assuming more than one second dwell time, the clip heights vary, from 1¾ inch to 1 15/16 inch. The densities of the tissue clips within the cartons corresponding respectively to these heights are 4.5 grams per cubic inch and 4.07 grams per cubic inch. These densities are of bone dry tissues and the weight of any moisture in the tissues would be added to these figures for any particular moisture content. At 6 percent moisture content, for example, the respective densities would be 4.75 grams per cubic inch and 4.3 grams per cubic inch corresponding to the 1¾ inch and 1 15/16 inch clip heights. At the 2½ and 4½ inch uncompressed heights of the tissue clips, the clips incidentally have 1.75 and 3.15 grams per cubic inch densities, so it is apparent that the initial densities have been materially increased by the compression.

Although it is preferable that the uninhibited clip height be less than the carton height, the uninhibited clip height may be greater than the figures given above and may be the same or less than the carton height while still obtaining advantages of the invention. At a carton height of 2 inches, the tissue clips above mentioned have a density of 3.95 grams per cubic inch in bone dry condition and at 6 percent moisture content, for example, the density would be 4.18 grams per cubic inch.

Under certain conditions, higher densities of the tissues are also satisfactory, such as the tissues, for example, used in dry areas of the country. Under such conditions, unrestrained stack heights of 1⅝ inches and 1 11/16 inches may also be used, and the densities of the tissues at these stack heights are respectively 4.85 grams per cubic inch and 4.67 grams per cubic inch. For the unrestrained stack heights of 1⅝ inches, 1 11/16 inches, 1¾ inches, 1 15/16 inches and 2 inches, the number of paper thicknesses (which is twice the number of individual sheets or four times the number of two-ply tissues in the stack) in these stacks are respectively 492, 474, 454, 413 and 400 per inch. Thus a satisfactory range of thicknesses per inch of unrestrained stacks may range approximately from 400 to 500 thicknesses per inch of the type of creped tissues mentioned.

FIGS. 9A and 9B illustrate the advantages of the present invention. The same number of tissues in compressed condition may be packed in and occupy a carton **15***a* which is only half the height of the carton **15** for the original uncompressed tissues. Thus, in lieu of 4 inch high carton for the 200 two-ply tissues, a 2-inch high carton is satisfactory. The slack fill that occurs as a general rule and which is quite variable, in connection with the uncompressed tissues as illustrated in FIG. 9A, is overcome, and only a slight spacing, such as of ¼ inch or less, may be used satisfactorily in connection with the compressed tissues, as is illustrated in FIG. 9B.

As is apparent, the invention may also be utilized in connection with tissues which are folded in some configuration other than interfolding. The invention is illustrated in FIGS. 10 and 11 in connection with C-folded tissues, FIG. 10 illustrating an uncompressed stack of C-folded tissues **12**. Each of these tissues has a central base portion **12***a* and has side edge portions **12***b* and **12***c* which are folded over the central portion **12***a* and have a space **12***d* between them. The base portion **12***a* may, for example, be 4 inches wide, and the space **12***d* may, for example, be ¾ inch wide.

These tissues **12** are compressed in the same manner as the interfolded tissues **11** previously described, and the tissues **12** are packed in a carton **13** shown in FIG. 11. These tissues re-expand after compression so as to have an uninhibited height which is no more than and is preferably less than the height of the carton so as to provide a little space **14** between the top of the clip and the top of the carton. The carton **13** has a relatively broad oval shaped perforation **13***a* in its top panel so as to provide a dispensing opening through which a person may reach within the box to grasp tissues for usage. In the case of these compressed C-folded tissues, the above mentioned densities are preferably utilized; however, these density values apply only on the vertical lengthwise extending zones of the tissues containing the folds **12***b* and **12***c*, inasmuch as it is obvious that there are only half as many thicknesses of tissue in the gap **12***d* as in these zones.

It will be apparent that any suitable pressure applying mechanism may be used for compressing the tissue clips, such as an intermittently operating hydraulic press, although it would obviously be preferred to use a continuously operating mechanism.

The compressed tissues of the invention advantageously require substantially smaller cartons than are required for the corresponding number of uncompressed tissues, a carton of substantially half height being satisfactory. The variable slack fill of uncompressed tissues in their cartons is substantially eliminated; and, although some slack fill (such as 1/16 inch to ¼ inch) is preferable with the compressed tissues, the tissue clips may occupy the complete height of the carton if they exert substantially no pressure on the carton while still obtaining advantages of the invention. Although lint may be raised by the dry creping of the light basis weight tissues, which are practically pure cellulose, having been bleached and calendered and containing no sizing, nevertheless, the compressing operation reduces the lint, and the result is a soft, limp, smooth substantially lint-free tissue. The subsequent re-expansion of the tissues within their cartons during storage allowed by the slack fill with which the clips are packaged in their cartons allowing such re-expansion, softens the tissues, since the tissues break away from each other to some extent and work the surfaces of the tissues during the re-expansion.

Having now described and illustrated the invention, and having indicated preferred forms or embodiments thereof, it is to be understood that limitations on the invention are intended only as set forth in the following claims.

I claim:

1. A package of paper tissues comprising a carton, and a stack of folded sheets of creped tissue paper within said carton, said paper having a drier basis weight of about 7½ pounds per 2,880 square feet and having a crepe ratio between 1.05 and 1.3, the sheets being made of bleached furnish to which no sizing is added and which is dry creped and calendered so that the tissues are soft and smooth and limp, said stack within the carton having an uninhibited height which is slightly less than the height of the carton so that the stack of sheets is loose and provides a slack fill within the carton and having between 401 and 500 tissue thicknesses per inch of stack height, the density of the stack of sheets being between 3.96 grams per cubic inch and 4.85 grams per cubic inch when in bone dry condition.

2. A package of paper tissues as set forth in claim 1 in which said carton is a paperboard box having a rectangular bottom, a top with a tissue dispensing opening

therethrough and plane sides which sides have a height of about 1 inch per 400 tissue thicknesses, said tissues being interfolded in double thicknesses with each other to provide 2-ply folded tissues, and the slack fill of the tissues within the carton allowing the 2-ply folded tissues to be withdrawn one at a time through said dispensing opening.

References Cited by the Examiner

UNITED STATES PATENTS

1,121,011	12/14	Hamilton et al.	206—57
1,989,048	1/35	Winter et al.	

2,025,969	12/35	Broeren	206—57
2,682,137	6/54	Cox	53—24
2,765,909	10/56	Graham	206—57
2,923,435	2/60	Chaplin	221—47
2,973,607	3/61	Mosier	53—24
3,007,605	11/61	Donovan	221—47

THERON E. CONDON, *Primary Examiner.*

EARLE J. DRUMMOND, GEORGE O. RALSTON, *Examiners.*