June 11, 1968 W. S. STRITTMATTER 3,387,493

MOTOR-OPERATED EXERCISING DEVICE WITH LOAD RESPONSIVE INDICATING MEANS

Filed May 12, 1965

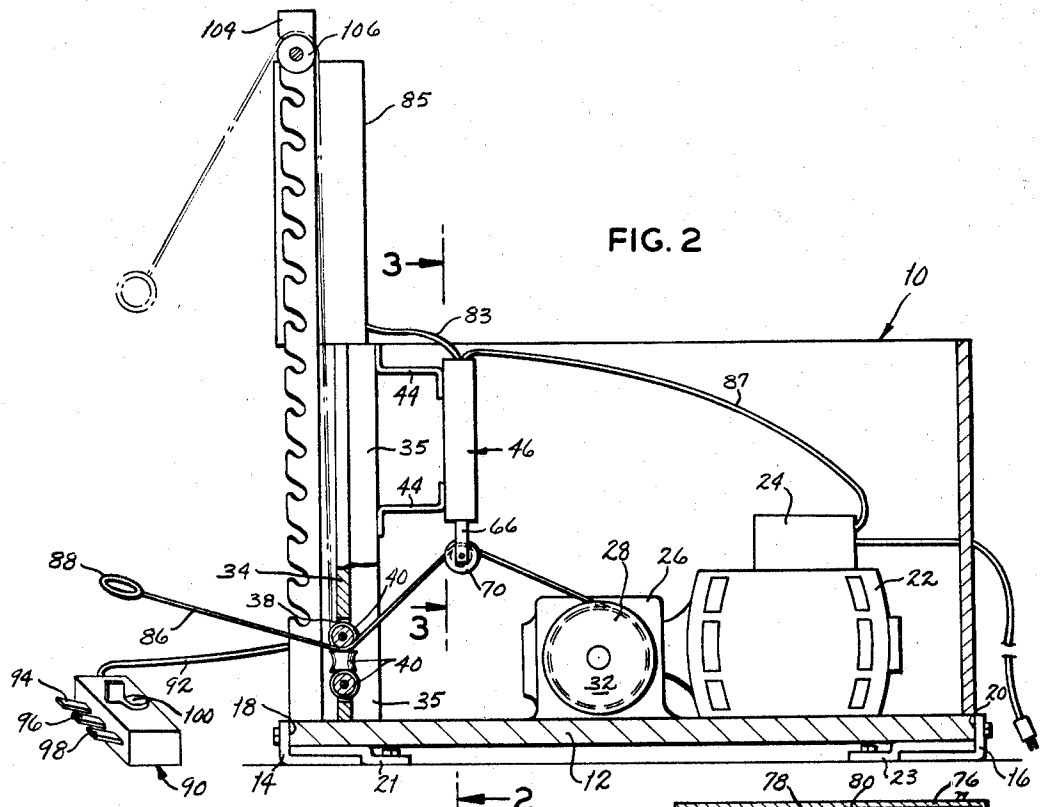

FIG. 2

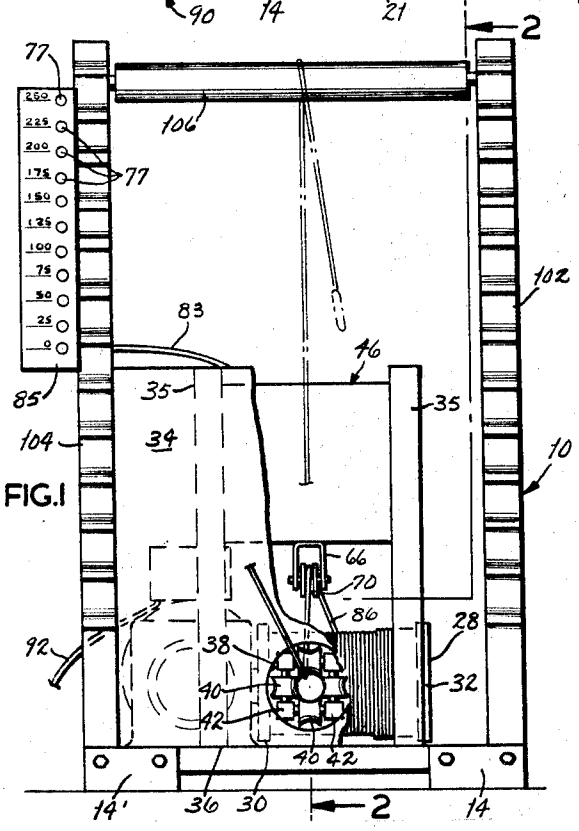

FIG. 1

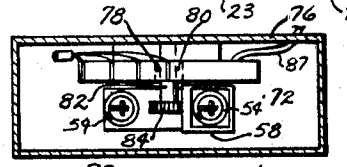

FIG. 4

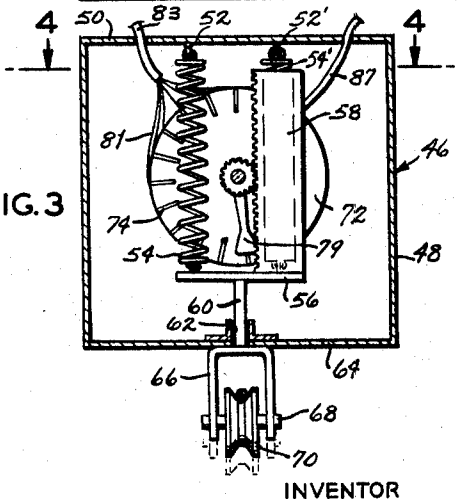

FIG. 3

INVENTOR

WALLACE S. STRITTMATTER

BY Joanne A. Grover,

ATTORNEY

United States Patent Office 3,387,493 Patented June 11, 1968

3,387,493

MOTOR-OPERATED EXERCISING DEVICE WITH LOAD RESPONSIVE INDICATING MEANS

Wallace S. Strittmatter, 330 Scout Drive, Belleville, Ill. 62221

Filed May 12, 1965, Ser. No. 455,212
8 Claims. (Cl. 73—379)

ABSTRACT OF THE DISCLOSURE

Motor-operated exercise therapy apparatus is suitable for programmed concentric, eccentric and isometric muscle contractions. A cable, whose outer end is held by the user in tension, is driven by a reversible variable speed motor powering a winding drum. The cable passes outward from the drum through force-measuring means which electrically displays to the user the force exerted by him. A motor control, positioned near the user, permits him to change the drum speed and direction of rotation, thus permitting the user to change from concentric to eccentric or isometric contractions.

The present invention relates generally to improvements in exercising apparatus, and more particularly to an exercise therapy unit wherein the speed, direction, and resistive force at chosen points in an exercise cycle may be readily and independently varied.

Three types of muscular contractions are encountered in basic muscle exercise; they are eccentric, isometric, and concentric contractions. Of these, the eccentric and concentric contractions produce joint motion by the lengthening and shortening of the muscle fibers, respectively. Eccentric contractions occur, for example in an arm biceps muscle, when a weight is lowered from the shoulder, while concentric contractions in this same muscle occur when a weight is raised to the shoulder. Isometric contraction of a muscle occurs when it is placed in tension and joint movement is prevented, for example by the muscle exerting force against an immovable object.

Heretofore, various weights and weight-pulley devices have been used for exercise and muscle building. No single such device, to my knowledge, has made it possible to accurately and conveniently administer all of the three basic muscle exercises employed by a physical therapist, especially those of the eccentric and isometric type, by readily and independently controlling the rate of the exercise, the range of movement, and the resistance to be overcome.

Therefore, among the objects of the present invention are the provisions of an exercise therapy unit wherein:

The three basic muscle exercises, and especially the eccentric type, may be conveniently administered independent of gravity-operational apparatus and in any selected or programmed sequence;

The administering of muscle exercise may be readily varied as to speed, resistance and kind;

It is assured that at any time during the exercise when the person exercising experiences pain or muscle strain, the contracted muscle may be relaxed without fear of injury to them or damage to the apparatus;

Instantaneous indications of the muscle force being exerted during an exercise are displayed to effectively administer the exercise and motivate the person exercising; and

The versatility of the apparatus permits the application of muscle exercise to a plurality of individual muscles or muscle groups and to persons who are restricted to exercise in certain positions only.

These objects (as well as others apparent herein) are

achieved generally by providing an exercise therapy unit having an electric motor which is controllable for reversibly rotating a winding drum at precise speeds. Upon the winding drum there is provided a nylon cable that is paid-out from or return-wound upon the winding drum in response to the direction and driving speed of the electric motor. The cable connects through a deflectance-type force-measuring unit, where muscle force applied to the cable by the exercising of a person is sensed and converted into an electrical signal indicative of such force. The electric signal then in turn is converted into a visual display observable by the person exercising at the same instant that his muscles apply the force to the cable. Means are provided so that the person exercising or someone administering the exercise can selectively control the starting, stopping, direction of rotation, and speed of the electric motor.

Utilization of the invention will become apparent to those skilled in the art from the disclosures made in the following description of a preferred embodiment of the invention as illustrated in the accompanying drawings, in which:

FIG. 1 is a front elevational view of an embodiment of the exercise therapy apparatus of the present invention, shown with a front panel partly broken away, the phantom lines illustrating the force-transmitting cable utilized in an alternative exercise position;

FIG. 2 is a sectional view taken along line 2—2 of FIG. 1;

FIG. 3 is an enlarged cross-sectional view of the force-measuring deflectance unit of the present inventioin taken along the line 3—3 of FIG. 2; and

FIG. 4 is an enlarged cross-sectional view thereof taken along line 4—4 of FIG. 3.

Referring now to the drawings wherein like reference characters designate like or corresponding parts throughout the several views, there is shown in FIGS. 1 and 2 an exercise therapy unit generally designated **10**. It includes a flat platform **12** having four angles **14**, **14'** and **16**, **16'** secured at its front and rear edges **18** and **20** respectively. The angles **14**, **14'**, **16** and **16'** may be fitted under four joggled plates **21**, **21'** **23** and **23'** which are in turn fastened to a floor or some other immovable base. By means of these angles and plates the platform **12** may be moved from one location to another and conveniently mounted with assurance that it will not slide when in use.

Mounted toward the rear edge **20** of the flat platform **12** is a reversible, variable speed electric motor **22**. Preferably the electric motor **22** is of the type which operates from direct current supplied from a rectifier unit **24** supported by the motor **22**. The rectifier unit **24**, converts alternating current supplied from a conventional wall outlet (not shown) to direct current which powers the motor **22**. It has been found that a D.C. motor rated at 1/16 H.P. will afford the power required over the desired range of resistive exercises to be undertaken with the apparatus **10** as well as providing a sufficient range of precise speeds. It should be understood, however, that an A.C. motor may be used where appropriate speed regulation devices are provided therewith.

Forward of the motor **22**, its drive shaft is coupled to a speed reduction unit **26** which is mounted on the platform **12**. The speed reduction unit **26** has a conventional gear train (not shown) which serves to step-down the speed and increase the torque developed at the motor **22**. As may best be seen in FIG. 2, a winding drum **28** having flanged edges **30**, **32** is connected to and extends laterally from the output shaft of the speed reducton unit **26**. The winding drum **28** is spaced above the platform **12**; it may be freely rotated in either the paying-out (counter

clockwise as viewed in FIG. 2) or rewind (clockwise as viewed in FIG. 2) directions.

Toward the front edge 18 of the platform 12 a vertically-extending front wall panel 34 is secured to the platform 12 by means of two vertical, spaced-apart posts 35. Near its lower edge 36 the front wall panel 34 is provided with a cable-exit aperture 38 bounded by a system of four-friction-minimizing rollers 40, which are suspended in the plane of the front wall panel 34 by means of four roller-shaft bearing members 42.

Above the aperture 38 two brackets 44 extend rearward from the vertical posts 35 to mount a muscle-force-measuring deflectance unit 46. The deflectance unit 46 includes a box-like housing 48 whose top wall 50 has two spaced anchor hooks 52, 52' secured to it and presented to the housing interior as shown in FIG. 3. Suspended from the anchor hooks 52, 52' are two coil springs 54, 54' which are secured at their lower ends to a flat plate member 56. The coil spring 54' is enclosed within a tubular rack member 58 whose one side 59 is provided with gear-like teeth and whose lower end 61 is welded to the lower surface of the flat plate member 56. A connecting rod 60 is welded to the flat plate member 56 and extends downward through a collared guide opening 62 in the botom wall 64 of the deflectance unit housing 48. It terminates in an inverted U-shaped bracket 66 which rotatably supports a pulley-support rod 68 upon which is mounted a pulley 70.

A disk 72 of insulating material having ten inlaid, electrically conductive contact strips 74, spaced at selected intervals, is spacedly mounted from the rear wall 76 of the housing 46. An opening 78 through the disk 72 is provided with a bearing 80 so that an electrically conductive shaft 82 may extend from its journalled end at the rear wall 76 and, through the opening 78. At its inner end the shaft 82 has a conductive pinion gear 84 presented in meshing engagement with the gear teeth of the rack member 58. An electrical conductive wiper leaf 79 is fixed to the pinion gear 84 and rotates with it to contact the inlaid contact strips 74 when so rotated. Except for the leaf 79, the shaft 82, the gear 84, and the inlaid strips 76, the various other parts of the deflectance unit 46 are appropriately rendered non-conductive by insulating them from the indicating circuit, now to be described.

Each contact strip 74 has a wire 81 leading from it through an electrical conduit 83 to an indicating light 77 provided at a video display unit 85. The electrical circuit including the wires 81 and the lights 77 further includes a pair of wires 87 connected at the rectifier 24 to a source of current, one of the wires 87 leading to a wiper contact (not shown) provided against the pinion shaft 82 and the other serving as a common return wire from the display lights 77. The precise electrical circuit connections are not shown; such conventional switching circuits being well known to those skilled in the art. The display lights 77 are shown as being graduated to read convenient increments of force. It has been found that a range of from zero to 250 pounds is adequate for the desired exercises to be performed with the exercise therapy unit 10.

A force-transmitting nylon cable 86 is provided for transmitting the forces exerted by the person exercising to the measuring and display apparatus just described. Although the cable 86 may be connected at its end to various well known force application devices (for example, handles, bars, cuffs or sprockets of an everciser bicycle), it is shown connected to a gripping ring 88. From the ring 88 the cable 86 passes through the front panel aperture 38, over the pulley 70 of the deflectance unit 46, and to the winding drum 28 upon which it is wound.

A foot operated control unit 90 is connected by an electrical cable 92 to the D.C. motor 22. The control unit 90 is provided with three pedal-operated control switches 94, 96 and 98. The control switch 94 serves to close a circuit for driving the motor 22 in its forward direction, the control switch 98 closes a similar circuit for driving the motor 22 in its reverse direction, and the switch 96 opens the forward and reverse drive circuits to stop the motor 22. A combination on-off switch and rheostat 100 for varying the speed of the electrical motor 22 is also provided. As the circuit connections between such switches and rheostat and a motor are well known, they are not shown in schematic detail.

Often it is desirable to greatly increase the height at which the cable 86 is paid-out and rewound. For such cases two vertical rails 102, 104 are secured to the platform 12 just forward of the front wall panel 34. Aligned notches are provided along the rails 102, 104 so that a roller 106 may be positioned above the front panel aperture 38 at different levels. Thus, the cable 86 may be threaded through the aperture 38 and over the roller 106 so that the height of the cable 86 may be adjusted for particular exercises (see the phantom lines of FIGS. 1 and 2).

In using the exercise therapy apparatus 10, either the person exercising or a person administering the exercise (e.g., a physical therapist) may operate the foot-operated control unit 90. Initially the circuits for energizing the display lights 77 and the D.C. motor 22 are actuated by turning the combination on-off switch and rheostat 100 to its "on" position. Next the speed at which the cable 86 is to be paid out is set by adjusting the rheostat 100. A simple "curl" exercise for strengthening the biceps muscle may be executed by grasping the ring 88 in the hand and pulling against the cable 86, the movement occurring at the elbow. By pressing the control switch 94 the motor 22 is energized and driven so that the winding drum 28 pays out the cable 86 from the drum. The concentric force exerted by the biceps of the person exercising is transmitted to the pulley 70 of the muscle-force-measuring deflectance unit 46. This applied force produces elastic deflection of the springs 54 proportionate to the muscle force applied at the gripping ring 88.

Deflectance of the springs 54, 54' causes the rack member 58 to rotatably drive the pinion gear 84 which in turn sweeps the wiper leaf 79 over the contact strips 74. The electrical circuit energizes the display light 77 associated with the contact strip 74 contacted by the wiper leaf 79, thus a visual display is read out to the person exercising at the precise moment that he is applying the force to the cable 86.

It should be noted that the rollers 40 allow the cable 86 to pass through the aperture 38 and extend at varying angles from the apparatus 10 without undue frictional resistance.

When, during the exercise cycle, it is desired to perform an eccentric contraction, the control switch 98 may be pressed to reverse the direction of the motor 22. If desired, the speed may be changed too by re-positioning the rheostat 100. The person exercising then resists the pull of the motor 22 as it is rewound on the drum 28. The degree of resistance is governed by the person himself who watches the graduated indicating lights 77 and maintains sufficient resistance to light the prescribed light.

An isometric contraction can be performed at any point in the exercise cycle by stopping the motor 22 by means of the control switch 94 and pulling against the cable 86. Since the cable 86 cannot be paid-out with the motor 22 stopped, the force applied to the cable 86 by the person exercising is the same as that applied to an immovable object, i.e., an isometric contraction is performed. The magnitude of the contraction is readily observed at the video display unit 85 and directly controlled by the person exercising.

Although the amount of deflectance in the springs 54, 54' may be fairly small, the "feel" which accompanies their increase in deflection with applied force lends a "liveness" to the exercising process, which is believed to be most desirable.

Many modifications and variations of the invention are possible in view of the above teachings. For example, an audio indicating device could be employed instead of the visual display, and various safety devices could be incorporated to insure that the cable would never be rewound too far. Furthermore, it should be understood that the "curl" exercise described herein is merely illustrative of one use of the invention and numerous other uses will be apparent to those skilled in the art. Therefore, it is to be understood that, within the scope of the appended claims, the invention may be practiced otherwise than as specifically described.

I claim:

1. Exercise therapy apparatus, comprising:
a support member,
a reversible variable speed electric motor mounted to said support member,
a winding drum mechanically connected to and rotatably driven by said electric motor,
control means electrically connected to said reversible motor for selectively starting, stopping, reversing and varying the speed at which the winding drum is driven by said motor,
a force-transmitting cable wound around and extending from said winding drum and having gripping means on the cable end remote from said drum,
deflectance means affixed to said support member and having a deflecting end engaged by said force-transmitting cable for elastic deflection proportionate to the muscle force applied to said cable, and
display means electrically connected to said deflectance means for displaying the amount of muscle force applied to said force-transmitting cable.

2. The exercise therapy apparatus of claim 1, wherein:
the deflectance means includes a coil spring secured at one end and having at its other end a pulley over which said cable is drawn.

3. The exercise therapy apparatus as described in claim 1, further comprising:
friction-minimizing cable guide means mounted forward of said winding drum for receiving therethrough said force-transmitting cable,
whereby said force-transmitting cable may be extended from said guide means at varying angles.

4. The exercise therapy apparatus as defined in claim 3, together with:
vertically-adjustable support means for said cable guide means.

5. A motor-operated exercise device, comprising:
a reversible, variable speed electric motor,
a winding drum mechanically connected to and rotatably driven by said electric motor,
control means electrically connected to said reversible motor for selectively starting, stopping, reversing and varying the speed at which the winding drum is driven by said motor,
a force-transmitting cable wound around and extending from said winding drum and having gripping means on the cable end remote from said drum, and
means for measuring and indicating the measurement of the muscle forces applied by the user to said end gripping means,
said means measuring and indicating engaging said force-transmitting cable intermediate its said gripping means and said winding drum, and including
deflectance means deflectable elastically proportionate to the muscle force applied thereto by said cable and restorable to its initial position when such force is removed,
said muscle force measuring and indicating means further including
graduated electrical indicator means for indicating the amount of muscle force applied to said force-transmitting cable, and
electrical circuit means, connecting said indicating means to said deflectance means, for correlating the indications of said indicator means with the deflecting movement of said deflectance means.

6. A motor-operated exercise therapy device, comprising:
a frame,
a reversible, variable speed power driven motor,
a winding drum mechanically connected to and rotatably driven by said motor,
control means to start, stop, reverse and vary the speed at which the winding drum is so driven, and
a force-transmitting cable wound around and extending from said winding drum and having means on the cable end remote from said drum for a user to apply a single force thereto,
said device further having, positioned along said cable intermediate the drum and the force-application means at its remote end,
means for measuring and indicating the measurement of the single force so applied by the user and resisted by the drum, and
cable guide means mounted, in a position fixed by the frame, between said force measuring means and said force application means,
whereby the accuracy of measurement of the force exerted by the user will not be substantially affected by the angle at which it is exerted and concentric, eccentric and isometric muscle contractions may be exerted by the user as a single force at selected positions and angles from said guide means for resistance by the winding drum.

7. A motor-operated exercise therapy device as defined in claim 6, wherein:
said means for measuring and indicating the measurement includes deflectance means interposed against said cable,
whereby to lend a live feel to the resistance of the drum-held cable.

8. A motor-operated exercise therapy device as defined in claim 6, wherein:
the control means is adjustably positionable forwardly of the cable guide means,
whereby control by the user over the running and direction of the motor allows change of the type of muscle contractions exerted by him in opposition to the winding drum.

References Cited

UNITED STATES PATENTS

857,447	6/1907	Cooper	272—81
1,372,026	3/1921	Hulter	272—83
2,767,576	10/1956	Seney	73—144
2,881,882	4/1959	Gentile	272—79
3,135,342	6/1967	Harmes	73—144

RICHARD C. PINKHAM, *Primary Examiner.*

F. BARRY SHAY, *Examiner.*

W. R. BROWNE, *Assistant Examiner.*