Office de la Propriété Intellectuelle du Canada
Un organisme d'Industrie Canada

Canadian Intellectual Property Office
An agency of Industry Canada

CA 2104350 C 2005/01/11

(11)(21) 2 104 350

(12) BREVET CANADIEN
CANADIAN PATENT

(13) C

(22) Date de dépôt/Filing Date: 1993/08/18

(41) Mise à la disp. pub./Open to Public Insp.: 1995/02/19

(45) Date de délivrance/Issue Date: 2005/01/11

(30) Priorité/Priority: 1993/08/22 (4-245786) JP

(51) Cl.Int.^{5}/Int.Cl.^{5} H01T 4/02

(72) Inventeur/Inventor:
KASAHARA, MASATAKA, JP

(73) Propriétaire/Owner:
SHINKO ELECTRIC INDUSTRIES CO., LTD., JP

(74) Agent: CASSAN MACLEAN

(54) Titre : SEPARATEUR POUR TUBE A GAZ
(54) Title: A GAS-TUBE ARRESTER

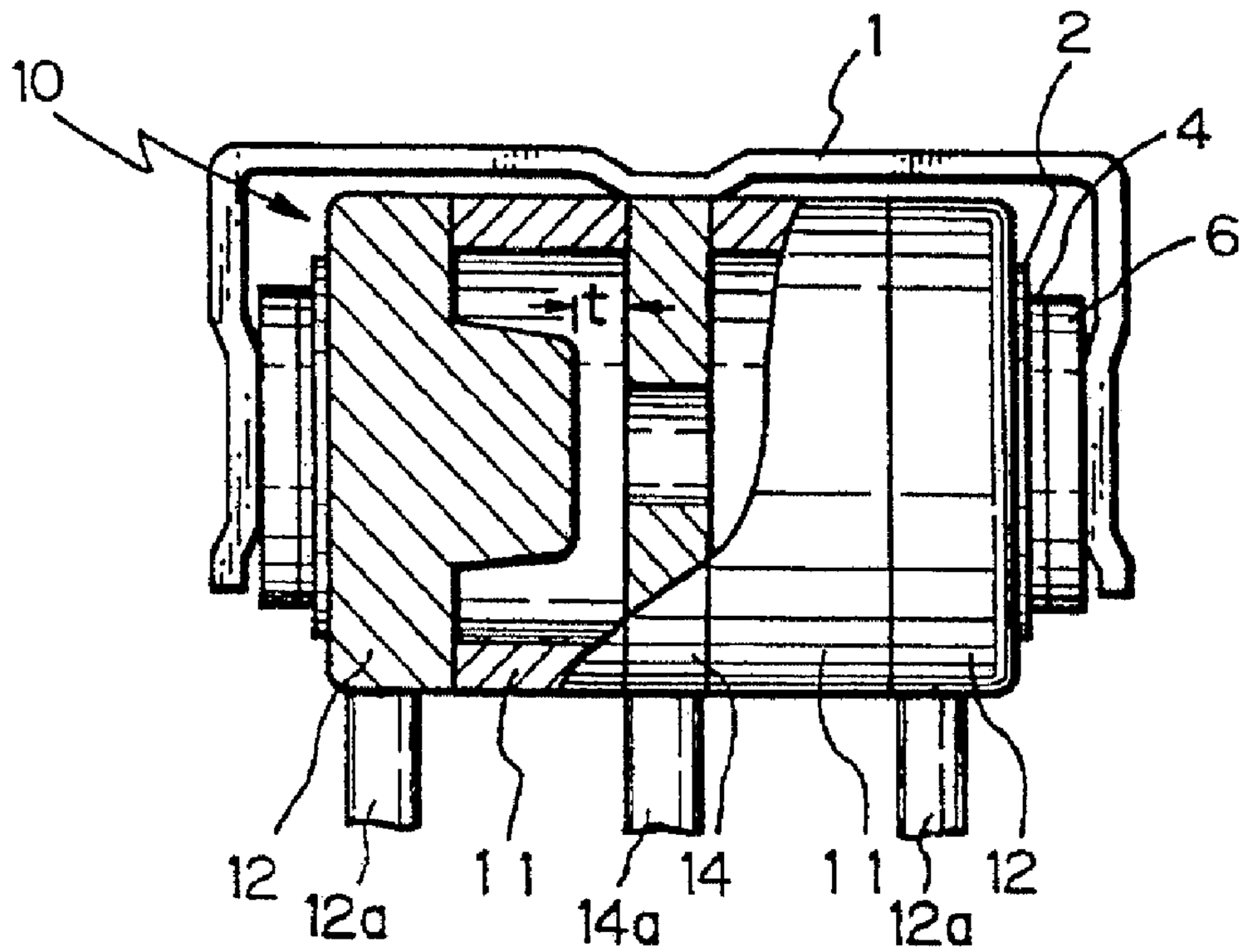

(57) Abrégé/Abstract:
A gas-tube arrester includes an arrester body in which an inert gas is contained, and first and second electrodes face to each other separated by an insulator. An insulating, heat-resistant film is in contact with the first electrode and has an opening and a plurality of small holes, a metal plate layered on the insulating film has an opening communicating with the opening of the insulating film. A low-melting point metal plate layered on the metal plate to cover the openings has a melting point lower than a decomposition or softening temperature of the insulating film. A conductive leaf spring electrically connected to the second electrode and pressing the low-melting point metal plate toward the metal plate, so that, when a high voltage is applied between the first and second electrodes, an electrical discharge occurs between the first and second electrodes through the small holes of the insulating films, and on the other hand, if the low-melting point metal plate is fused with a heat of the arrester body, the fused metal will flow through the openings to electrically connect the leaf spring to the first electrode.

ABSTRACT OF THE DISCLOSURE

A gas-tube arrester includes an arrester body in which an inert gas is contained, and first and second electrodes face to each other separated by an insulator. An insulating, heat-resistant film is in contact with the first electrode and has an opening and a plurality of small holes, a metal plate layered on the insulating film has an opening communicating with the opening of the insulating film. A low-melting point metal plate layered on the metal plate to cover the openings has a melting point lower than a decomposition or softening temperature of the insulating film. A conductive leaf spring electrically connected to the second electrode and pressing the low-melting point metal plate toward the metal plate, so that, when a high voltage is applied between the first and second electrodes, an electrical discharge occurs between the first and second electrodes through the small holes of the insulating films, and on the other hand, if the low-melting point metal plate is fused with a heat of the arrester body, the fused metal will flow through the openings to electrically connect the leaf spring to the first electrode.

2104350

A GAS-TUBE ARRESTER

BACKGROUND OF THE INVENTION

1. Field of the Invention

The present invention relates to a gas-tube arrester, and more particularly, to a gas-tube arrester in which line electrodes and an earth electrode are facing each other with insulators interposed.

2. Related Art

First of all, some examples of gas-tube arresters known in the prior art will be explained with reference to Figs. 1 to 5.

An arrester 200 shown in Fig. 1 is mounted on a telephone line or any other communication line to protect the communication equipment from a lightning or other external surge. For the arrester 200, as shown in Fig. 2, an arrester body 220, in which argon or other inert gas is gas-tightly contained and line electrodes 206 and an earth electrode 208 are arranged with insulators 210 interposed, is often employed.

If a power supply cable line (100, 200, or 6600 Volt. AC) is in contact with a telephone line repeatedly, a high voltage is repeatedly applied to the arrester body 220. Then, an electric discharge continues in the arrester body 220. Eventually, the arrester 200 may be overheated to cause a fire or other disaster.

As a precaution for preventing the arrester 200 from overheating, as shown in Figs. 1 and 2, an insulating film 204 made of polyester or other thermoplastic resin is placed between the arrester body 220 and a conductive leaf spring 202 attached on the outer circumferential surface of the arrester body 220. Thus, a fail-safe mechanism is implemented in the arrester 200.

Using the arrester 200 having this kind of fail-safe mechanism, when a high voltage is applied

repeatedly and an electric discharge continues in the arrester body 220, the arrester 200 will then be overheated. Then, the insulating film 204 made of a thermoplastic resin is fused with heat of the arrester body 220. Then, the conductive leaf spring 202 urged to the line electrodes 206 and the earth electrode 208 connects the line electrodes 206 and earth electrode 208. Therefore, the earth electrode 208 and line electrodes 206 are electrically shorted. This stops the consecutive electric discharge in the arrester body 220. Consequently, a fire resulting from the overheated arrester 200 can be avoided.

However, in the arrester 200 having only such a fail-safe mechanism as shown in Figs. 1 and 2, if the argon or other inert gas contained in the arrester body 220 leaks for some reason, even if an external surge is applied to the arrester 200, an electric discharge cannot occur in the arrester body 220. This may damage the communication equipment or some unit of a communication system.

To cope with the foregoing drawback, Japanese Unexamined Patent Publication (Kokai) No. 53-52961 (U.S. Patent No. 4212047) has proposed an arrester having both a vent-safe mechanism and a fail-safe mechanism as shown in Fig. 3.

In the arrester, insulating films 204a and 204b clamped between line electrodes 206 and a conductive leaf spring 202 electrically coupled to an earth electrode 208 have respective slits 212 and 212.

Owing to the slits 212, as shown in Fig. 4, a space the thickness of the insulating films 204a and 204b is formed between the conductive leaf spring 202 and the line electrodes 206.

In the gas-tube arrester shown in Figs. 3 and 4, a fail-safe mechanism and a vent-safe mechanism is implemented.

To be more specific, when an arrester body is

heated due to consecutive electric discharge in the arrester body, a fail-safe mechanism operates. That is to say, the insulating films made of a thermoplastic resin fuse, and a conductive leaf spring electrically connects the line electrodes and an earth electrode to stop the consecutive electric discharge. This prevents occurrence of a fire.

If argon or other inert gas contained in the arrester body leaks, discharge cannot occur in the arrester body. In this case, if an external surge is applied to the arrester, spaces formed with slits 212 on the tops of the line electrodes (Fig. 4) induce an electric discharge between the line electrodes and conductive leaf spring. Thus, a vent-safe mechanism operates.

However, in the arrester shown in Figs. 3 and 4, the temperature of the arrester body increases due to consecutive discharge. Even if the insulating films fuse to bring the conductive leaf spring into contact with the line electrodes and thus the fail-safe mechanism operates, the contact resistance is still high because the conductive leaf spring and the line electrodes are brought into contact merely with a spring force.

A temperature cycle test was conducted in the range from -40°C to +60°C to test the gas-tube arresters of this kind, in which a conductive leaf spring comes into contact with line electrodes. However, in some samples of arrester, the contact between the conductive leaf spring and line electrodes could not be attained. As a result, it was found that a fail-safe function, which is based on a permanent contact, cannot be guaranteed.

In an effort to guarantee the fail-safe function, the present inventor has tested the arrester shown in Fig. 5 which has been proposed in Japanese Unexamined Patent Publication (Kokai) No. 53-52960 (U.S. Patent No. 4062054).

In the arrester shown in Fig. 5, insulating films 205a and 205b having heat resistance (insulating film 205b is not shown) are used instead of the insulating films 204a and 204b shown in Fig. 3, and a solder plate 211 for shielding a slit 212 is placed between each of the insulating films 205a and 205b, and a conductive leaf spring 202.

The fail-safe mechanism of the foregoing arrester operates in such a manner that, when the solder plates 211 are fused with heat developed in the arrester 220, the fused solder connects between each of line electrodes 206 and the conductive leaf spring 202. This connection is achieved reliably with the fused solder. Therefore, the function of the fail-safe mechanism can make a reliable connection.

However, in the arrester shown in Fig. 5, the soft solder plates 211 are always pressed by the conductive leaf spring 202. Therefore, portions of the solder plates 202 that are shielding the slits 212 warp gradually toward the line electrodes 206. The solder plates 211 and line electrodes 206 may come into contact unexpectedly. Thus, the arrester cannot assure total reliability.

SUMMARY OF THE INTENTION

The object of the present invention is to provide an arrester capable of guaranteeing a fail-sale function and eliminating the possibility of an unexpected contact thus providing total reliability.

The present inventor has searched for a solution for achieving the foregoing object. As a result, it has been found that, in Fig. 5, if a metallic plate having slits at positions for communicating with slits 212 of the insulating films 205a and 205b is inserted between heat-resisting insulating films 205a and 205b and the solder plates 211, even when the solder plates 211 warp gradually toward the line electrodes 206, a sufficient space will remain existent between the line

electrodes 206 and the conductive leaf spring. Consequently, an expected contact of the leaf spring with the line electrodes 206 due to the warping solder plates 211 can be prevented.

To be more specific, the present invention comprises an arrester body in which line electrodes and an earth electrode are facing each other with insulators interposed, insulating films abutting on the line electrodes having openings, being made of polyimide or other heat-resisting material, metal plates layered on the insulating films having openings, being made of copper or other heat-resisting metal, low-melting point metallic plates made of solder, tin, or other low-fusing point metal that fuses at a temperature lower than a decomposition or softening temperature of a heat-resisting material made into the insulating films, and a conductive blade spring electrically coupled to the earth electrode and pressing the low-melting point metallic plates to the heat-resisting metallic plates so as to shield the openings of the heat-resisting metallic plates. Communicating holes each made up of a pair of openings bored in each of the insulating films and each of the metal plates are provided so that when the low-fusing point metallic plates are fused with heat of the arrester body, fused low-melting point metal flows in to electrically couple the conductive blade spring and line electrodes.

In the present invention having the foregoing construction, the arrester contains gas. In each of the insulating films, a ring of a plurality of small holes is formed in a portion that is in contact with each of the heat-resisting metallic plates. Thus, a fail-safe mechanism and a vent-safe mechanism are implemented.

A small hole is bored in each of portions of the low-melting point metallic plates that are shielding the openings of the metal plates. Therefore, when fused low-melting point metal flows into communicating holes, air

2104350

in the communicating holes can be evacuated through the small hole. This smooths the inflow of the fused low-melting point metal to the communication holes.

According to the present invention, the openings bored in heat-resisting insulating films and heat-resisting metallic plates communicate. Spaces formed between low-melting point metallic plates and line electrodes are larger than those in a conventional arrester using insulating films alone. Therefore, even when the low-melting point metallic plates warp due to pressure of the conductive blade spring, the low-melting point metallic plates and line electrodes will not come into contact.

When consecutive discharges occur, if the arrester is overheated, the low-melting point metallic plates fuse to connect the line electrodes and conductive blade spring reliably. Consequently, the earth electrode and line electrodes are connected permanently.

As a result, the arrester according to the present invention can guarantee a fail-safe function and provide high reliability.

BRIEF DESCRIPTION OF THE DRAWINGS

Figure 1 is a perspective view of a conventional gas-tube arrester;

Figure 2 is an assembly diagram of the arrester shown in Fig. 1;

Figure 3 is an assembly diagram of a gas-tube arrester described in Japanese Unexamined Patent Publication (Kokai) No. 53-52960 (Specification in U.S. Patent No. 4062054);

Figure 4 is a cross-sectional diagram of an arrester in Fig. 3;

Figure 5 is a cross-sectional diagram showing a known gas-tube arrester described in Japanese Unexamined Patent Publication (Kokai) No. 53-52960 (Specification in U.S. Patent No. 4062054);

Figure 6 is a partially cross-sectional, front view

of a gas-tube arrester of an embodiment of the present invention;

Figure 7 is a cross-sectional diagram showing a main part of the arrester shown in Fig. 6;

Figure 8 is a plan view of an insulating film;

Figure 9 is a plan view of a heat-resisting metallic plate; and

Figure 10 is a plan view of a low-melting point metallic plate.

DESCRIPTION OF THE PREFERRED EMBODIMENTS

The preferred embodiments of the present invention will now be described in detail with reference to the accompanying drawings.

Figure 6 is a partially cross-sectional, front view of a gas-tube arrester according to the present invention. In an arrester body 10 in which a pair of line electrodes 12, 12 and a central earth electrode 14 are symmetrically arranged with a pair of insulators 11, 11, respectively, interposed therebetween. In this arrester body 10, the line electrodes 12 extend into the arrester body 10.

The line electrodes 12, 12 and the earth electrode 14 can be connected to the telephone line (not shown) and the ground by means of leads 12a and 14a, respectively. In the arrester body 10, argon or any other inert gas is gas-tightly contained. If a high voltage is applied between the line electrodes 12 and the earth electrode 14, an electrical discharge will take place in gaps t (t = 0.5 mm to 1.0 mm) therebetween.

To each of the line electrodes 12, 12 on the sides of the arrester body 10, an insulating film 2 made of a polyimide resin or a heat-resisting resin, a metal plate 4 made of copper, and a low-melting point metallic plate 6 made of solder containing silver are attached and clamped by the end of a substantially U-shaped conductive leaf spring 1.

The leaf spring 1 is made of phosphor bronze or

stainless steel. The center of the leaf spring 1 is spot-welded to the earth electrode 14. Thus, the leaf spring 1 is firmly secured to the arrester body 10.

Fig. 7 shows a cross-section of a laminate section made up of the insulating film 2, a heat-resisting metallic plate 4, and a low-melting point metallic plate 6, which are layered on each of the ends of an arrester body 10.

As shown in Figs. 8 and 9 circular openings 3 and 5 are bored in the centers of the insulating film 2 and metal plate 4, respectively. The insulating film 2 and heat-resisting metallic plate 4 are arranged so that the openings 3 and 5 communicate each other. The opening 5 of the metal plate 4 are shielded with a low-melting point metallic plate 6 which is pressed by a leaf spring 1.

Therefore, a space having a total of thicknesses of the insulating film 2 and the metal plate 4 is formed as an air gap for a fail-safe mechanism between the low-melting metallic plate 6 and the line electrode 12.

Preferably, the total of the thicknesses of the insulating film 2 and metal plate 4 should range from 100 to 1,000 μm. If the total thickness is less than 100 μm, the space between a warped low-melting point metallic plate 6, occurring due to pressure of the leaf spring 1, and the line electrode 12 becomes too small. On the other hand, when the total thickness exceeds 1,000 μm, the space will be so large that the fail-safe function tends to fail.

In this embodiment, in order to reduce a warp of the low-melting point metallic plate 6 due to pressure concentrated on the portion of the low-melting point metallic plate 6 that is shielding the opening 5 of the metal plate 4, the leaf spring 1 is arranged so that the portion of the low-melting point metallic plate 6 on which the pressing section of the blade spring 1 abuts and presses will cover both the opening 5 of the metal

plate 4 and the circumference of the opening 5.

When the arrester of this embodiment is overheated due to consecutive electric discharges occurring in the arrester body 10, the heat of the arrester body 10 is transferred to the low-melting point metallic plates 6 via the insulating films 2 and metal plates 4, then fuses the low-melting point metallic plates 6.

Fused low-melting point metal flows into communication holes each made up of a pair of the openings 5 and 3, bored in each of the insulating films 2 and each of the metal plates 4, owing to a pressing force of the leaf spring 1, thus reliably connecting the leaf spring 1 and line electrodes 12 to each other. In addition, redundant fused low-melting point metal that has oozed out from the communication holes flows out along the outer circumferences of the insulating films 2 and works as supplementary couplers for the line electrodes 12 and the leaf spring 1.

Then, the earth electrode 14 and line electrodes 12 are short-circuited to stop consecutive discharge in the arrester body 10. Thus, a fire resulting from overheating of the arrester body 10 can effectively be avoided.

Since at least one small hole 6a is bored in the portion of the low-melting point metallic plates 6 that is shielding the opening 5 of the metal plate 4, when the fused low-melting point metal flows into the communication holes each made up of a pair of the openings 5 and 3 bored in each of the insulating films 2 and each of the metal plates 4, air in the communication holes can be evacuated through such a small hole 6a. This smooths the inflow of fused low-melting point metal into the communication holes. It is also preferable that the leaf spring 1 has such a small hole 1a at a position corresponding to the small hole 6a.

The connections between the leaf spring 1 and line electrodes 12 remain firm by means of the low-melting

point metals, even when the arrester body 10 is cooled down after the consecutive discharge stops. The connections withstand a temperature cycle test conducted in the range of -40°C to +60°C.

In this embodiment, a plurality of small holes 8 are formed on each of insulating films 2 abutting on the metal plates 4. The small holes 8 provide a vent-safe function. To be more specific, when argon gas or any other gas contained in the arrester body 10 leaks for some reasons and an electric discharge cannot occur in the arrester body 10, if an external surge is applied to the arrester body 10, spaces of the small holes 8 each having a diameter of about 0.2 mm to 0.4 mm induce an electric discharge between the metal plates 4 and the line electrodes 12.

It is, therefore, preferred that each of the insulating films 2 has a thickness of 50 to 99 μm ensuring the occurrence of electric discharge.

Furthermore, in this embodiment, each of insulating films 2 has a larger area (larger diameter) than each of metal plates 4, and each of openings 3 of the insulating films 2 has a smaller area (smaller diameter) than each of openings 5 of the metal plates 4. Therefore, the outer and inner circumferences of the metal plates 4 can be positioned inside those of the insulating films 2. Therefore, the metal plates 4 connected to a leaf spring 1 via low-melting point metallic plates 6 can be separated from line electrodes 12 so that an electric discharge will not occur. That is to say, an unstable state, in which electric discharge may occur between the outer or inner circumferences of the metal plates 4 and the line electrodes 12, will be prevented.

In the gas-tube arrester of this embodiment, an electric discharge occurs only in the spaces of small holes 8 arranged around the central opening 3. This helps stabilize a discharge start voltage and ensures a vent-safe function.

As described above, in the gas-tube arrester of this embodiment, sections serving as a vent-safe mechanism and a fail-safe mechanism are constituted separately as the small holes 8 and the low-melting point metal plates 6, respectively. Therefore, various means can be installed to exploit vent-safe and fail-safe functions constantly and reliably.

In an arrester described above and shown in Figs. 6 and 7, the insulating film 2, the metal plate 4, and the low-melting point metallic plate 6 are layered on each of the side planes of an arrester body 10. However, as shown in Fig. 3, the insulating film 2, the metal plate 4, and the melting point metallic plate 6 may be layered on each of line electrodes formed over a cylindrical surface of the arrester body 10. In this case, as the metal plate 4, a metallic plate capable of being curved easily along the line electrodes should preferably be adopted. Thus, the heat-resisting metallic plates can be in close contact with the insulating films curving along the line electrodes and, thereby, the air gaps providing fail-safe and vent-safe functions can be held constant. This ensures constant fail-safe and vent-safe functions.

As for a polyimide resin made into insulating films 2, an aromatic polyimide resin having a decomposition temperature of 400°C and a thermal deformation temperature of 360°C is preferred. Alternatively, any heat-resisting resin whose thermal deformation temperature is higher than that of the low-melting point metal plates 6 is usable. The usable heat-resisting resin includes a polyamideimide resin, a polyetherimide resin or the like.

Other heat-resisting material usable for the insulating films 2 includes a mica and other inorganic materials. Insulating films 2 made of an inorganic material are preferable, because they do not deform even at a very high temperature.

For the low-melting point metal plates 6, any low-melting point metals which fuse at temperatures lower than the thermal deformation temperature of insulating films 2 can be employed. Metals whose melting points range from 200 to 300°C are preferred. The preferable low-melting point metal preferably includes solder containing silver.

Figs. 8, 9 and 10 are plan views of the ring-shaped insulating film 2, the ring-shaped metal plate 4 and the low-melting point metallic plate 6, respectively. The insulating film 2 has preferably a thickness of 50 μm, an outer diameter of 5 mm and an inner diameter of 3 mm, and also has a plurality of small vent holes 8 arranged amount the central opening 3, each hole 8 having a diameter of 0.2 - 0.6 mm.

The metal plate 4 has preferably a thickness of 0.2 mm, an outer diameter of 4.8 mm and an inner diameter of 3.2 mm. The low-melting point metallic plate 6 has preferably a thickness of 0.3 to 0.4 mm and a diameter of 4.8 mm, and also preferably has a central hole 6a having a diameter of 0.3 to 0.4 mm.

According to the present invention as described above, a fail-safe function can be implemented reliably. This eventually improves the reliability of a gas-tube arrester.

The embodiments of the invention in which an exclusive property or privilege is claimed are defined as follows:

1. A gas-tube arrester comprising:

an arrester body in which an inert gas is contained, and first and second electrodes face to each other with an insulator therebetween;

an insulating, heat-resistant film being in contact with said first electrode, said insulating film having an opening and a plurality of small holes arranged around said opening;

a first metal plate layered on said insulating film, said first metal plate having an opening communicating with said opening of said insulating film;

a second, low-melting point metal plate layered on said first metal plate to cover said openings, said second metal plate having a melting point lower than a decomposition or softening temperature of said insulating film;

a conductive leaf spring electrically connected to said second electrode and pressing said second metal plate toward said first metal plate, so that, when a high voltage is applied between said first and second electrodes, an electrical discharge occurs between said first electrode and said first metal plate through said small holes of the insulating films, and on the other hand, if said second metal plate is fused with a heat of said arrester body, the fused, second metal will flow through said openings to electrically connect said leaf spring to said first electrode.

2. A gas-tube arrester as set forth in claim 1, wherein said first electrode is a line electrode and said second electrode is an earth electrode.

3. A gas-tube arrester as set forth in claim 1, wherein said insulating, heat-resistant film is made of polyimide.

4. A gas-tube arrester as set forth in claim 1, wherein said first metal plate is made of copper.

5. A gas-tube arrester as set forth in claim 1, wherein said second, low-melting point metal plate is made of solder, tin, or any other low-melting point metals.

6. A gas-tube arrester as set forth in claim 1, wherein said second metal plate has a small opening at a position where said second metal plate covers said opening of said first metal plate.

7. A gas tube arrester as set forth in claim 1, wherein said insulating film has a larger area or diameter than said first metal plate and said opening of the insulating film has a smaller area or diameter than said opening of the first metal plate.

8. A gas-tube arrester comprising:

a cylindrical arrester body in which an inert gas is contained, and a pair of first electrodes arranged at respective sides of said arrester body and a second, central electrode arranged therebetween to face said first electrodes separated by a pair of insulators, respectively;

a pair of ring-shaped insulating, heat-resistant films being in contact with said first electrodes, respectively, each of said insulating films having a central opening and a plurality of small holes arranged around said central opening;

a first pair of ring-shaped, metal plates layered on said insulating films, respectively, each of said first metal plates having a central opening communicating with said central opening of said insulating film;

a second pair, low-melting point metal plates layered on said first metal plates to cover said openings, respectively, each of said second metal plates having a melting point lower than a decomposition or softening temperature of said insulating films;

a substantially U-shaped conductive leaf spring electrically connected to said second electrode

and symmetrically pressing said second metal plates inward to said first metal plates, respectively, so that, when a high voltage is applied between said first and second electrodes, an electrical discharge occurs between said first electrode and said first metal plate through said small holes of the insulating films, and on the other hand, if said second metal plate is fused with a heat of said arrester body, the fused, second metal will flow through said openings to electrically couple said leaf spring to said first electrode.

9. A gas-tube arrester as set forth in claim 8, wherein said first electrodes are line electrodes and said second electrode is an earth electrode.

10. A gas-tube arrester as set forth in claim 8, wherein each of said insulating, heat-resistant films is made of polyimide.

11. A gas-tube arrester as set forth in claim 8, wherein each of said first, metal plates is made of copper.

12. A gas-tube arrester as set forth in claim 8, wherein each of said second, low-melting point metal plates is made of solder, tin, or any other low-melting point metal.

13. A gas-tube arrester as set forth in claim 8, wherein each of said second metal plates has a small opening at a position where said second metal plate covers said opening of said first metal plate.

14. A gas-tube arrester as set forth in claim 13, wherein said U-shaped conductive leaf spring has a pair of small openings corresponding to said small opening of said second metal plate.

15. A gas tube arrester as set forth in claim 8, wherein said insulating film has a larger area or diameter than said firs metal plate and said opening of the insulating film has a smaller area or diameter than said opening of the first metal plate.

2104350

Fig. 1 PRIOR ART

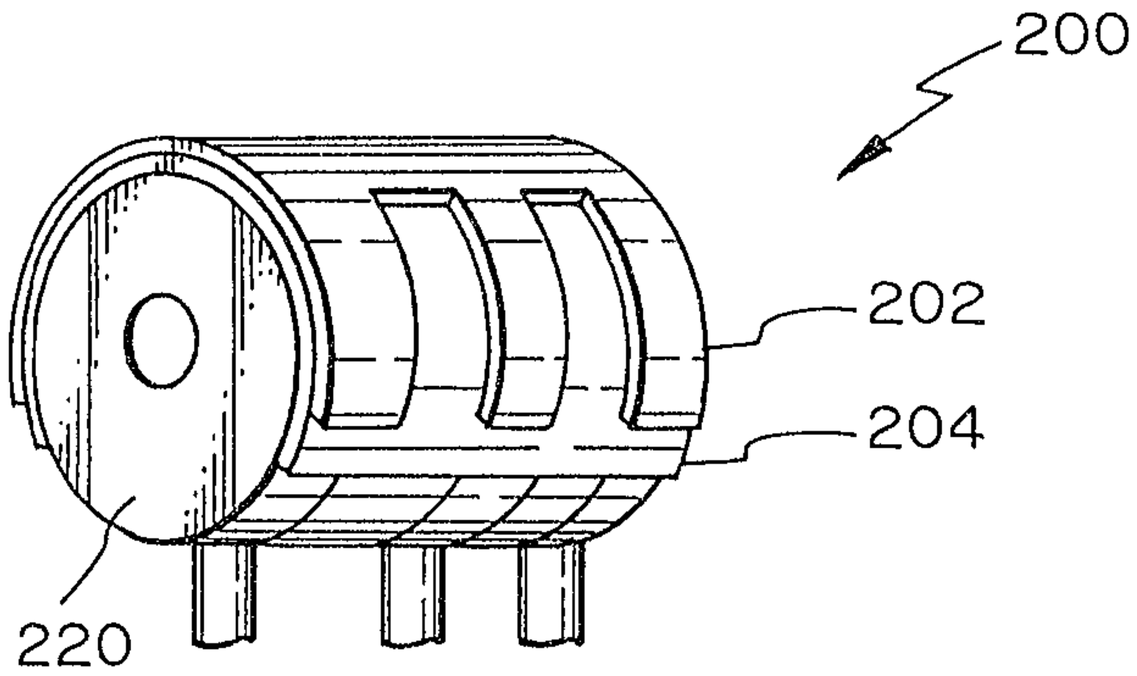

Fig. 2 PRIOR ART

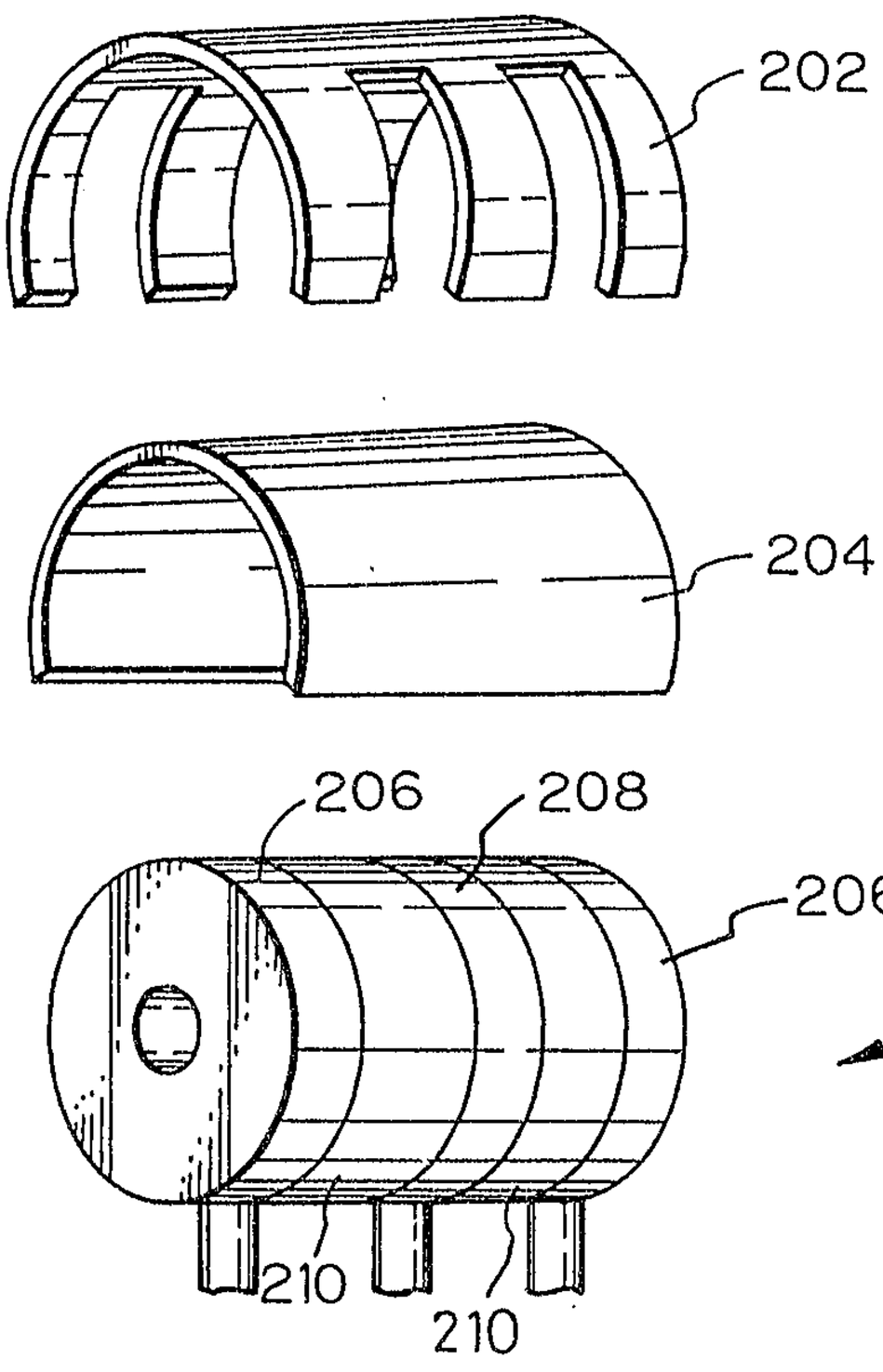

Barrigar & Oyen
Agents for the Applicant

Fig. 3
PRIOR ART

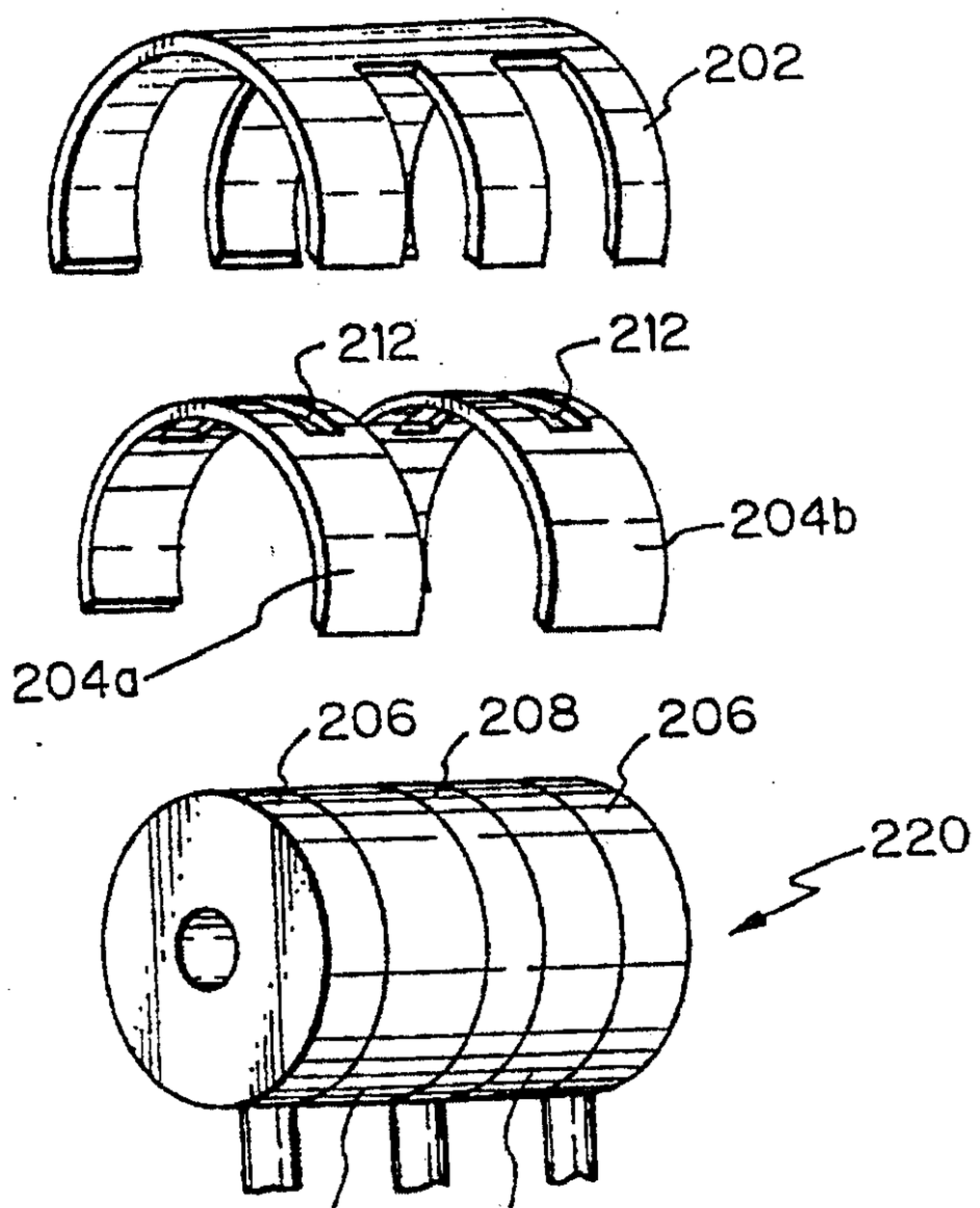

Fig. 4
PRIOR ART

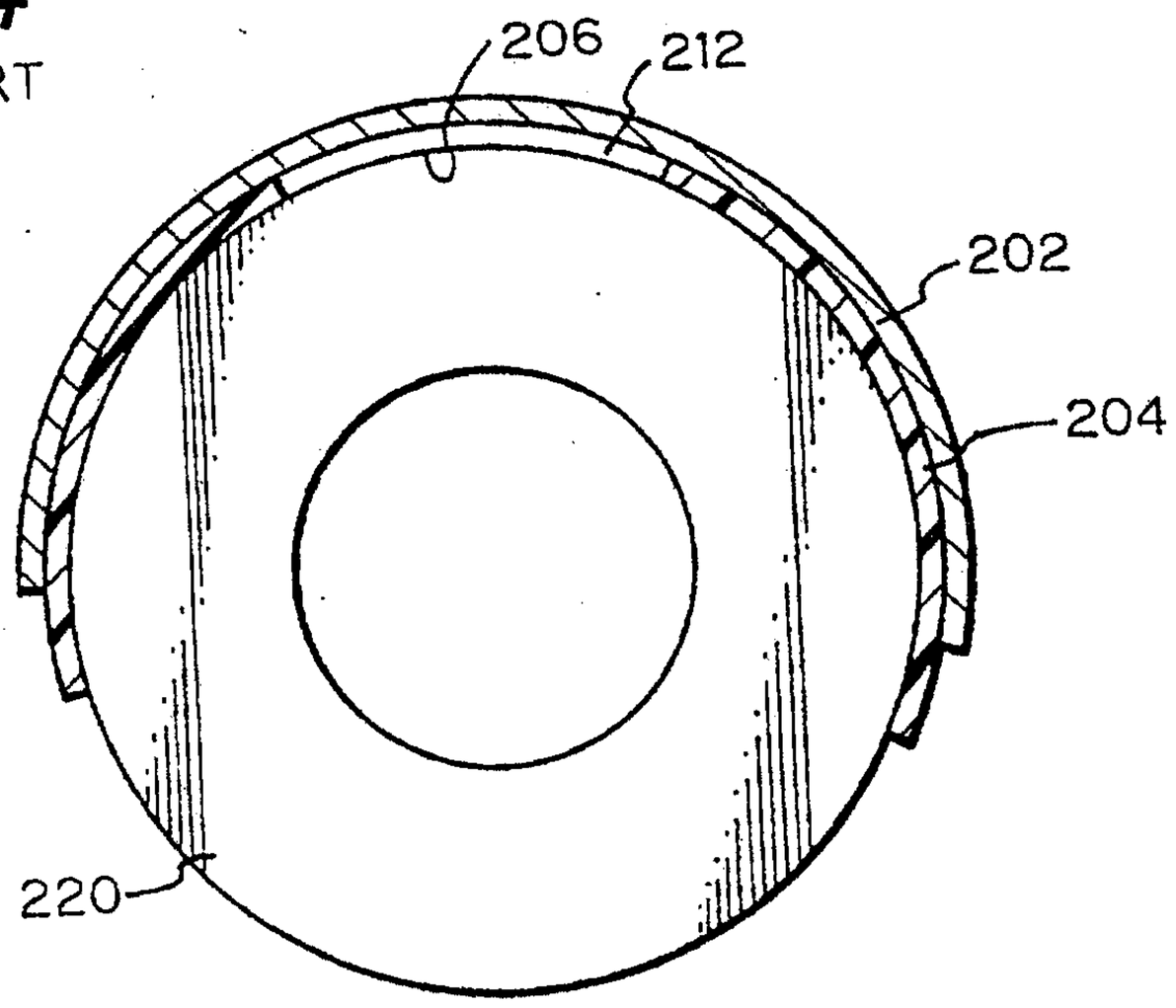

Fig. 5 PRIOR ART

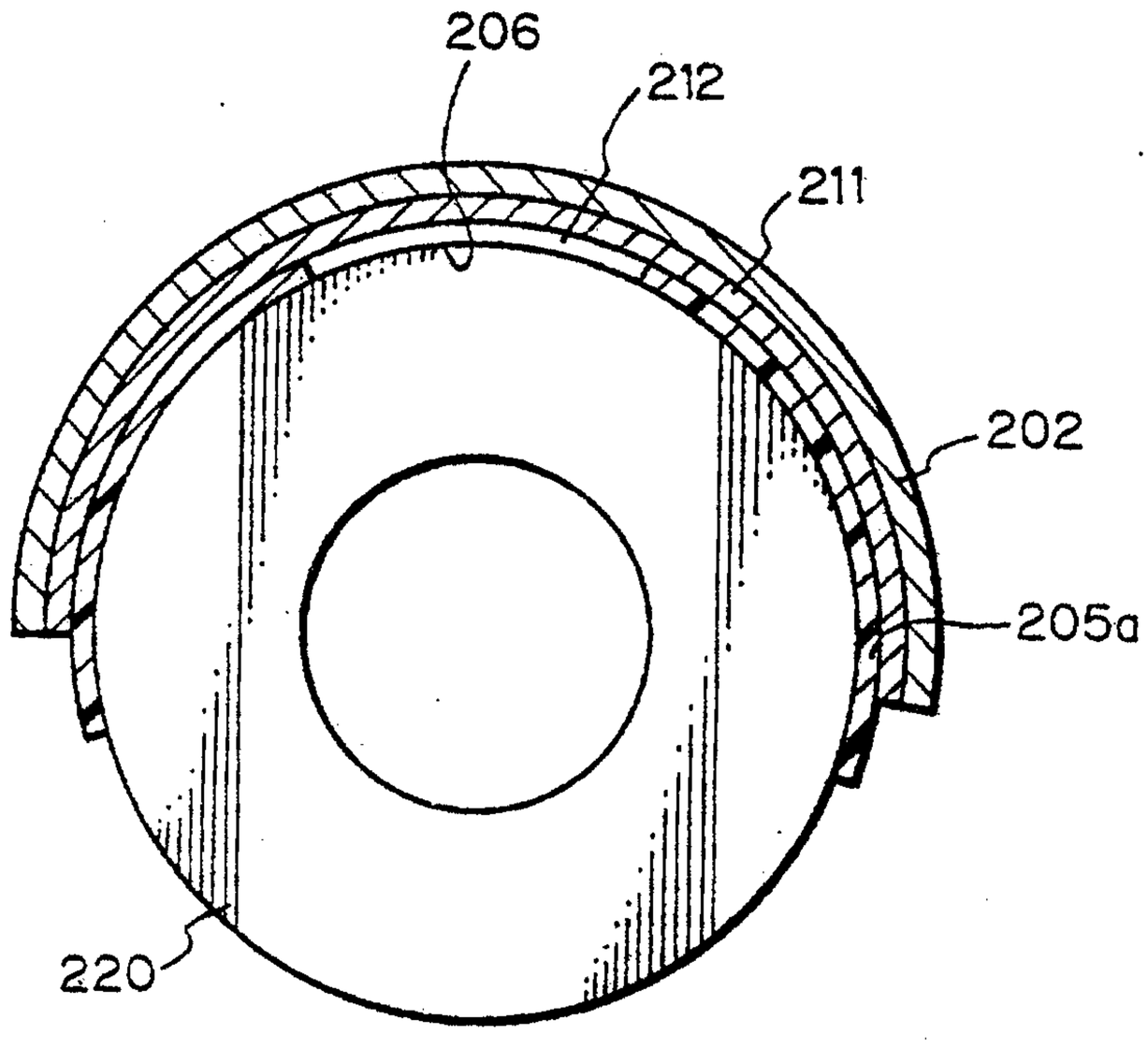

Fig. 6

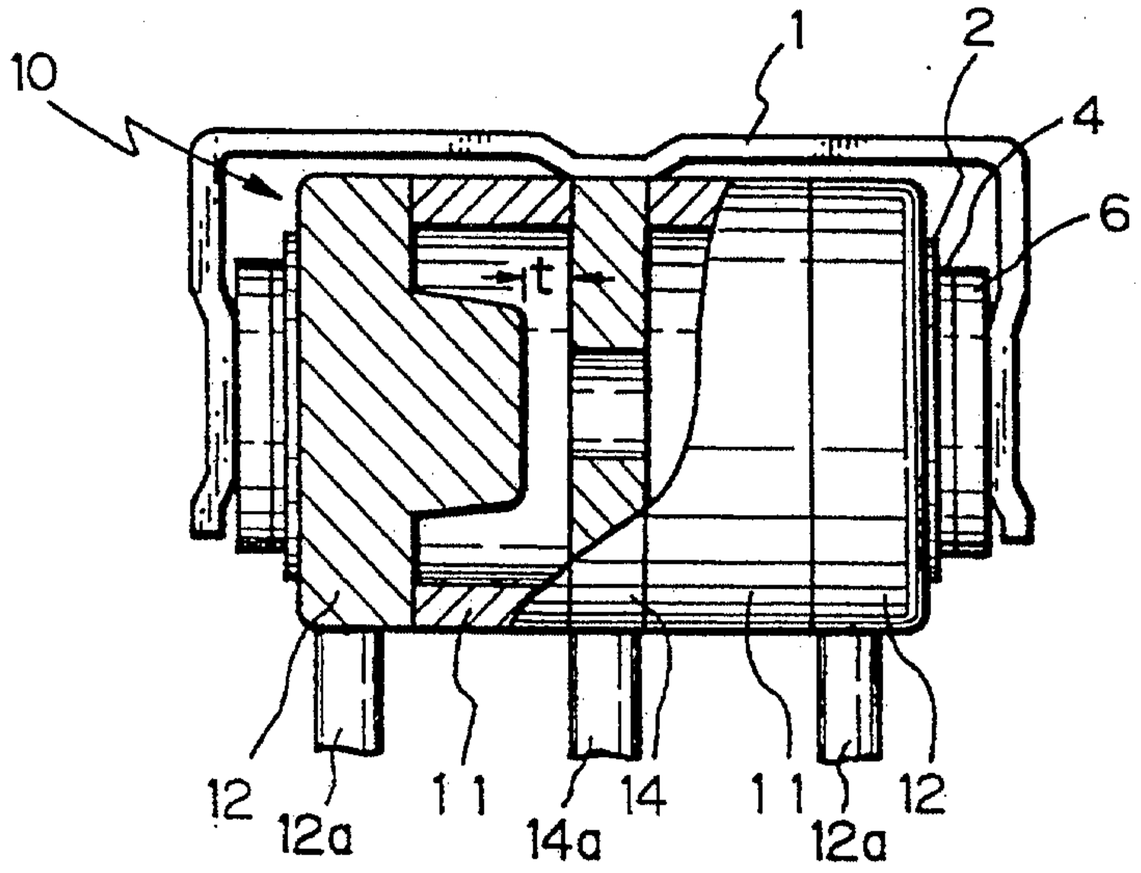

Fig. 7

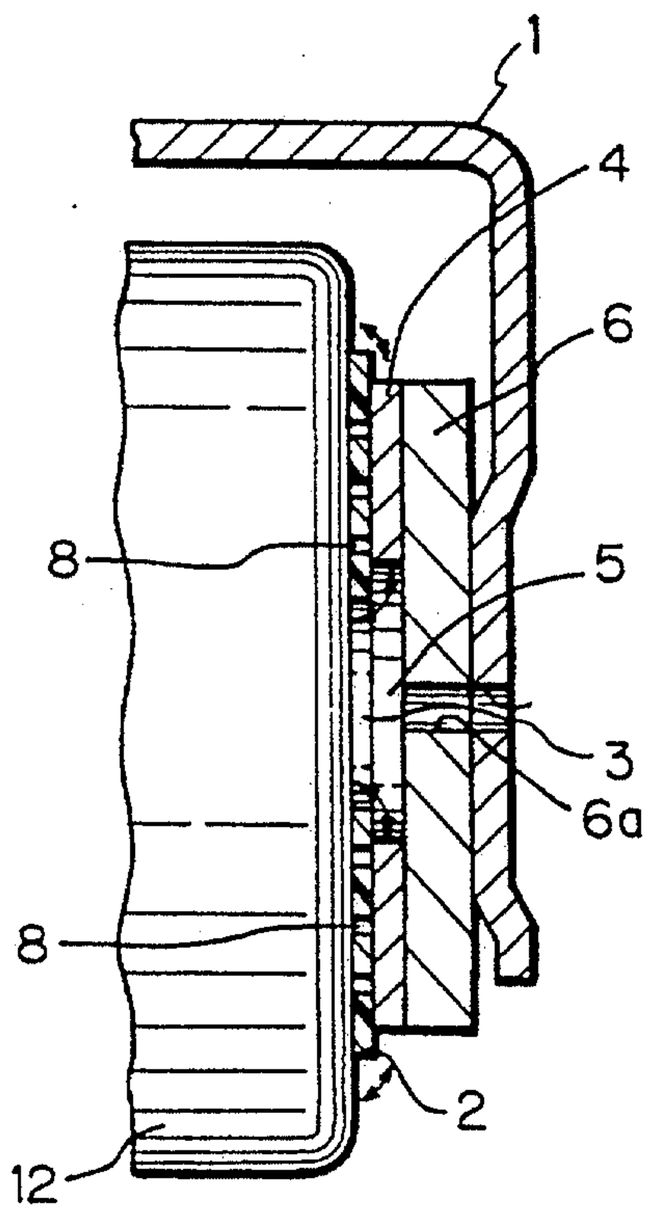

Fig. 8

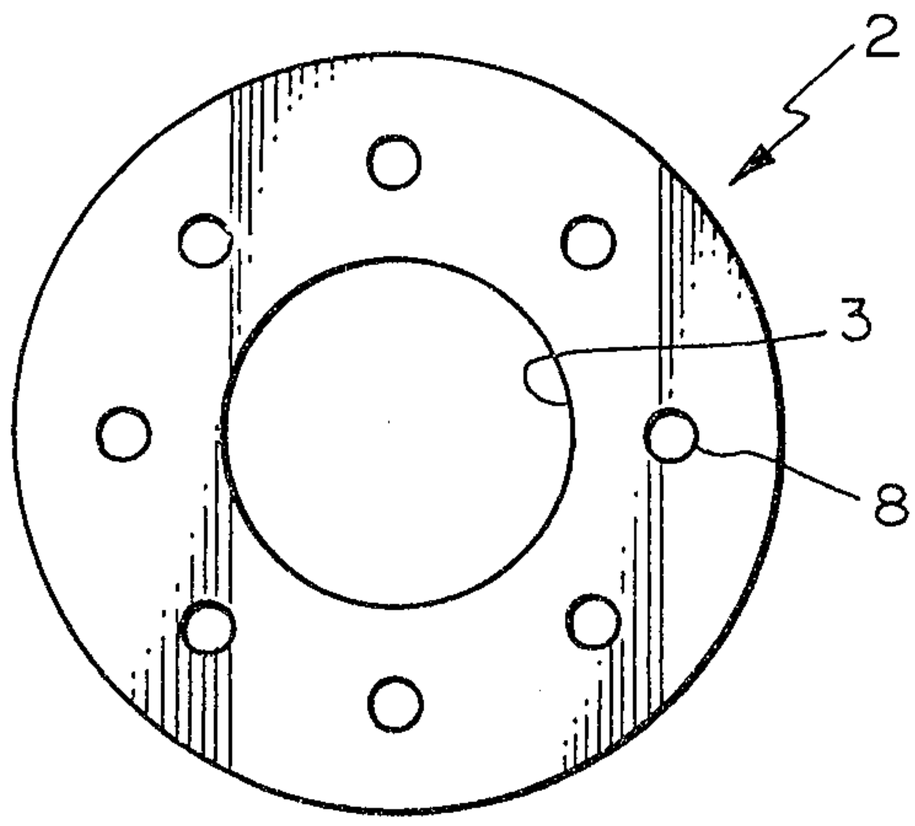

Fig. 9

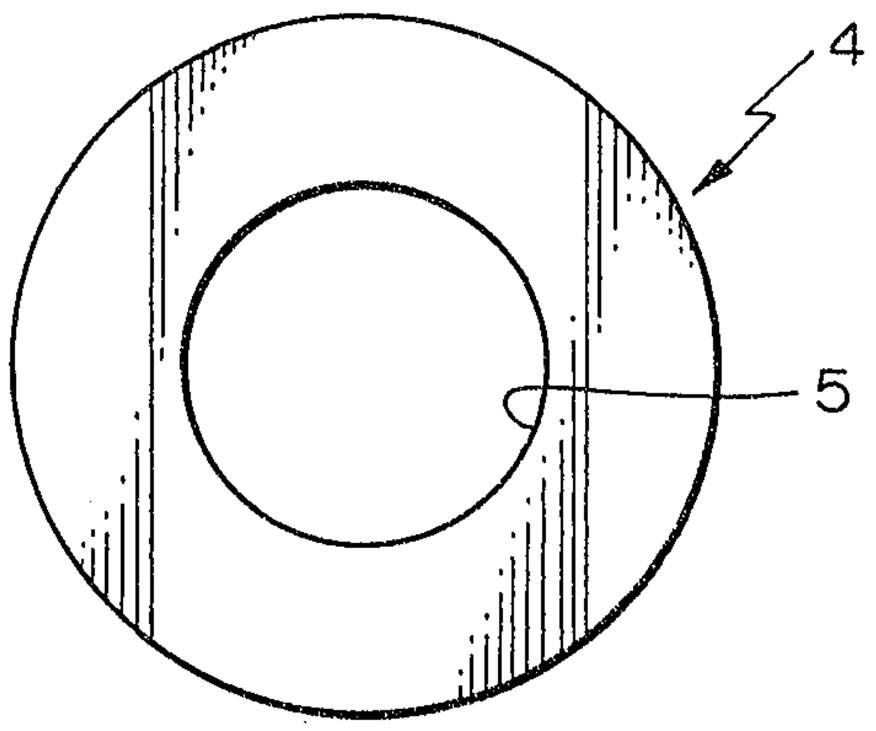

Fig. 10

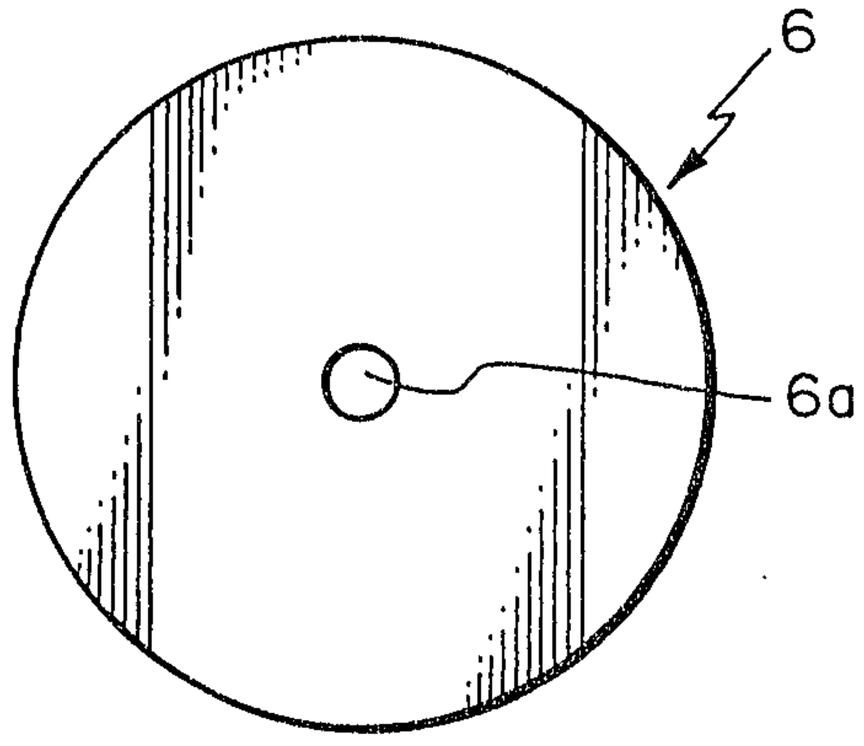

Barnigan & Open
Agents for the Applicant

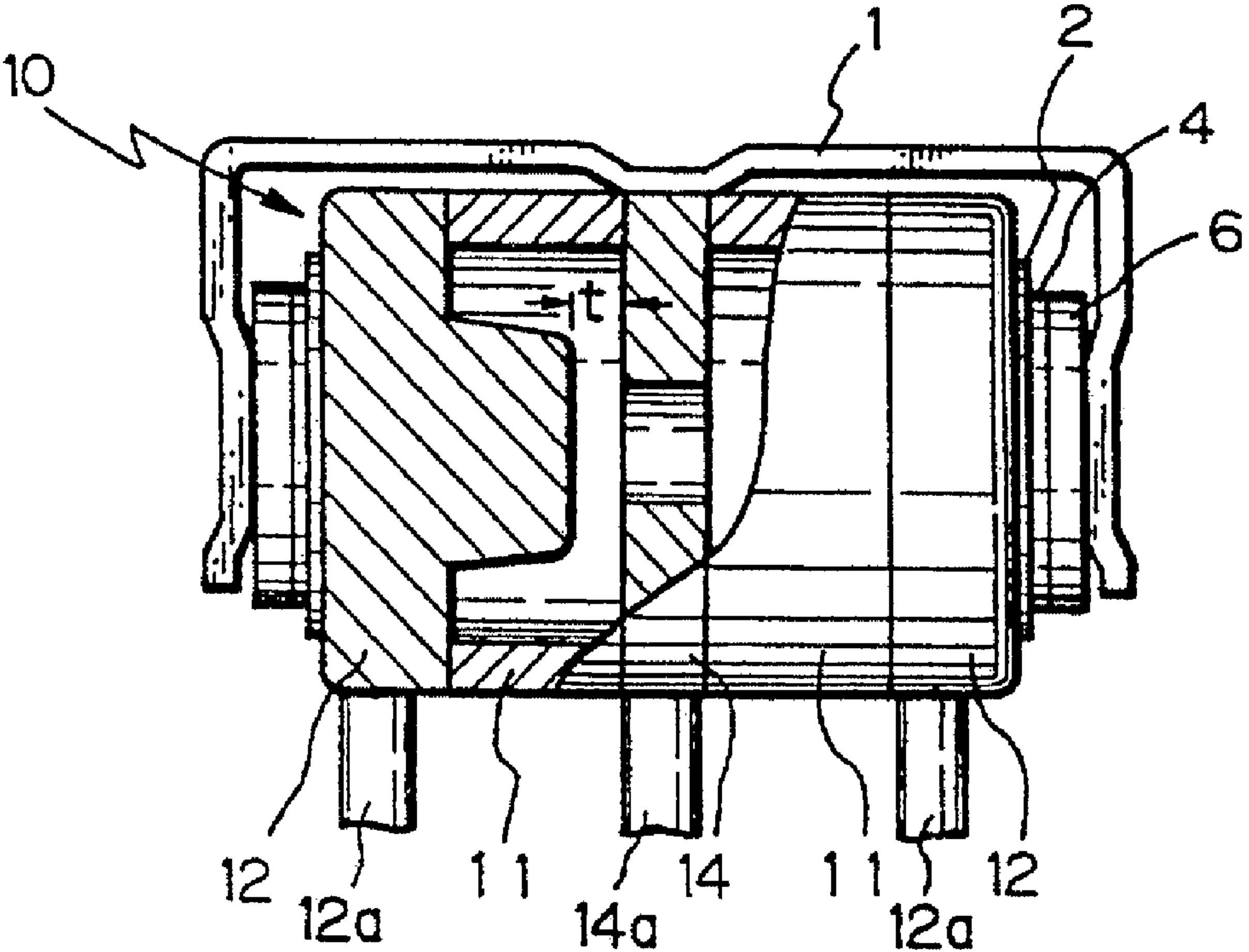
10
1
2
4
6
t
12
12a
11
14a
14
11
12a
12