US 20090229911A1

(19) United States

(12) Patent Application Publication

(10) Pub. No.: US 2009/0229911 A1

(43) Pub. Date: Sep. 17, 2009

Scotti et al.

(54) VARIABLE GEOMETRY MUFFLER FOR AN EXHAUST SYSTEM OF AN INTERNAL COMBUSTION ENGINE

(75) Inventors: **Alessandro Scotti**, Modena (IT); **Antonino Fiumano'**, Torino (IT); **Matteo Sbarile**, Cascine Vica-Rivoli (IT)

Correspondence Address:
BAKER & DANIELS LLP
111 E. WAYNE STREET
SUITE 800
FORT WAYNE, IN 46802 (US)

(73) Assignee: **MAGNETI MARELLI SISTEMI DI SCARICO S.P.A.**, Corbetta (IT)

(21) Appl. No.: **12/469,059**

(22) Filed: **May 20, 2009**

Related U.S. Application Data

(63) Continuation of application No. 11/961,388, filed on Dec. 20, 2007.

(30) **Foreign Application Priority Data**

Dec. 29, 2006 (EP) 06425877.5

Publication Classification

(51) **Int. Cl.**
F01N 1/08 (2006.01)
F01N 1/00 (2006.01)

(52) **U.S. Cl.** **181/241**; 181/269

(57) **ABSTRACT**

A variable geometry muffler for an exhaust system of an internal combustion engine; the muffler displays: a tubular body, which displays an inlet opening, an outlet opening and a labyrinth which determines a path for the exhaust gases from the inlet opening to the outlet opening; and a bypass valve, which is arranged within the tubular body to modify the geometry of the labyrinth according to the exhaust gas pressure; the bypass valve displays a lid, which is coupled to a bypass opening and is mobile from a closed position of the bypass opening to an opening position of the bypass opening by effect of the exhaust gas pressure and against the bias of an elastic body which tends to maintain the lid in the closed position; the elastic body consists of an elastic foil, which is folded as a "U" and displays a mobile end which supports the lid and a fixed end which is opposite to the mobile end and which is integral with a fixed part of the muffler.

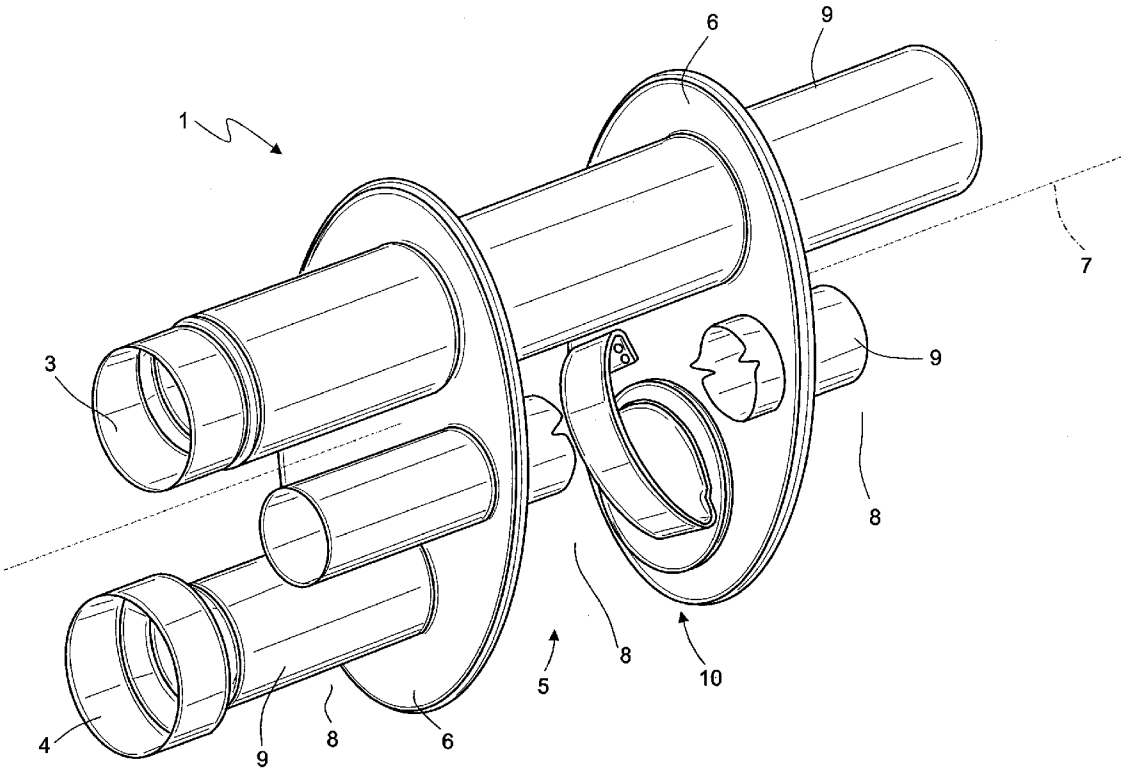

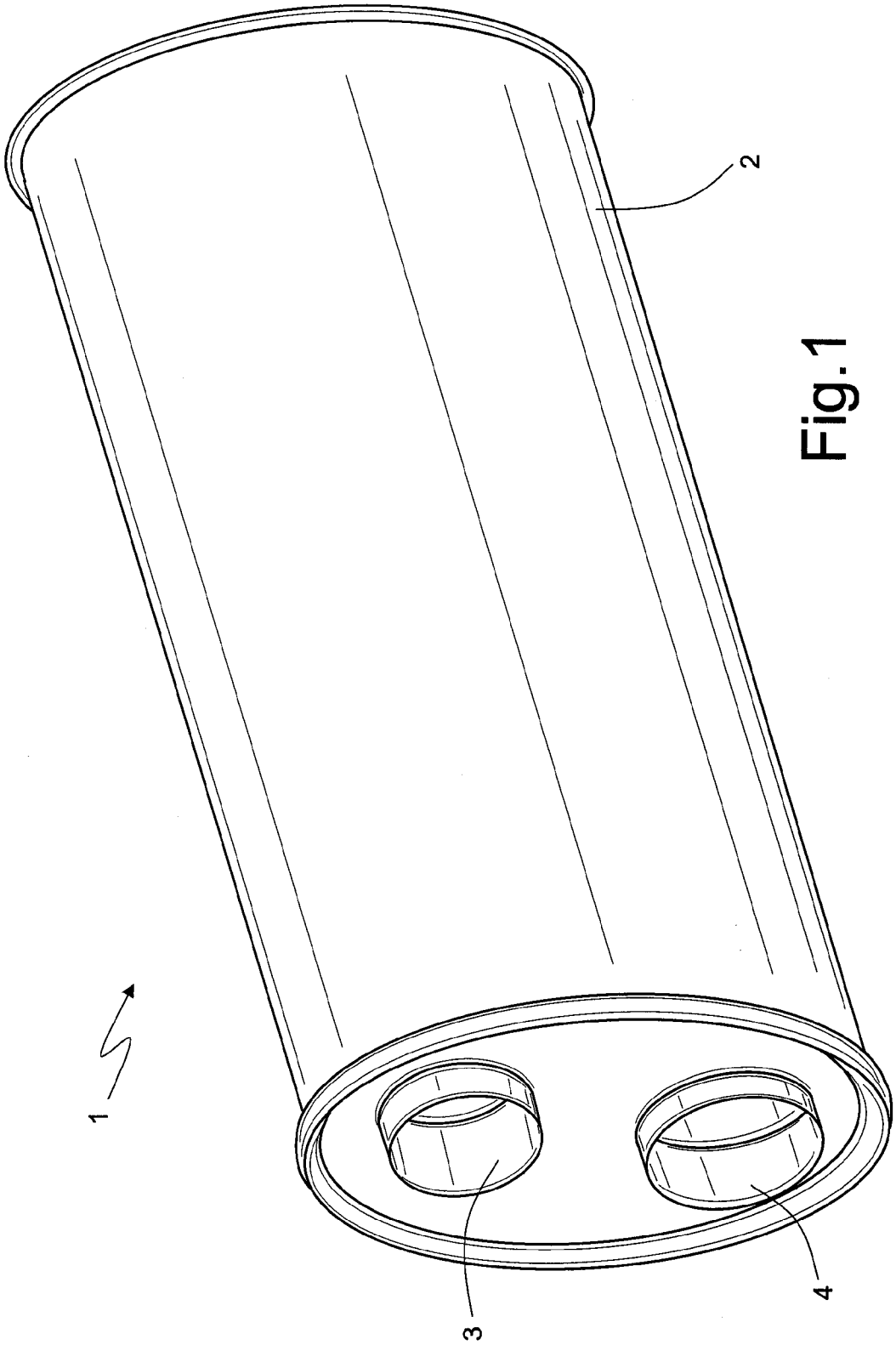

Fig.1

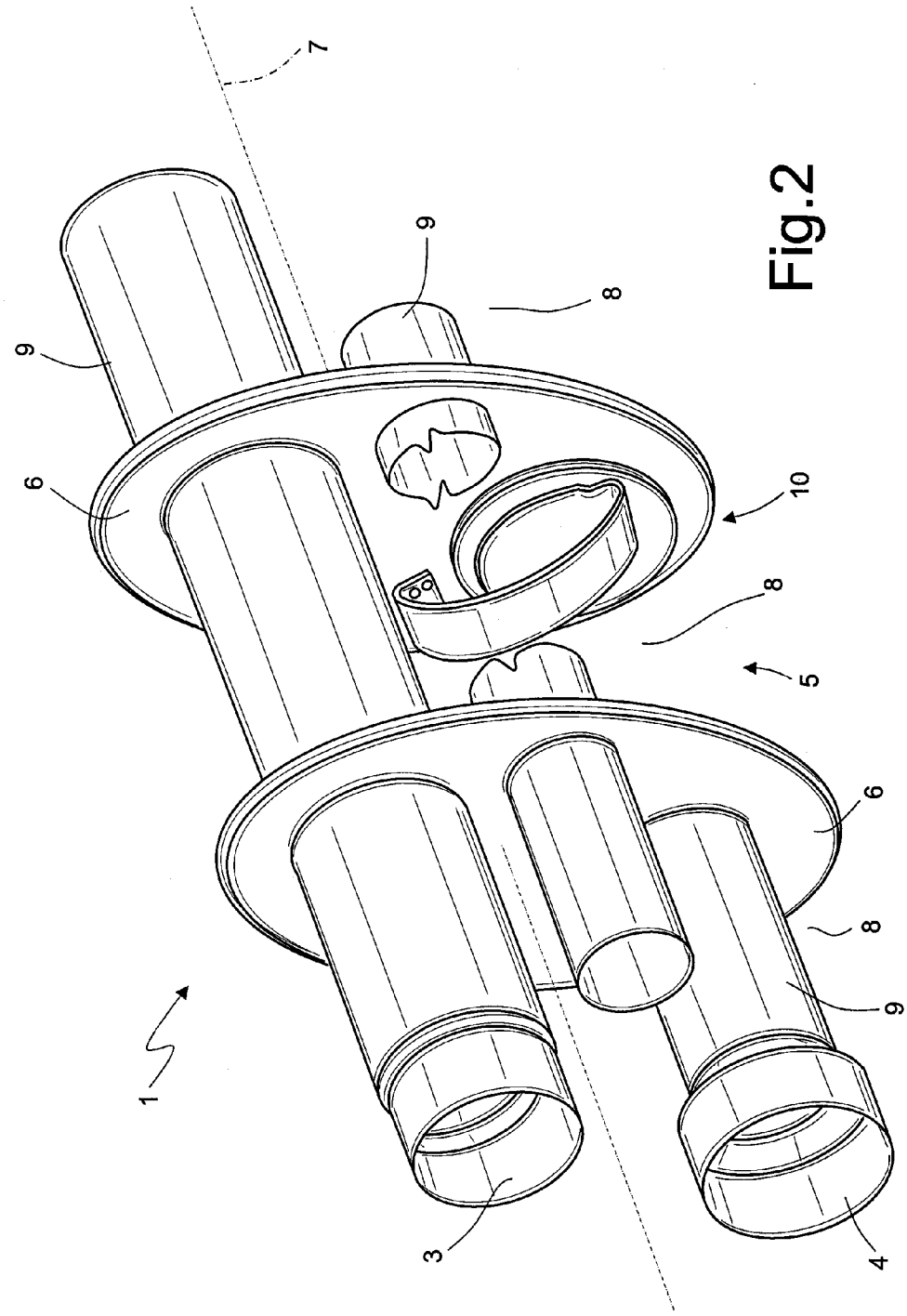

Fig.2

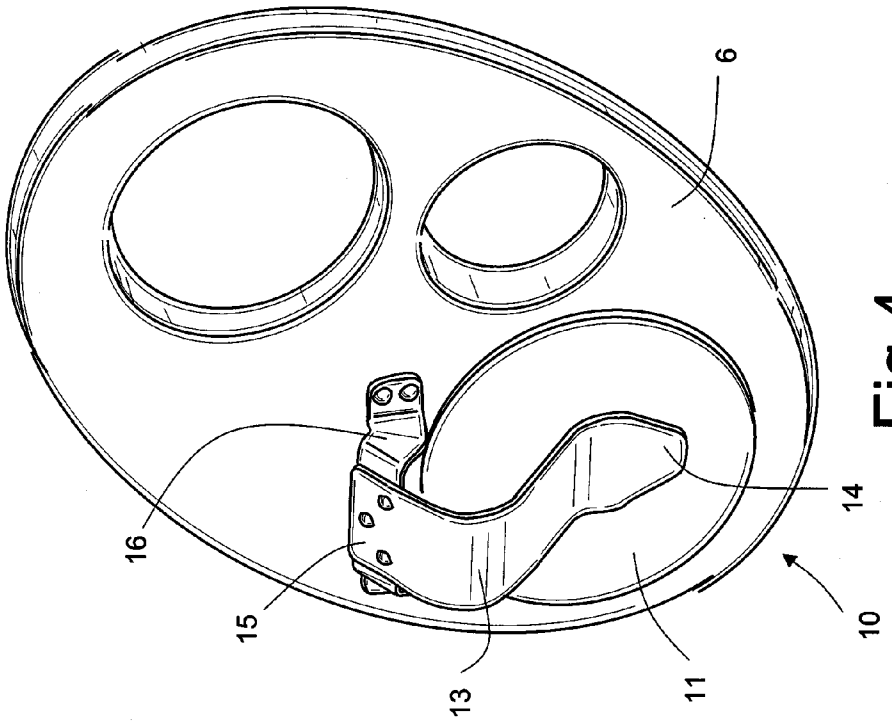

Fig.4

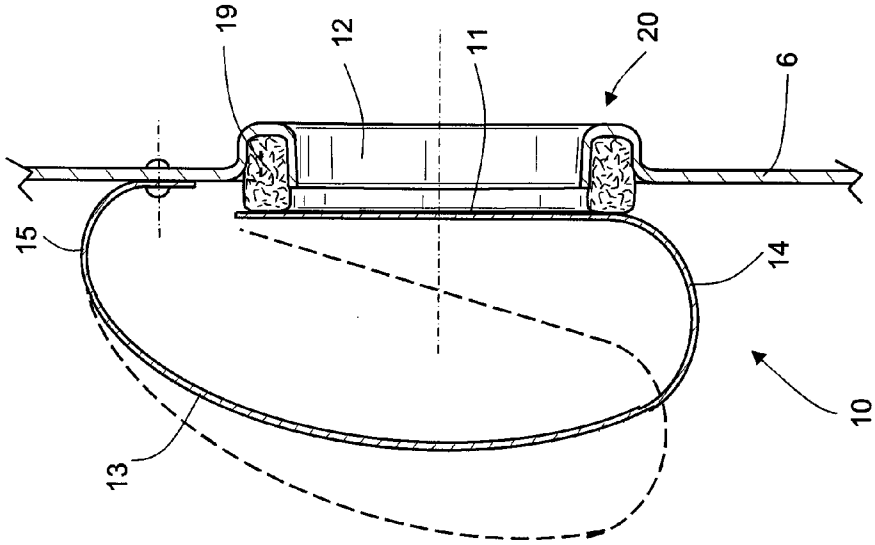

Fig.3

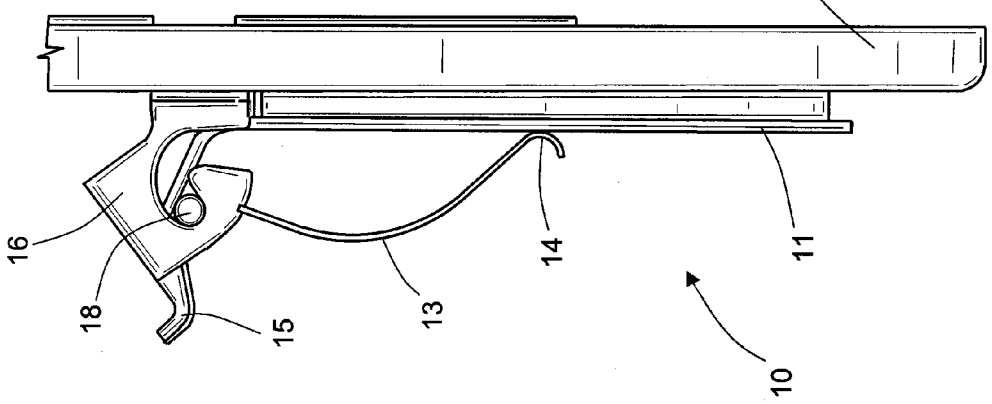

Fig.6

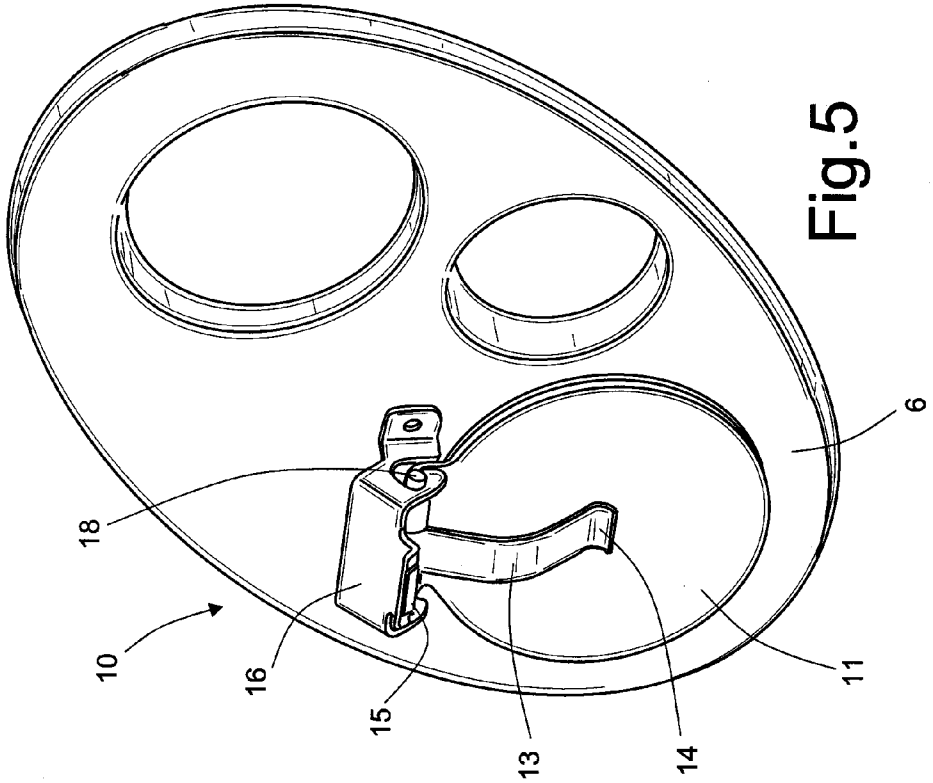

Fig.5

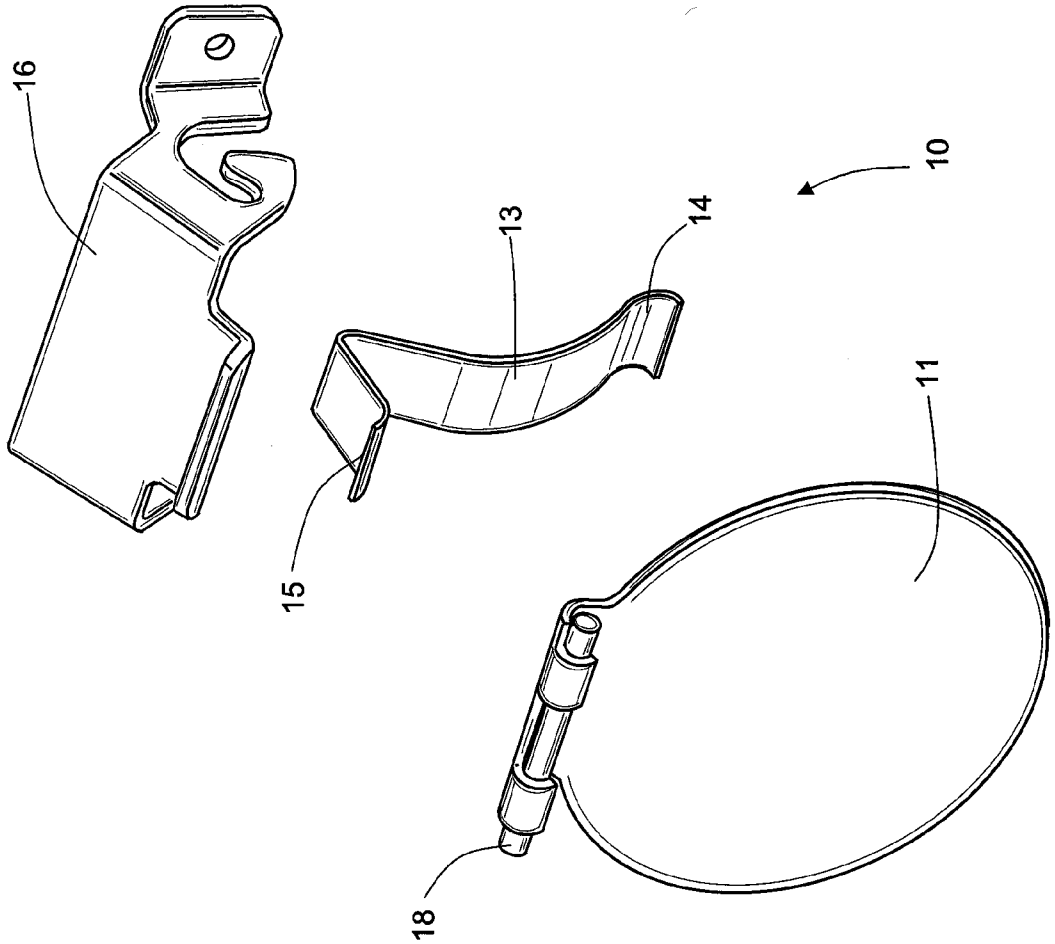

Fig.7

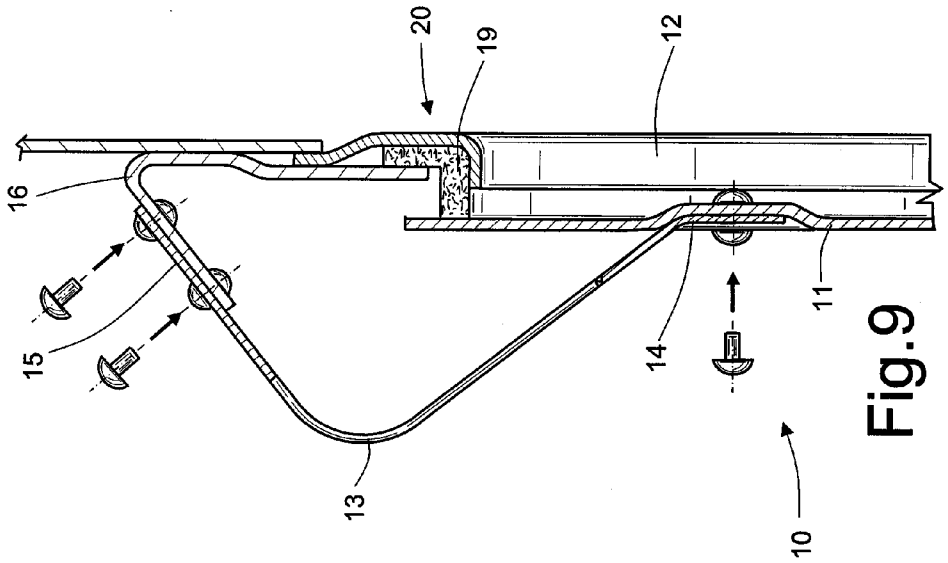

Fig.9

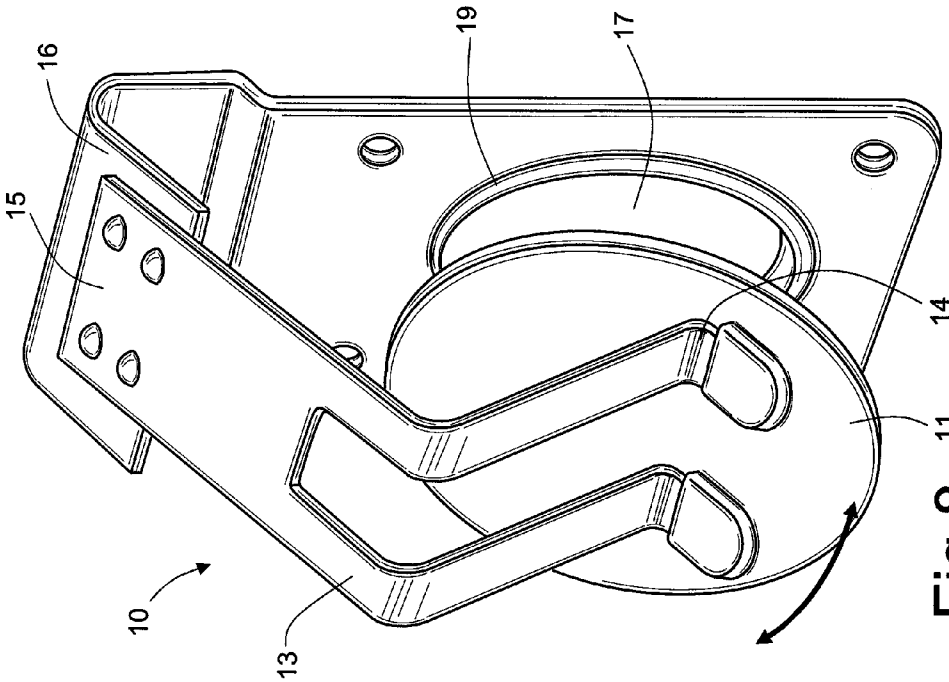

Fig.8

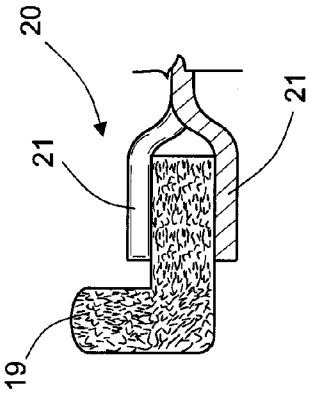

Fig11

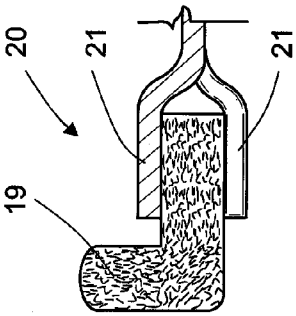

Fig12

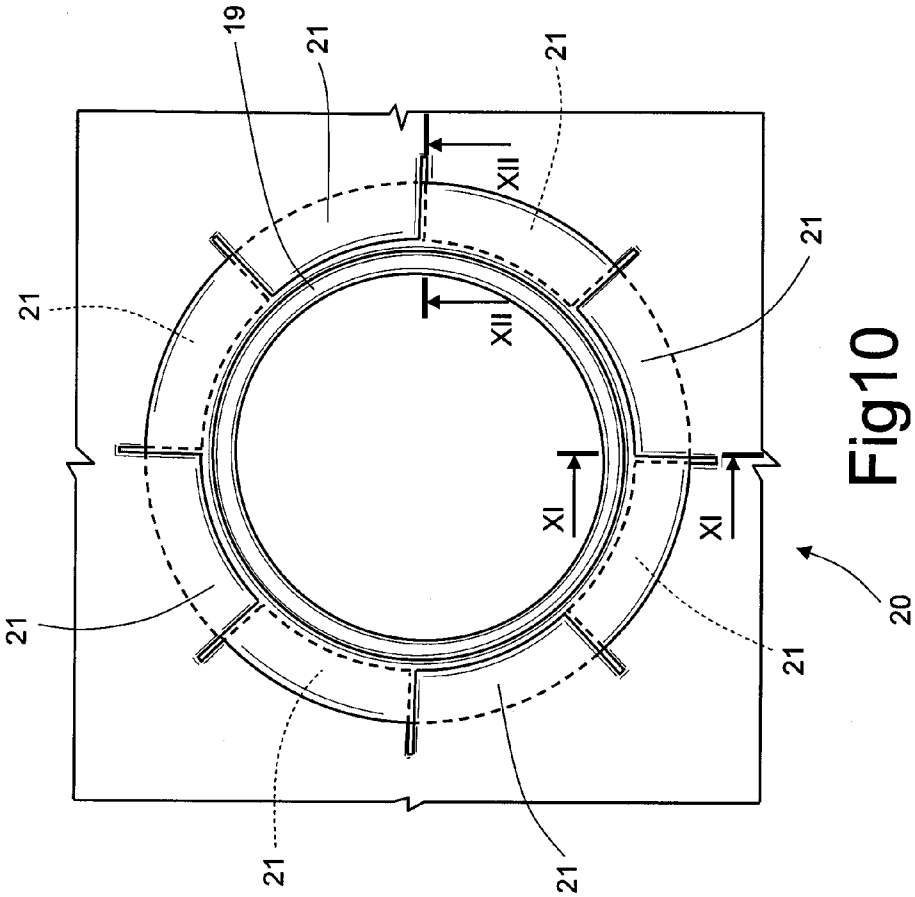

Fig10

VARIABLE GEOMETRY MUFFLER FOR AN EXHAUST SYSTEM OF AN INTERNAL COMBUSTION ENGINE

TECHNICAL FIELD

[0001] The present invention relates to a variable geometry muffler for an exhaust system of an internal combustion engine.

BACKGROUND ART

[0002] An internal combustion engine is provided with an exhaust system, which has the function of introducing into the atmosphere the gases produced by the combustion limiting both the noise and the content of polluting substances. A modern exhaust system comprises at least one muffler comprising a tubular body, which typically displays an elliptical section and is provided with an inlet opening and an outlet opening. A labyrinth which determines a path for the exhaust gases from the inlet opening to the outlet opening is defined within the tubular body; such labyrinth is normally formed by diaphragms (or baffles) arranged transversally (i.e. perpendicularly to the longitudinal axis of the tubular body) to define chambers within the tubular body and by tubes which connect the chambers to each other.

[0003] In a traditional muffler, the counterpressure generated by the muffler (i.e. the loss of pressure determined in the exhaust gases by the passage through the muffler) grows exponentially according as the engine speed increases (i.e. as the average speed of the exhaust gases increases). Consequently, in order to avoid excessively high counterpressure values at high engine speeds, it is necessary to penalise noise attenuation at low engine speeds. However, it would be preferable if the counterpressure generated by the muffler were more constant at varying engine speeds so as obtain both a good noise attenuation at low engine speeds and a limited counterpressure at high engine speeds.

[0004] In order to have a more constant counterpressure generated by the muffler at the variation of the engine speed, it has been suggested the use of at least one bypass valve, which is controlled by pressure (i.e. is passive being without a motor member) and has the function of modifying the geometry of the muffler labyrinth according to the exhaust gas pressure (i.e. according to the engine speed). An example of a bypass valve is provided in patent application WO2005059327A1.

[0005] A known bypass valve displays a lid, which is coupled to a bypass opening obtained through a diaphragm of the muffler and is mobile from a closed position of the bypass opening to an opening position of the bypass opening by effect of the exhaust gas pressure and against the bias of a spring which tends to maintain the lid in the closed position. The most common solution provides that the lid is hinged onto the diaphragm of the muffler and is coupled to a torsional spring.

[0006] It has been observed that the known bypass valves display a limited reliability in time, because the sliding couplings of the known bypass valves (i.e. the hinging points of the lid and the turns of the spring) tend to get jammed or however to work in a different manner from that provided in the design step by effect of the incrustations formed by the exhaust gases.

DISCLOSURE OF INVENTION

[0007] It is the object of the present invention to provide a variable geometry muffler for an exhaust system of an internal combustion engine, which muffler is free from the above-described drawbacks, and specifically is easy and cost-effective to manufacture.

[0008] According to the present invention, a variable geometry muffler for an exhaust system of an internal combustion engine is provided as claimed in the attached claims.

BRIEF DESCRIPTION OF THE DRAWINGS

[0009] The present invention will now be described with reference to the accompanying drawings, which illustrate some non-limitative examples of embodiment thereof, in which:

[0010] FIG. **1** is a schematic and perspective view of a muffler made according to the present invention;

[0011] FIG. **2** is a schematic view of an internal labyrinth of the muffler in FIG. **1**;

[0012] FIG. **3** is a side section view of a bypass valve of the muffler in FIG. **1**;

[0013] FIG. **4** is a schematic and perspective view of a different embodiment of the bypass valve in FIG. **3**;

[0014] FIG. **5** is a schematic and perspective view of a further embodiment of the bypass valve in FIG. **3**;

[0015] FIG. **6** is a side elevated view of the bypass valve in FIG. **5**;

[0016] FIG. **7** is a perspective exploded view of the bypass valve in FIG. **5**;

[0017] FIG. **8** is a schematic and perspective view of a further embodiment of the bypass valve in FIG. **3**;

[0018] FIG. **9** is a side section view of the bypass valve in FIG. **8**;

[0019] FIG. **10** is a plan view of an annular accommodation seat of a wire-mesh ring;

[0020] FIG. **11** is a section view taken along line XI-XI of a detail in FIG. **10**; and

[0021] FIG. **12** is a section view take along line XII-XII of a detail in FIG. **10**.

PREFERRED EMBODIMENTS OF THE INVENTION

[0022] In FIG. **1**, numeral **1** indicates as a whole a muffler **1** for an exhaust system of an internal combustion engine (not shown). Muffler **1** comprises a tubular body **2**, which displays an elliptical section and is provided with an inlet opening **3**, through which the exhaust gases produced by the internal combustion engine enter tubular body **2**, and an outlet opening **4**, through which the exhaust gases exit from tubular body **2**.

[0023] As shown in FIG. **2**, a labyrinth **5** which determines a path for the exhaust gases from inlet opening **3** to outlet opening **4** is defined inside tubular body **2**. Labyrinth **5** consists of diaphragms **6** (or baffles) arranged transversally (i.e. perpendicularly to a longitudinal axis **7** of tubular body **2**) to define chambers **8** within tubular body **2** and of tubes **9** which connect chambers **8** to each other.

[0024] A bypass valve **10**, which is adapted to modify the geometry of labyrinth **5** according to the pressure of the exhaust gases is arranged within tubular body **2**; specifically, in the embodiment shown in FIG. **2**, bypass valve **10** is coupled to a diaphragm **6** and according to the exhaust gas pressure is adapted to put two chambers **8** which are, normally, reciprocally isolated by diaphragm **6** itself into direct communication.

[0025] As shown in FIG. **3**, bypass valve **10** comprises a lid **11**, which is coupled to a bypass opening **12** and is mobile from a closed position (shown by a solid line in FIG. **3**) of bypass opening **12** to an opening position (shown by a dotted line in FIG. **3**) of bypass opening **12** by effect of the exhaust gas pressure and against the bias of an elastic body which tends to maintain lid **11** in the closed position.

[0026] The elastic body consists of an elastic foil **13**, which is folded as a "U" and displays a mobile end **14** coupled to lid **11** and a fixed end **15** which is opposite to mobile end **14** and integral with a fixed part of muffler **1** (specifically with diaphragm **6** in which bypass valve **10** is mounted).

[0027] According to the embodiment shown in FIGS. **2**, **3**, **4**, **8** and **9**, mobile end **14** of elastic foil **13** supports lid **11**. According to the embodiment shown in FIGS. **2** and **3**, lid **11** consists of an extension of mobile end **14** of elastic foil **13** and forms a monolithic body with elastic foil **13** itself; instead, according to the embodiments shown in FIGS. **4**, **8** and **9**, mobile end **14** of elastic foil **13** is connected to lid **11** by means of rivets, fitting and/or welding. According to a different embodiment (not shown), mobile end **14** of elastic foil **13** supports lid **11** by means of the interposition of a connecting element, which is fixed both to mobile end **14** and to lid **11**.

[0028] According to the embodiment shown in FIGS. **2** and **3**, fixed end **15** of elastic foil **13** is arranged by the side of bypass opening **12** and is directly fixed (typically screwed, riveted or welded) to diaphragm **6** in which bypass valve **10** is mounted.

[0029] According to the embodiments shown in FIGS. **4-9**, fixed end **15** of elastic foil **13** is arranged by the side of bypass opening **12** and is fixed to a support **16** (typically screwed, riveted or welded) to diaphragm **6** in which bypass valve **10** is mounted. According to the embodiment shown in FIGS. **8** and **9**, support **16** displays a flat plate, which is arranged over bypass opening **12** and displays a through hole **17** obtained at bypass opening **12** itself. According to the embodiments shown in FIGS. **4-7**, support **16** is shaped as an inverted "U".

[0030] According to the embodiment shown in FIGS. **5-7**, lid **11** is hinged to support **16**, which is fixed (typically screwed, riveted or welded) to diaphragm **6** in which bypass valve **10** is mounted; in this manner, lid **11** is rotationally mounted to turn about an axis of rotation between the closed position and the opening position. In this embodiment, mobile end **14** of elastic foil **13** rests on lid **11**, while fixed end **15** of elastic foil **13** is coupled to (i.e. received by) support **16**. Preferably, lid **11** is hinged to support **6** by means of a hinge pin **18**, which is integral with support **16** (i.e. lid **11** turns with respect to pin **18**); furthermore, elastic foil **13** partially envelops pin **18**.

[0031] According to a preferred embodiment, bypass valve **10** comprises a wire-mesh ring **19**, which is arranged about bypass opening **12** to define an abutting element against which lid **11** rests in the closed position. According to the embodiment shown in FIGS. **2** and **3**, bypass opening **12** is obtained through diaphragm **6**, which displays an annular accommodation seat **20** of wire-mesh ring **19**. According to the embodiment shown in FIGS. **8** and **9**, support **16** displays annular accommodation seat **20** of wire-mesh ring **19**.

[0032] In the embodiment shown in FIGS. **2** and **3**, wire-mesh ring **19** displays a rectangular section and accommodation seat **20** consists of a "U"-shaped fold of diaphragm **6** squashed to clamp a lower portion of wire-mesh ring **19**. In the embodiments shown in FIGS. **8-12**, wire-mesh ring **19** displays a "L"-shaped section and accommodation seat **20** is formed so as to clamp a lower horizontal portion of wire-mesh ring **19**.

[0033] FIGS. **10-12** show a possible embodiment of annular accommodation seat **20** of wire-mesh ring **19**; specifically, accommodation seat **20** shown in FIGS. **10-12** consists of a plurality of portions **21** of diaphragm **6**, each of which is arranged to delimit bypass opening **12** and is deformed to catch a horizontal portion of wire-mesh ring **19**. Portions **21** of diaphragm **6** are alternatively deformed in opposite directions to catch opposite sides of the horizontal portion of wire-mesh ring **19**.

[0034] The above-described Muffler **1** displays a number of advantages, because it is simple and cost-effective to make and at the same time displays a high reliability in time; such result is obtained in virtue of the fact that the use of elastic foil **13** allows to make bypass valve **10** essentially insensitive to the incrustations formed by the exhaust gases.

1-20. (canceled)

21. A variable geometry muffler (**1**) for an exhaust system of an internal combustion engine; the muffler (**1**) comprises:

a tubular body (**2**), which displays an inlet opening (**3**), an outlet opening (**4**) and a labyrinth (**5**) which determines a path for the exhaust gases from the inlet opening (**3**) to the outlet opening (**4**); and

one bypass valve (**10**), which is arranged within the tubular body (**2**) to modify the geometry of the labyrinth (**5**) according to the exhaust gas pressure;

wherein the bypass valve (**10**) comprises a lid (**11**), which is coupled to a bypass opening (**12**) obtained through a diaphragm (**6**) and is mobile from a closed position of the bypass opening (**12**) to an opening position of the bypass opening (**12**) by effect of the exhaust gas pressure and against the bias of an elastic body which tends to maintain the lid (**11**) in the closed position, and a wire-mesh ring (**19**), which displays an "L"-shaped section and which is arranged about the bypass opening (**12**) to define an abutting element against which the lid (**11**) rests in the closed position;

wherein the diaphragm (**6**) displays an annular accommodation seat (**20**) of the wire-mesh ring (**19**) formed by a plurality of portions (**21**) of the diaphragm (**6**), each of which is arranged to delimit the bypass aperture (**12**) and is deformed to catch a horizontal portion of the wire-mesh ring (**19**).

22. A muffler (**1**) according to claim **21**, wherein the portions (**21**) of the diaphragm (**6**) are alternatively deformed in opposite directions to catch opposite sides of the horizontal portion of the wire-mesh ring (**19**).

23. A muffler (**1**) according to claim **21**, wherein the elastic body consists of an elastic foil (**13**), which is folded as a "U" and displays a mobile end (**14**) coupled to the lid (**11**) and a fixed end (**15**) which is opposite to the mobile end (**14**) and integral with a fixed part of the muffler (**1**).

24. A muffler (**1**) according to claim **23**, wherein the mobile end (**14**) of the elastic foil (**13**) supports the lid (**11**).

25. A muffler (**1**) according to claim **24**, wherein the mobile end (**14**) of the elastic foil (**13**) supports the lid (**11**) by means of the interposition of a connecting element, which is fixed both to the mobile end (**14**) and to the lid (**11**).

26. A muffler (**1**) according to claim **23**, wherein the fixed end (**15**) of the elastic foil (**13**) is arranged by the side of the bypass opening (**12**).

27. A muffler (**1**) according to claim **26**, wherein the fixed end (**15**) of elastic foil (**13**) is fixed to a support (**16**), which is fixed to a fixed part of the muffler (**1**), is arranged over the bypass opening (**12**) and displays a through hole (**17**) obtained at bypass opening (**12**) itself.

28. A muffler (**1**) according to claim **23**, wherein the lid (**11**) consists of an extension of the mobile end (**14**) of the elastic foil (**13**) and forms a monolithic body with the elastic foil (**13**) itself.

29. A muffler (**1**) according to claim **21**, wherein the mobile end (**14**) of the elastic foil (**13**) is directly fixed to the lid (**11**) and the fixed end (**15**) of the elastic foil (**13**) is fixed to a support (**16**) fixed onto a fixed part of the muffler (**1**).

30. A muffler (**1**) according to claim **29**, wherein the support (**16**) is shaped as an inverted "U".

31. A muffler (**1**) according to claim **23**, wherein the lid (**11**) is hinged to a fixed part of the muffler (**1**) and the mobile end (**14**) of the elastic foil (**13**) rests on the lid (**11**).

32. A muffler (**1**) according to claim **31**, wherein a support (**16**), which is integral with a fixed part of the muffler (**1**), accommodates the fixed end (**15**) of the elastic foil (**13**), and supports a hinging pin (**18**) of the lid (**11**), is provided.

33. A muffler (**1**) according to claim **32**, wherein the pin (**18**) is integral with the support (**16**) and the lid (**11**) turns with respect to the pin (**18**).

34. A muffler (**1**) according to claim **32**, wherein the pin (**18**) is integral with the lid (**11**) and turns with respect to the support (**16**).

35. A muffler (**1**) according to claim **32**, wherein the elastic foil (**13**) partially envelops the pin (**18**).

* * * * *