Aug. 18, 1931. R. W. IRISH 1,819,896

AUTOMATIC GOLF TEE

Filed Aug. 27, 1929 2 Sheets-Sheet 1

Fig. 1

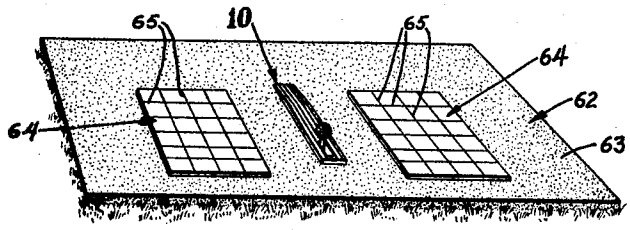

Fig. 2

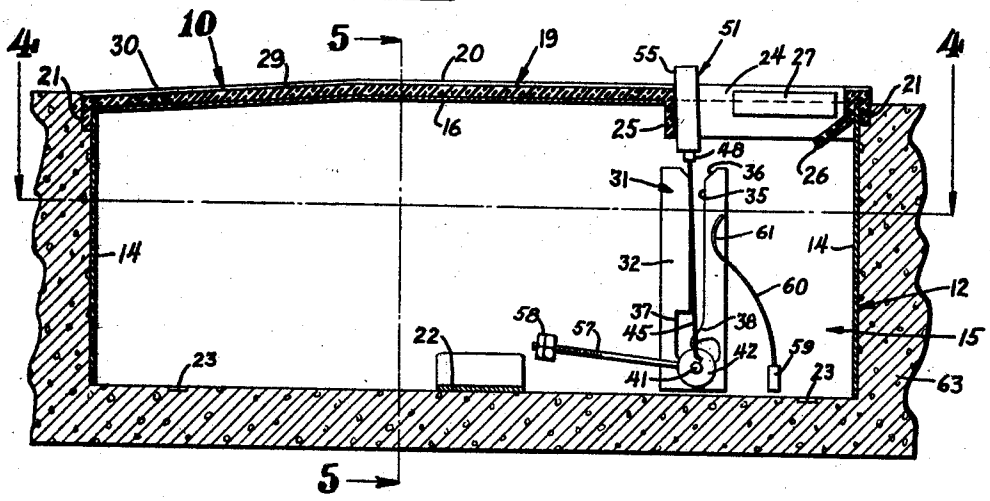

Fig. 3

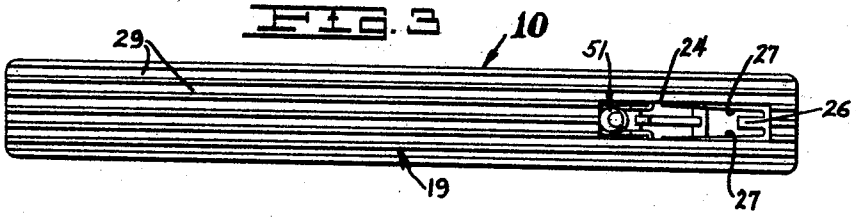

Fig. 4

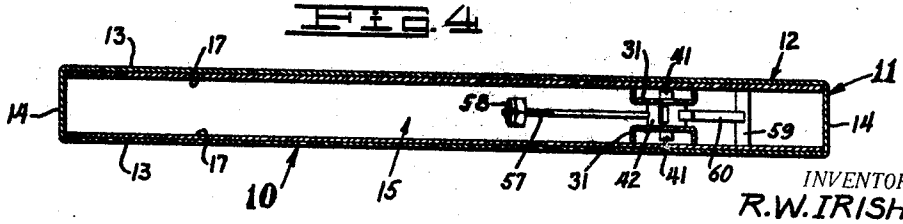

INVENTOR.
R. W. IRISH

BY

ATTORNEY.

Aug. 18, 1931. R. W. IRISH 1,819,896

AUTOMATIC GOLF TEE

Filed Aug. 27, 1929 2 Sheets-Sheet 2

Fig. 5

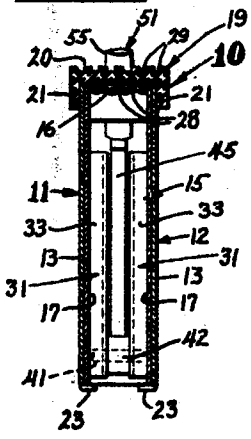

Fig. 7

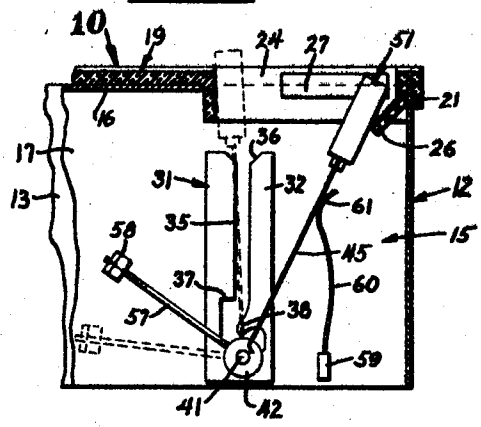

Fig. 6

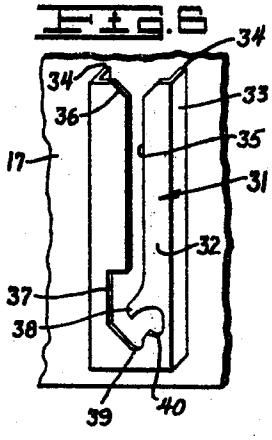

Fig. 9

Fig. 8

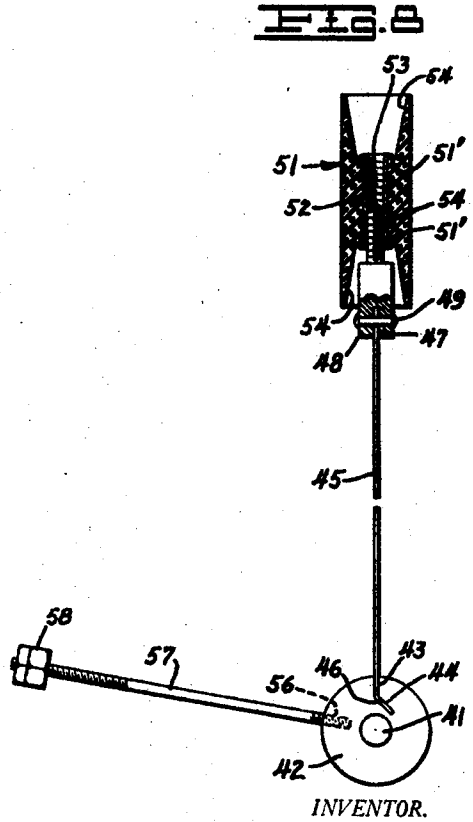

INVENTOR.
R. W. IRISH
BY
ATTORNEY.

Patented Aug. 18, 1931 1,819,896

UNITED STATES PATENT OFFICE

RUSH W. IRISH, OF CANON CITY, COLORADO, ASSIGNOR OF ONE-HALF TO JOHN P. THOMAS, JR., OF CANON CITY, COLORADO

AUTOMATIC GOLF TEE

Application filed August 27, 1929. Serial No. 388,757.

This invention relates to automatic golf tees.

The general object of the invention is to provide an automatic tee which is simple in construction and which is adjustable to suit varying conditions.

A more specific object of my invention is to provide an automatic golf tee including a receptacle having associated therewith a golf ball supporting stem which is adjustably mounted.

A further object of my invention is to provide an automatic tee including a support, a shaft, and a stem and wherein the stem includes novel means for receiving and supporting the golf ball.

An additional object of my invention is to provide an improved receptacle for an automatic golf tee.

An additional object of the invention is to provide a novel combined tee and indicating diagram whereby the golfer may quickly and correctly assume the correct position for striking a golf ball.

A still further object of my invention is to provide an automatic golf tee including a receptacle having a rubber cover whereby the impact of the club against the receptacle will not cause injury to either.

Other objects of my invention will be apparent from the following description taken in connection with the attached drawings wherein:

Fig. 1 is a perspective view of a golf tee embodying the features of my invention.

Fig. 2 is an enlarged central vertical longitudinal section through my improved automatic golf tee.

Fig. 3 is a top view of my invention.

Fig. 4 is a section taken on line 4—4 of Fig. 2 with the brace removed.

Fig. 5 is a section taken on line 5—5 of Fig. 2.

Fig. 6 is an enlarged face view of one of bearing supports.

Fig. 7 is a fragmentary view similar to Fig. 2 showing the golf ball support in an extreme advance position.

Fig. 8 is an enlarged side view partly in section of the golf ball supporting device, and

Fig. 9 is a view similar to Fig. 8 of a modified form of golf ball supporting device.

In the accompanying drawings I have indicated my improved tee generally at 10. This tee, as shown, comprises a receptacle indicated generally at 11. This receptacle comprises a sleeve 12 which is shown as including side walls 13 and end walls 14. The sleeve, as shown, has neither top nor bottom but is provided with an inner case 15 which is telescopically received within the sleeve 12. This case of of inverted U shape and includes a top 16 and side walls 17. The case preferably has a tight sliding fit within the sleeve.

The receptacle may be used as described or I may provide it with a cover indicated generally at 19. This cover includes a top 20 and a peripheral flange 21 which fits over the sleeve 12. I now prefer to make the sleeve and case out of suitable non-corrodable metal and to make the cover out of rubber, but the particular material employed may be varied without departing from the spirit of my invention.

In order to strengthen the case 15 I may arrange a transverse brace 22 across the bottom thereof and in order to limit the downward movement of the case in the sleeve I may provide the latter with lugs 23 as shown.

The top 16 and the top 20 are provided with aligning apertures 24 and the top 20 has a flange 25 which extends through the aperture into the receptacle 11. This flange has a downwardly extending resilient fin 26 thereon, the purpose of which will be presently described. The flange 25 also has converging vanes 27 thereon, these vanes being resilient. The cover 16 preferably has longitudinally extending corrugations 28 thereon, while the top 20 has similar corrugations 29. These corrugations serve to aid in directing the club head so that an accurate stroke may be made and the corrugations also stiffen the parts thereby preventing denting when struck by the club head and moreover the corrugations prevent the club head from losing its velocity when the player inadvertently causes the club head to strike behind the ball.

The rear portion of the top 16 and cover 20 may be inclined as indicated generally at 30 if desired in order to remove any likelihood of the club head striking the rear top edge of the tee.

Each opposed side wall 17 of the case is provided with a bearing support 31 which is preferably made of metal and includes a front portion 32 having flanges 33 which may be soldered to a sidewall as at 34. The front portion of each bearing support is provided with a slot 35 which is enlarged at the upper end as at 36 and is provided at its lower part with a lateral branch 37 below which is located a deflecting portion 38. Beneath the deflecting portion 38 I provide a notch which affords a bearing surface 39 and above this at a distance suitable to the requirements I arrange a second notch which provides a bearing surface 40. The notches and the bearing surfaces in the opposed bearing supports are in alignment.

My golf ball supporting device per se includes a shaft 41 which has a disc 42 thereon. The disc may be cast about the shaft or the disc and shaft may be made separable and assembled or the parts may be made otherwise as desired. The shaft 41 is adapted to be seated on the bearing surface 39 or the bearing surface 40 depending on whether a high or low tee is desired as will be understood from the following description.

The disc is provided with a slot 43 having a lateral branch 44. A resilient stem 45 made from a strip of spring steel having a lower curved end 46 is arranged in the slot 43 and the relation of parts is such that the lower end of the spring will have a tight driving fit with the slot so that when inserted and driven home it will remain in the fixed position.

The spring 45 will be made of material having the proper characteristics for the purpose intended and the upper end of the spring is shown as fitted in a slot 47 in a holding member 48. This spring may be held in place by a rivet 49. A rubber supporting head for a golf ball is indicated generally at 51 and includes spaced upper and lower shoulders 51′ and has a central aperture 52 in which a threaded ferrule 53 is secured. The upper end portion of the holding member is threaded as at 54. The head has a tapering side wall 55 thereon at each end.

The supporting head for the golf ball is reversible and is made of vulcanized rubber so that it remains elastic whereby the head may be quickly removed and reversed or another head may be substituted.

By referring to the drawings it may be noted that the bearing surfaces 39 and 40 are remote from the top 20 and the spring 45 is of such a length that the upper portion 55 of the head 51 will project through the aperture 24 while the top shoulder 51′ will be disposed beneath the top 20 so that there will be no possibility of the club head striking the shoulder 50.

In order to return the head 51 to normal substantially vertical position I provide a recess 56 in the disc 42 and in this recess I secure a rod 57 as by threads. This rod 57 may be provided with a suitable weight 58 which may be secured on the end thereof.

In order to supplement the action of the weight 58 I may provide a block 59 secured to the side walls 17 and having a leaf spring 60 secured thereto. The leaf spring has a curved portion 61 which normally is disposed adjacent to the stem 45 and in the path of movement of the later so that as the stem 45 moves when a ball resting on the head 51 is struck the spring 61 will retard the movement of the stem and will assist in returning the stem to normal position.

In use my automatic tee is preferably built into a tee indicated generally at 62. This tee includes a concrete or other base 63 on which pieces of linoleum or other suitable material 64 may be secured. The sleeve will be imbedded in the concrete when the latter is poured and after this is done the case may be inserted. If a cover is employed with the tee suitable provision for the cover flanges will be made in the base 63.

The linoleum pieces 64 may be provided with suitable geometric designs 65 shown as squares which are so spaced relatively to the head 51 that the player's feet will intersect certain of the lines defining the squares. All of the tees of a course will have the markings 65 similarly arranged so that the player can quickly and accurately take his correct stance thereby assuring an accurate driving position, while at the same time hastening play. By having one of my improved tees at his home the player can study out his correct stance and by noting the position of his feet he will be able to assume the same stance when he is actually playing on the course.

After the receptacle has been installed the stem 45 and associated parts is taken up and by holding the end portion of the head 51 the shaft 41 is inserted through the wide portion 36 into the slot 35, whence it drops so that the shaft 41 rests on the bearing surfaces 39 as shown in the drawings. If a low tee is desired the stem is allowed to remain in the position it assumed.

If a high tee is desired the operator will grasp the end of the head 51 and will pull it upwardly causing the shaft 41 to strike the deflecting portion 38 thereby causing the shaft to move laterally due to its engagement with the deflecting portion. After this is done the head is released and the shaft will drop onto the bearing surfaces 40.

When the tee is in the position desired the player places his ball upon the head 51 and after assuming his position strikes the ball thereby causes it to fly away and causing the

tee to swing about the shaft 41. In its movement the tee head will strike the vanes 27 and will later strike the fin 26, thereby causing a decrease in the speed of the tee head. The tee head will then be urged to normal position by means of the weight 58 and the spring 61.

In Fig. 9, I show a slight modification of my invention, wherein the shaft 41 has a disc 42, rod 57 and weight 58 similar to that previously described. The disc 42 has a lug 66 thereon on which is secured a coiled spring 67 which is sufficiently stiff to normally assume a straight position. The other end of the spring engages an extension 68 on a supporting member 69 which includes an upper shoulder 70 and a lower shoulder 71. A reversible elastic head 72 engages the supporting member 69. The modification just described may be used in connection with the receptacle previously described.

From the foregoing description it will be apparent that I have provided a novel golf tee which is simple in construction and efficient in use.

Having thus described my invention, I claim:

1. In an automatic golf tee, and in combination with a teeing surface, a stem, said stem having a ball supporting portion thereon, means to support said stem for pivotal movement and means whereby the axis of pivotal movement of the stem may be shifted vertically to vary the position of the ball supporting portion.

2. In an automatic tee, a receptacle adapted to be imbedded within a teeing surface and including an apertured top, a stem, said stem having a golf ball receiving member at one end, a shaft on said stem and in vertical alignment therewith, a plurality of vertically spaced supports for said shaft within said receptacle and means whereby the shaft may be adjusted vertically on its supports to vary the height of said tee.

3. In an automatic golf tee, a hollow receptacle including side walls and a top and having an opening in the top thereof, said receptacle being adapted to be sunk in a teeing surface, converging vanes arrayed at the sides of said aperture and a downwardly directed fin at one end thereof, an axle support arranged on each side wall thereof and adjacent to the bottom thereof, said supports each including a portion secured to the side wall and a portion spaced from and parallel to the side wall, said last mentioned portion including a slot, said slot including an entrance portion, a deflecting portion, and a pair of axle supporting portions arranged at different heights, a stem, an axle on said stem, said axle being disposed on one of said axle supporting portions, a golf ball supporting member arranged upon the end of said stem, and means to maintain said stem in operative position.

4. In an automatic golf tee, a hollow sleeve having an open top, a case comprising a top and a pair of sides adapted to telescope within said sleeve, a cover, said cover including side flanges fitting over said sleeve, there being aligning apertures in one end of said case and cover, said cover also having side and end flanges fitting within said case aperture, said last mentioned side flanges including converging vanes and said last mentioned end flange having a downwardly directed fin thereon, an axle support arranged in said case on each side thereof and adjacent to the bottom thereof, said supports each including a portion secured to the side wall of the case and a portion spaced from and parallel to the side wall, said last mentioned portion including a slot, said slot including an entrance portion, a deflecting portion and a pair of axle supporting portions arranged at different heights, a stem, an axle on said stem, a golf ball supporting head arranged upon the end of said stem and means to cause said stem to normally assume a substantially vertical position.

5. In an automatic golf tee, a hollow sleeve having an open top and an open bottom and adapted to be sunk in a teeing surface, a case comprising a top and a pair of sides adapted to telescope within said sleeve, means to support said case with the top thereof parallel with the top of the sleeve, a rubber cover, said cover including a top and side flanges fitting over said sleeve, there being aligning apertures in one end of said case and cover, said cover also having flanges fitting within said case aperture, said last mentioned flanges including converging vanes and said last mentioned end flange having a downwardly directed fin thereon, an axle support arranged in said case on each side thereof and adjacent to the bottom thereof, said supports each including a portion secured to the side wall of the case and a portion spaced from and parallel to the side of the case, said last mentioned portion including a slot, said slot comprising an entrance portion, a deflecting portion and a pair of axle supporting portions arranged at different heights, a stem, an axle on said stem, said axle being disposed on the bottom of one of said pair of axle supporting portions, a rod on said axle, said rod having a weight thereon and being arranged at an angle to said stem and a golf ball supporting member arranged upon the end of said stem, said member projecting above said cover.

6. In an automatic golf tee, a hollow receptacle, a ball supporting stem pivotally mounted in said receptacle on an axis disposed adjacent to the bottom of said receptacle, means on said stem to engage a ball, the axis of said stem intersecting the axis of said pivot and means in said receptacle for normally main-

tainnig said stem in any one of a plurality of predetermined positions, said means being vertically spaced.

7. In an automatic golf tee, and in combination with a teeing surface, a stem, a plurality of vertically spaced bearings, means for pivotally mounting said stem in operative position on any one of said bearings.

In testimony whereof, I hereunto affix my signature.

RUSH W. IRISH.