US 20020059763A1

(19) **United States**

(12) **Patent Application Publication** (10) **Pub. No.: US 2002/0059763 A1**

Wong (43) **Pub. Date: May 23, 2002**

(54) **PRE-FABRICATED BATHROOM**

(76) Inventor: **Tin Cheung Wong**, Kowloon (HK)

Correspondence Address:
CLARK & BRODY
Suite 600
1750 K Street, NW
Washington, DC 20006 (US)

(21) Appl. No.: **09/851,373**

(22) Filed: **May 9, 2001**

(30) **Foreign Application Priority Data**

May 19, 2000 (GB) 0012036.0

Publication Classification

(51) **Int. Cl.**[7] **E04B 1/16**

(52) **U.S. Cl.** **52/378**

(57) **ABSTRACT**

A method of construction and installation of a self contained bathroom unit which is capable of installation in multi-storey buildings. The bathroom unit may be fabricated at a site remote to the site of installation and can be transported to the site as and when required. The bathroom walls are cast with conduits and spaces for light boxes and openings for windows and drainage. Hooks are also cast into the walls to enable the bathroom unit to be lifted to the desired location. The bathroom units are seated on a foundation which is laid for this purpose. The top slab of the bathroom unit can then be used as the formwork and a topping slab is cast in situ to form the floor of the next floor.

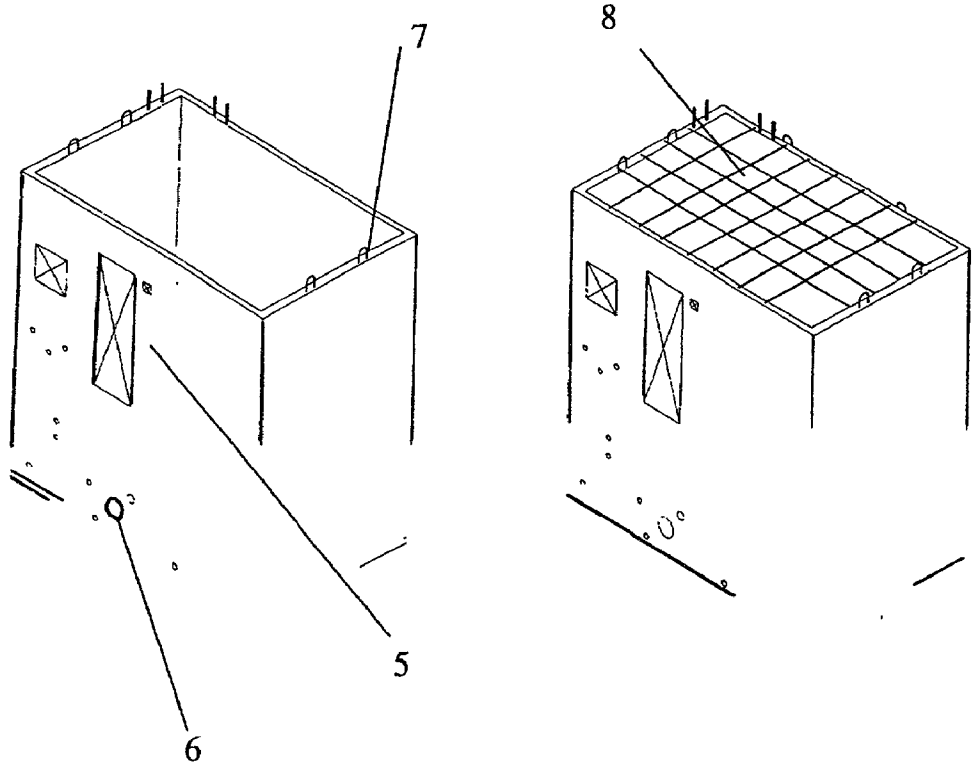

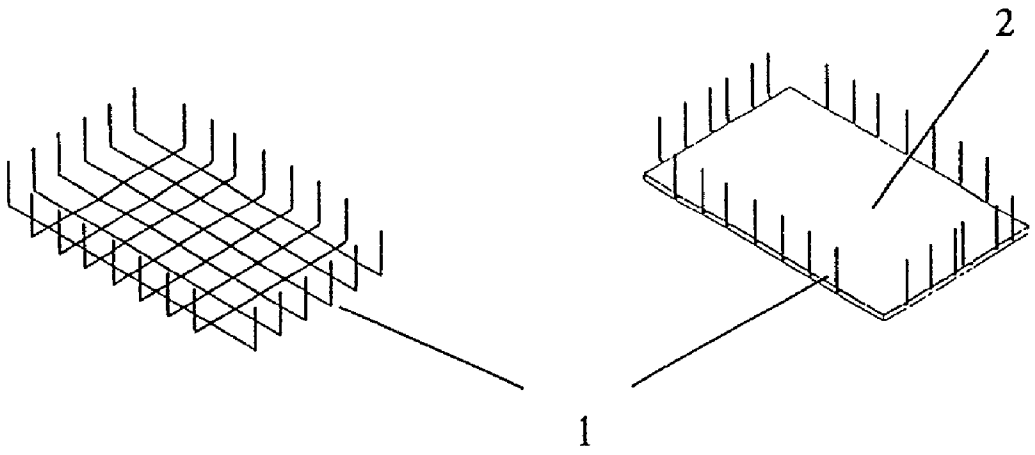

Figure 1

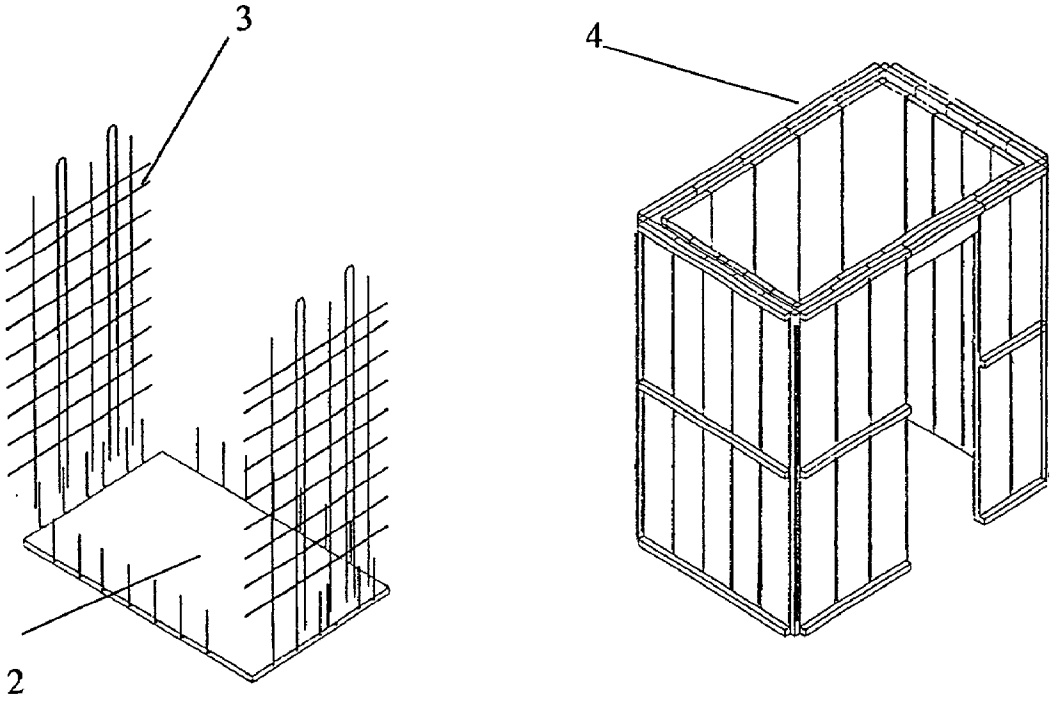

Figure 2

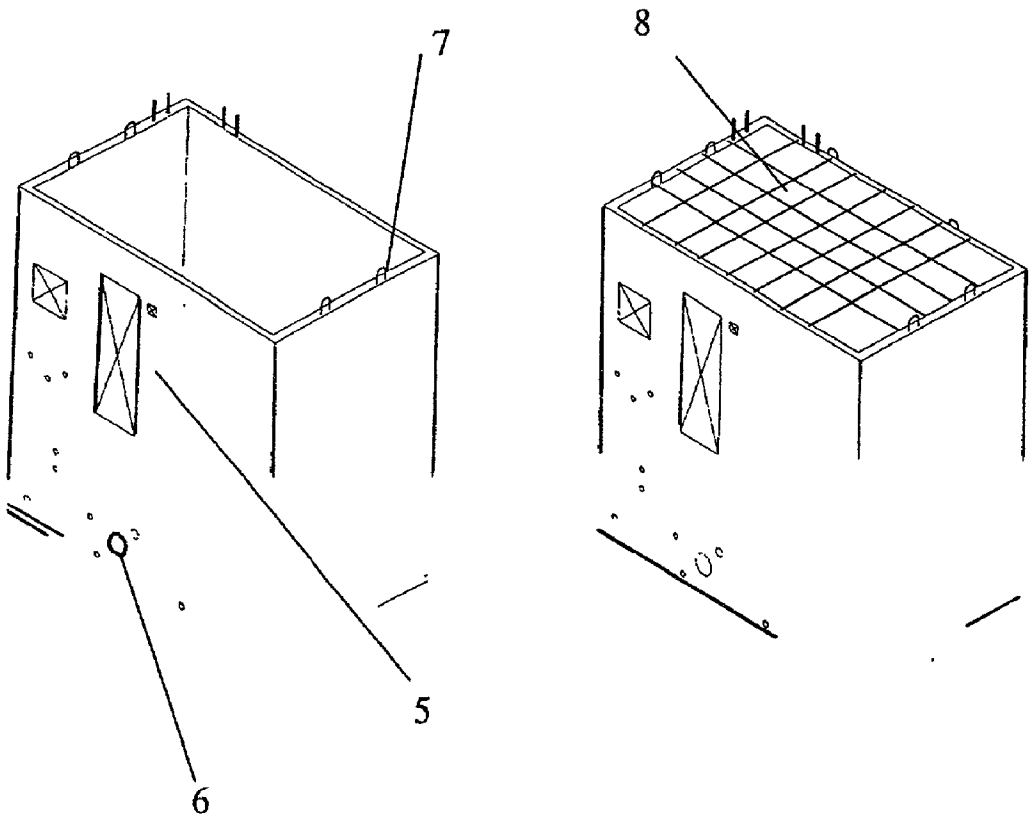

Figure 3

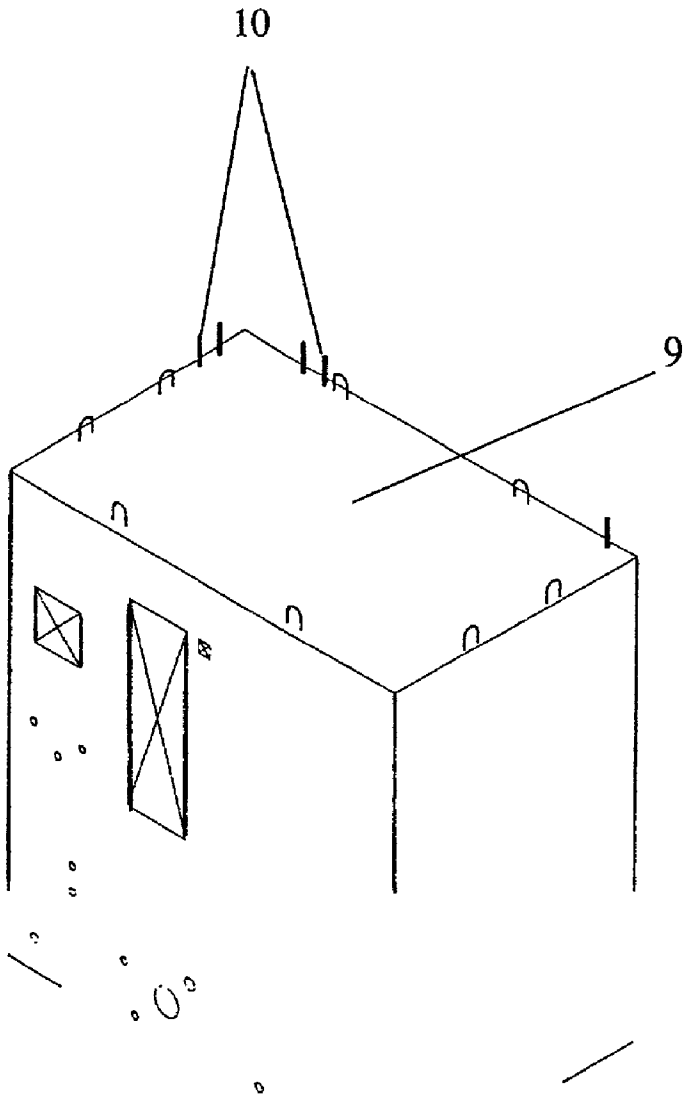

Figure 4

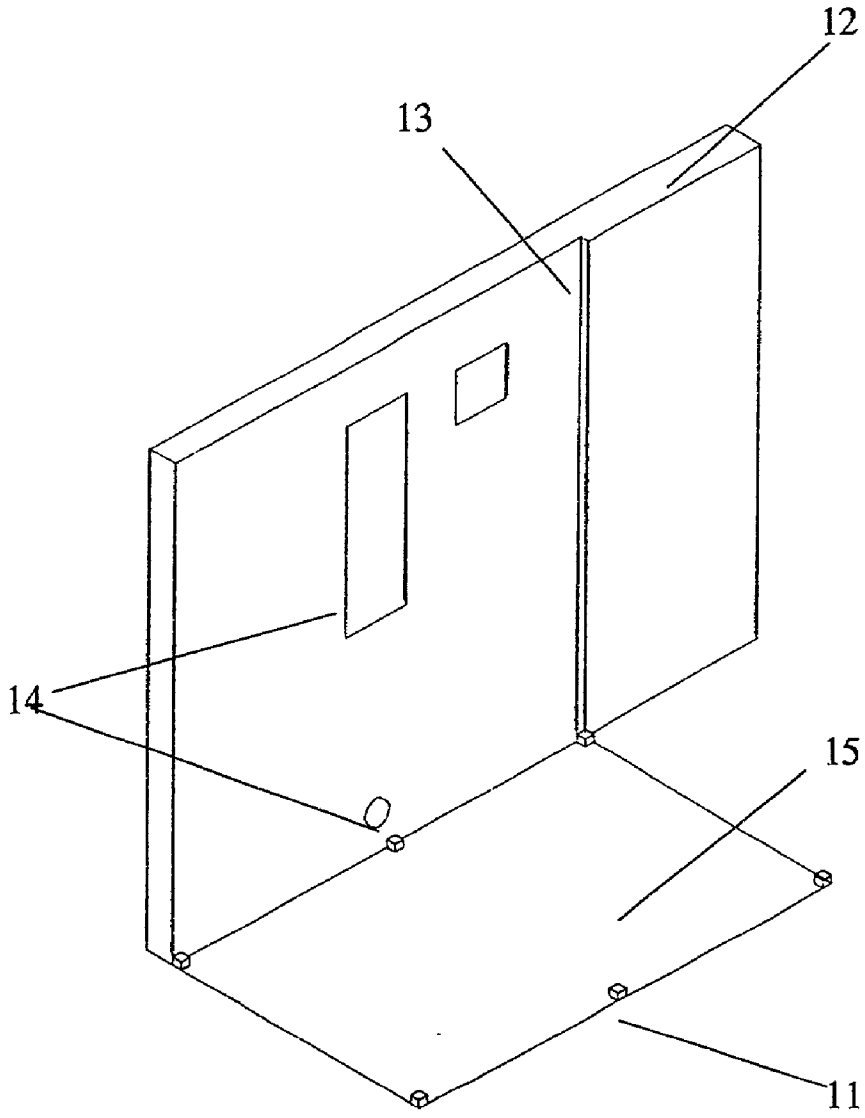

Figure 5

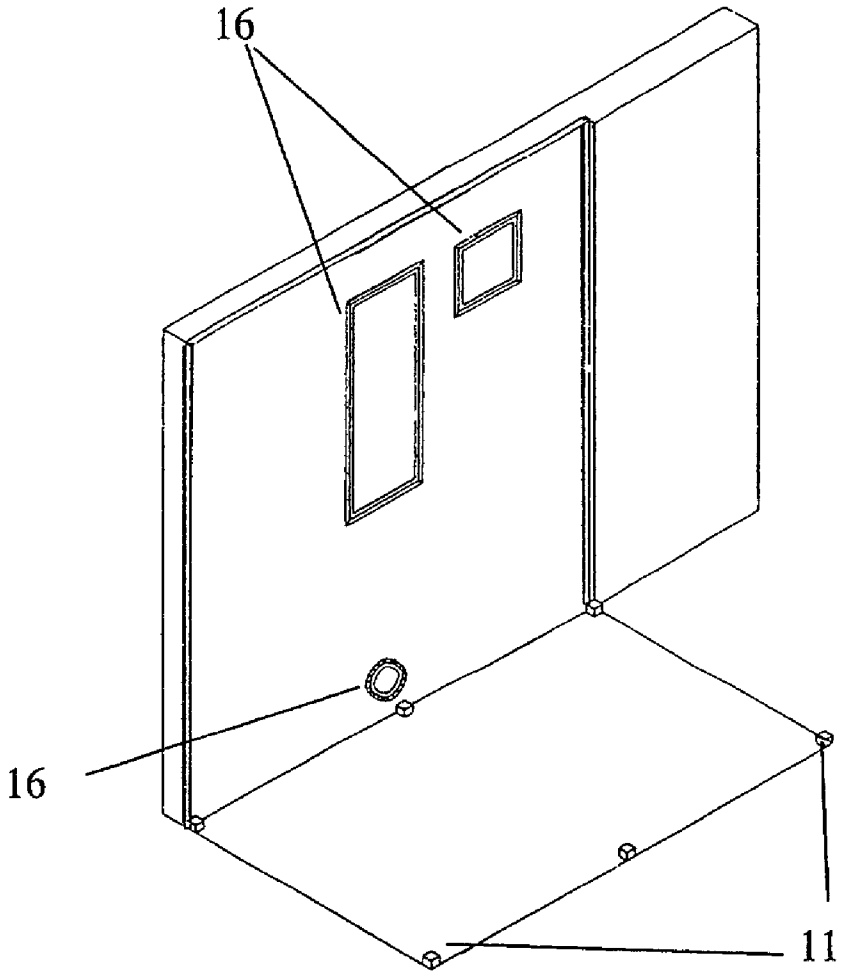

Figure 6

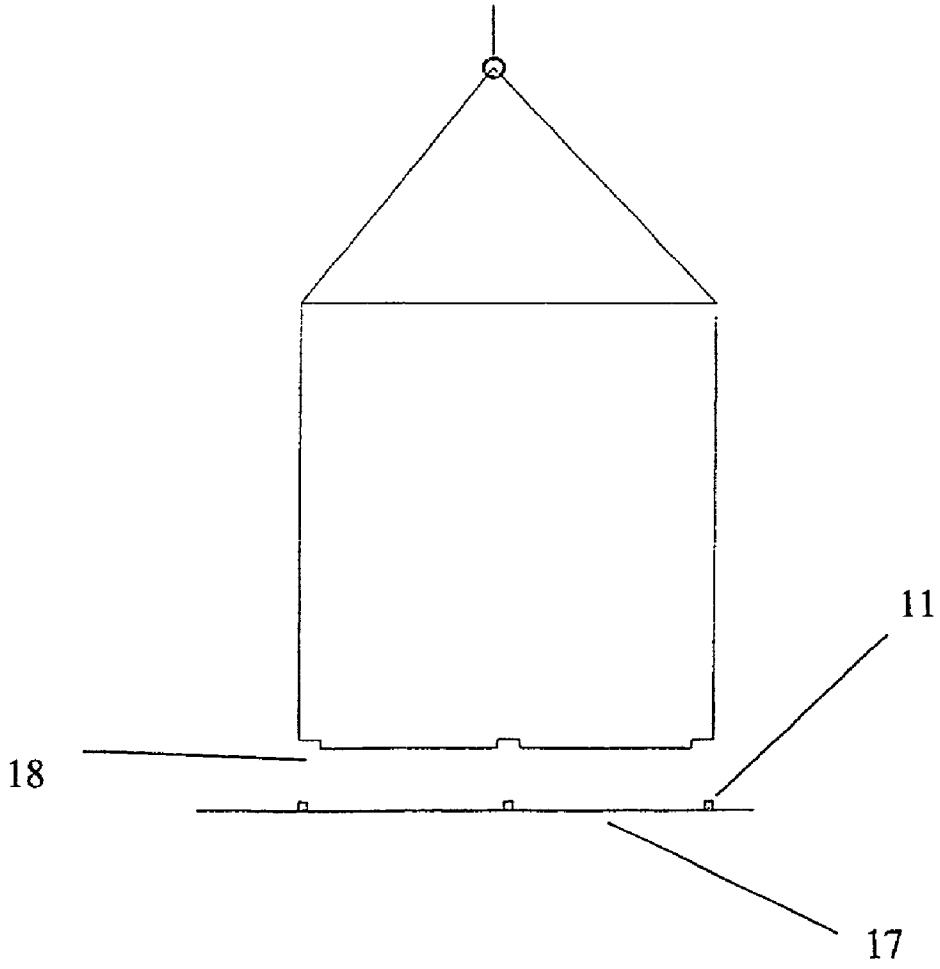

Figure 7

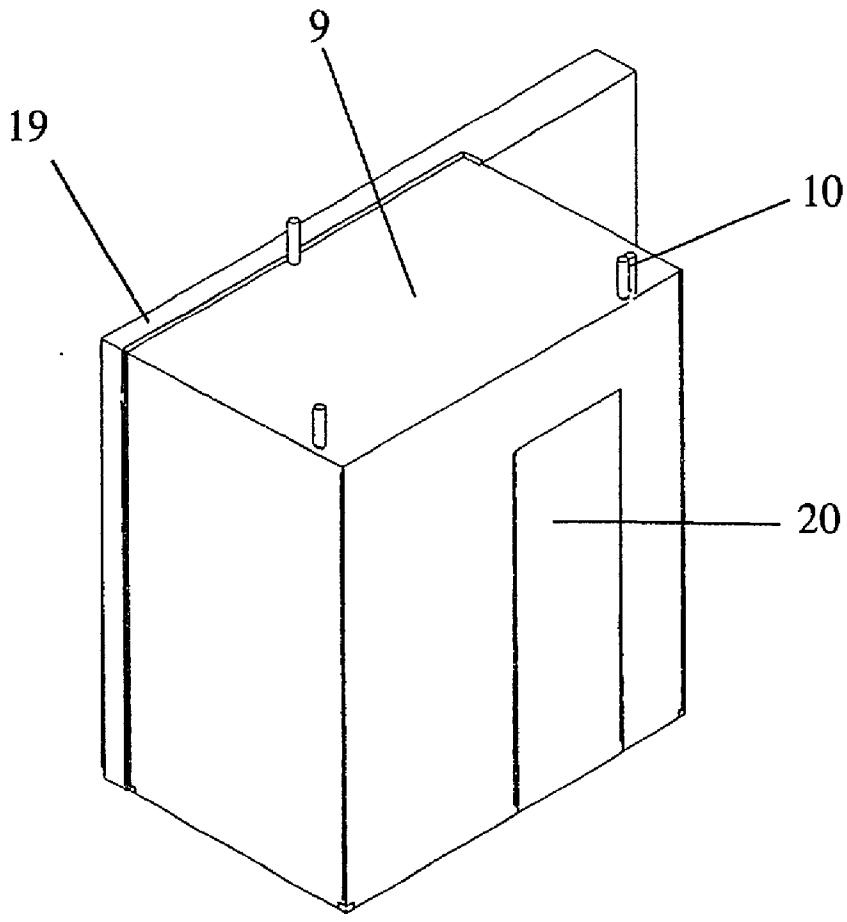

Figure 8

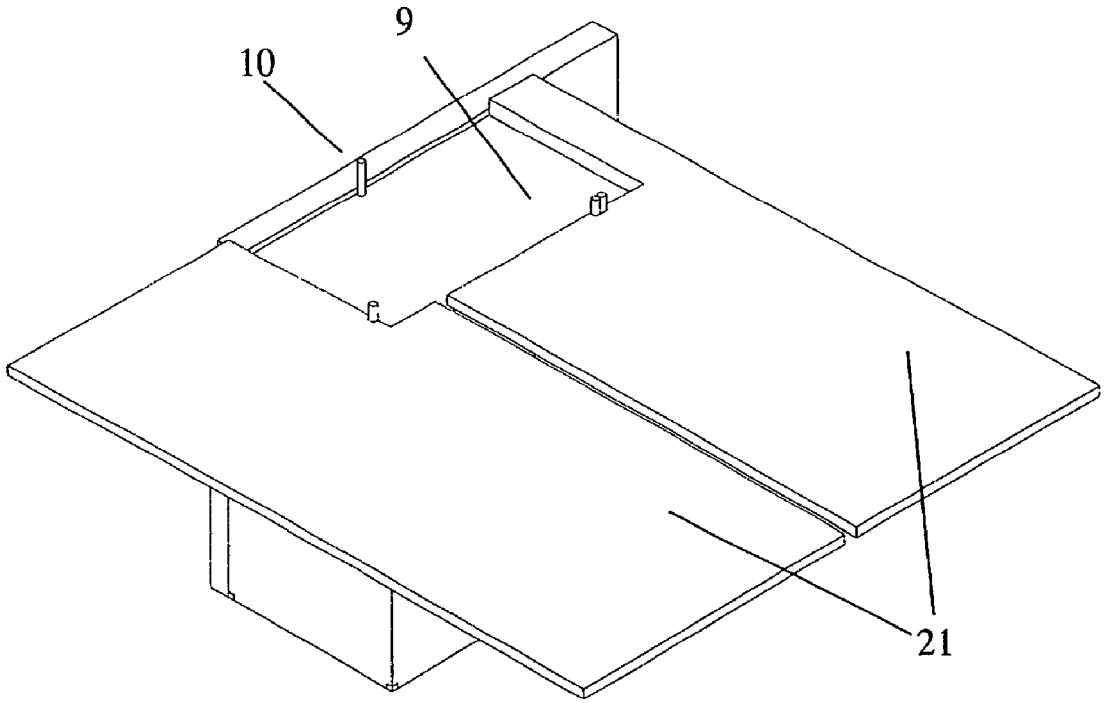

Figure 9

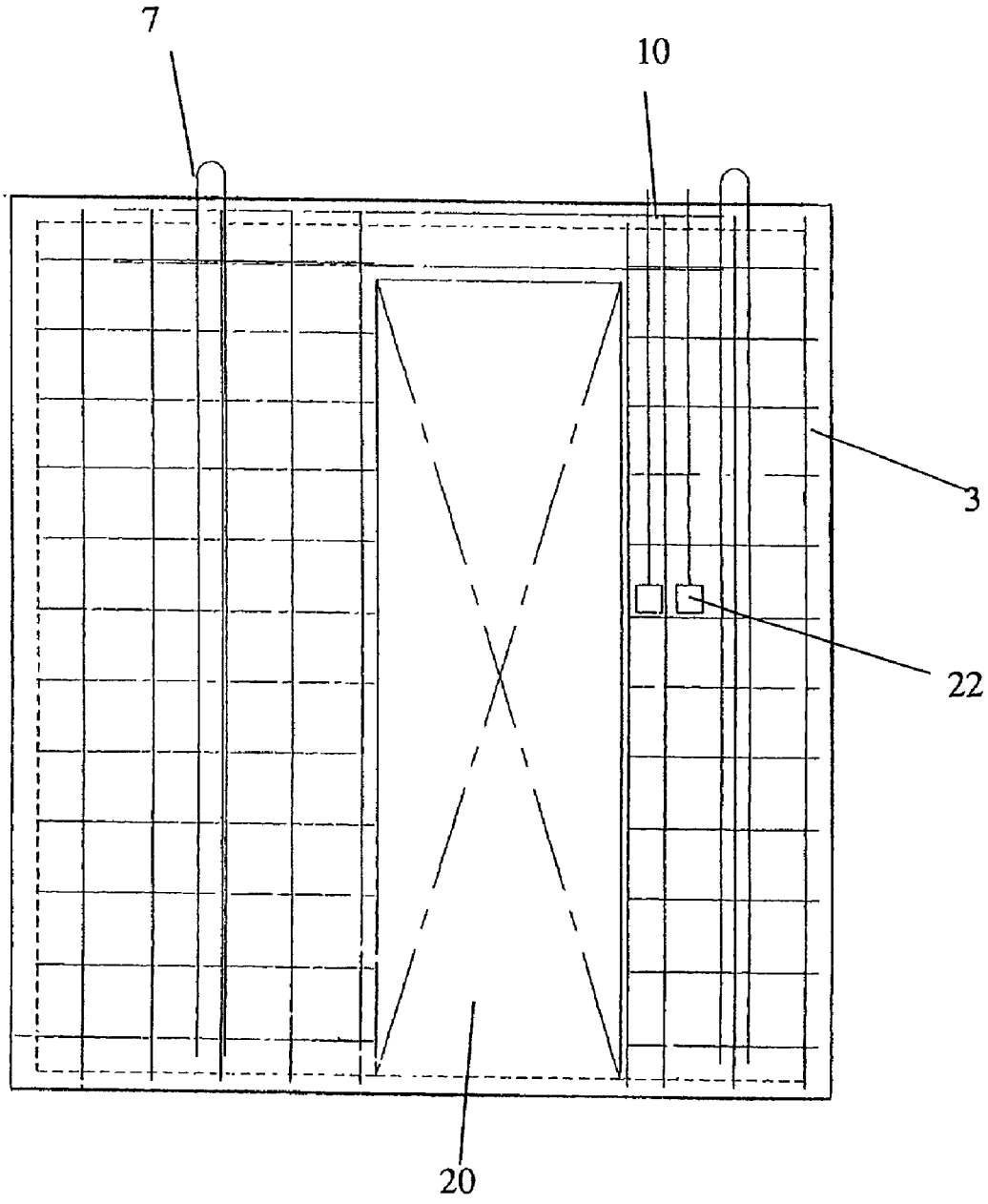

Figure 10

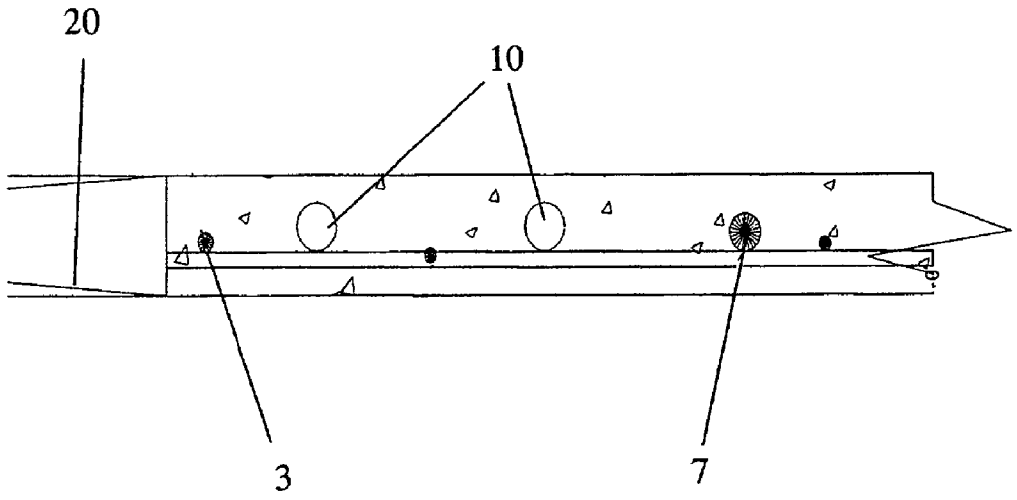

Figure 11

PRE-FABRICATED BATHROOM

[0001] This invention relates to a method for constructing and installing a prefabricated bathroom in multi-storey buildings.

[0002] In the construction of multi-storey buildings the installation of a bathroom usually takes a considerable time as the bathroom has to be created on-site. Work on the bathroom requires the erection of the panels/walls forming the bathroom i.e. the framework for the bathroom, to be erected onsite while the construction is in progress. This process is labor and time intensive which results in increase in cost.

[0003] The construction of pre-fabricated bathroom's is known in the art, see Korean patent No. 10-244019. The prior art discloses the construction of the framework of the bathroom panel by panel, in a modular fashion. This process is in itself time and labor-intensive and may not yield cost savings when utilized in multi-storey buildings.

[0004] One of the disadvantages of the present method of construction of bathroom units is that as each bathroom is individually fabricated on site it is difficult to maintain quality consistency.

[0005] Yet further disadvantages with the present method are that as there is substantial work to be done on site to create the bathroom it takes longer before waterproofing and tiling work can commence, drainage cannot be tested until the bathroom has been assembled. Further the walls of the bathroom unit need to be cut on site to provide recesses for building services conduits.

[0006] The present invention relates to a method for constructing and installing a pre-fabricated bathroom in multi-storey buildings which overcomes the disadvantages of the traditional methods of construction and the prior art.

[0007] The invention requires the construction of a fully self-contained bathroom unit, which is constructed with lightweight concrete and reinforcement. Concealed conduits are cast in the wall together with mesh reinforcement. Openings for windows, flues, drainage and doors are then formed. The precast bathroom is completed with water-proofing and internal fitting works. The entire unit can then be transferred to the site for installation as and when required.

[0008] An advantage of the invention is that considerable time is saved in the installation of the bathroom and the number of workmen required for the construction and installation of the bathroom are reduced.

[0009] Yet a further advantage of the present invention is that as the bathrooms are precast in a factory it is possible to exercise greater degree of quality control which results in a higher standard of finished product. The prefabricated bathroom units can be tested prior to delivery to the site which minimizes remedial action to cure defects.

[0010] As the building services conduits are cast in the factory no further cutting of the panel walls is necessary to make recesses for building services conduits.

[0011] This results in faster construction time and overall savings. As the prefabricated bathroom is constructed as an entire self-contained unit it results in better waterproofing compared with the traditional method of construction.

[0012] The method of installation of the pre-fabricated bathroom unit on-site requires the entire pre-fabricated structure to be seated on a foundation which is laid for this purpose. Once the pre-fabricated bathroom unit is seated in place precast slabs can then be laid on top of the unit to form the next storey and construction can then proceed. The bathroom can then be finished while construction proceeds.

[0013] The method of construction and installation will now be described in detail.

[0014] Method of Construction

[0015] The construction of the pre-fabricated bathroom unit is achieved by the following series of steps:

[0016] 1. Slab reinforcement is fixed to allow the creation of the floor. Concrete of the desired strength is poured over the reinforcement to create the floor slab.

[0017] 2. Wall reinforcements are then fixed to the slab to create the four walls of the bathroom unit itself. Building services conduits are provided in the wall and slabs to enable piping and wiring to be installed. Light boxes are also provided and fixed to the wall reinforcement. Steel hooks are also fixed in the reinforcement to enable the entire unit to be lifted and moved to the desired location.

[0018] 3. Steel moulds other then fixed around the wall reinforcement. Concrete of suitable strength is then poured into the mould to create the walls of the bathroom.

[0019] 4. Once the floor and walls of the pre-fabricated bathroom have been cast, steel moulds are then stripped and formwork is fixed to the open roof space of the unit to allow the roof slab to be cast.

[0020] 5. The roof slab and walls of the prefabricated bathroom can also be cast in one pour when light weight formwork types such as timber, steel or aluminium are used.

[0021] 6. Waterproofing, tiling and finish works inside the prefabricated bathroom unit are carried out.

[0022] This entire process is carried out off-site and the completed pre-fabricated bathroom unit is then ready to be transported to site as and when it is needed.

[0023] The bottom surface of the base slab is disposed with recesses so that it can sit on the floor which has been prepared for its installation.

[0024] Installation

[0025] At the site the area where the pre-fabricated bathroom will sit which is adjacent to the external structural wall, is marked out and cleared. The external structural wall is recessed to accommodate the bathroom unit and to ensure the walls bathroom unit and the structural wall have a tight fit.

[0026] Leveled bedding or bearing pads are disposed at various points on the floor slab for the bathroom unit to sit on. A layer of cement sand slurry is then applied to the floor area where the bathroom unit will sit.

[0027] A thin strip of suitable compressible material is then attached to the structural wall and the openings in structural wall for the window and drainage outlet. The

pre-fabricated bathroom unit can then be lowered to sit on the leveled bearing pads. The installation of the pre-fabricated bathroom unit itself can be completed by the joint between the external wall and the bathroom unit being filled with non-shrink grout to the edge of the joint to form a water tight seal.

[0028] Precast slabs can then placed on top of the bathroom unit to form the next floor. A topping slab is then cast in situ to complete the floor of the next storey up. The installation cycle can then continue with the erection of the external precast facade of the next floor.

[0029] The method of construction and installation will now be described by reference to the drawings.

[0030] FIGS. **1** to **4** illustrate the production sequence of the prefabricated bathroom.

[0031] **FIG. 1** shows the slab reinforcement and the concreted slab.

[0032] **FIG. 2** shows wall reinforcement fixed to the sides of the concrete slab and the entire wall reinforcement being encased in steel moulding ready for concreting.

[0033] **FIG. 3** shows the bathroom unit with **4** walls and the slab to which formwork is attached to cast the roof.

[0034] **FIG. 4** shows the finished layout of the prefabricated bathroom.

[0035] FIGS. **5-9** illustrates the installation sequence of the prefabricated bathroom on-site.

[0036] **FIG. 5** shows the external structural wall where the prefabricated bathroom will be located which is recessed to accommodate the bathroom unit.

[0037] **FIG. 6** shows the preparation of the structural wall to receive the bathroom unit.

[0038] **FIG. 7** shows the bathroom unit being seated on the bearing pad.

[0039] **FIG. 8** shows the bathroom unit installed at the structural wall.

[0040] **FIG. 9** shows the placement of the precast floor slabs on the bathroom unit to commence construction of the floor above.

[0041] **FIG. 10** shows an elevation of one wall of the prefabricated bathroom.

[0042] **FIG. 11** shows a cross section of the bathroom wall.

[0043] In order to create the precast bathroom steel reinforcement is shaped into a mesh **(1)** to form the basis of the slab. Concrete is then poured over the mesh to create the slab **(2)**. Wall reinforcements **(3)** are then fixed to the slab **(2)** to create the four walls of the bathroom unit. Internal conduits **(10)** to facilitate cabling for light fitments and steel hooks **(7)** to facilitate lifting of the bathroom units are provided in the wall reinforcements **(3)**. Space for light control boxes **(22)** are cast into the wall together with the conduits **(10)** to avoid the necessity for any cutting work once the bathroom unit has been erected and hence speed up the installation process. Openings for windows **(5)** and drainage **(6)** are also provided for in the wall reinforcement.

[0044] Steel moulds **(4)** are then fixed around the wall reinforcement **(3)** into which concrete is poured to cast the walls.

[0045] Once the slab and walls have been cast in concrete the open roof space of the bathroom unit can then be completed by formwork **(8)** being attached to the opening at the top of the bathroom unit. The roof slab **(9)** can then be cast.

[0046] Alternatively the roof slab **(9)** and the walls of the prefabricated bathroom can be cast in one pour when lightweight formwork such as timber is used. Water proofing, internal tiling and other finishing work can then be carried out to complete the bathroom unit.

[0047] FIGS. **5-9** illustrate the installation sequence of the prefabricated bathroom unit on site.

[0048] The location where the bathroom unit will sit **(15)** is levelled out and is then provided with levelled bearing pads **(11)** at various points and a layer of cement sand slurry. The external structural wall **(12)** has openings for windows and drainage **(14)** which correspond with the openings on the bathroom unit **(5** and **6)**. The external structural wall **(12)** is also disposed with a recess **(13)** to ensure a tight fit for the bathroom unit.

[0049] A thin strip of compressible material is then attached to the inner face of the external structural wall and the inner face of the various openings **(16)**.

[0050] The prefabricated unit is then lowered into place, using the steel hooks **(7)** for lifting purposes, so that the unit sits on the levelled bearing pads **(11)**. The bottom surface of the base slab of the bathroom unit is disposed with recesses **(18)** to ensure that there is a tight fit between the floor **(17)** and the bathroom unit.

[0051] Once the bathroom unit is seated at the desired location the joint between the bathroom unit and the external wall **(19)** can be filled with non shrink grout to the edges of the joint to create a water tight finish. Entry can be gained to the bathroom unit through the door of the unit **(20)** to enable internal final touching up to be carried out.

[0052] Precast slabs **(21)** are then laid on top of the bathroom unit to create the floor of the level above. A topping slab can then be cast in situ to complete the floor and work can then commence on the installation of the external precast facade of the floor above.

1. A method of construction of a self contained bathroom unit capable of installation in multi-storey buildings wherein the bathroom unit may be prefabricated at a site remote from the installation site and wherein the bathroom unit consists of a slab unit, four wall units and a roof unit all of which are constructed using reinforcement and concrete of the appropriate strength and wherein the said bathroom unit may be disposed with conduits and with openings and spaces within the wall units in accordance with the design of the building and wherein the slab unit may be disposed with recesses on the bottom surface.

2. A method of construction of a bathroom unit as claimed in claim 1 above wherein the base of the bathroom unit is cast by pouring concrete of the appropriate strength over slab reinforcement of the desired size.

3. A method of construction of a bathroom unit as claimed in claim 1 above wherein the walls of the unit are formed by

fixing reinforcement of the appropriate configuration to the slab unit and wherein hooks and conduits are disposed within the wall reinforcement and wherein the wall reinforcement is disposed with suitable openings and spaces and wherein the reinforcement is surrounded by suitable formwork and wherein concrete of the appropriate strength is poured into the formwork.

4. A method of construction of a bathroom unit as claimed in claim 1 wherein the roof slab is cast by fixing formwork in the roof space of the precast bathroom unit and pouring concrete over the formwork.

5. A method of installation of a prefabricated bathroom unit in a multi-storey building wherein the bathroom unit may be seated on suitable levelled pads disposed at various points on the floor surface where the unit will be installed and wherein a layer of cement sand slurry has been applied to the floor surface.

6. A method of installation of a prefabricated bathroom unit as claimed in claim 5 above wherein a layer of suitable compressible material may be attached by suitable means to the inner face of the external structural walls and openings in the structural walls

7. A method of installation of a prefabricated bathroom unit as claimed in claim 5 above wherein the joint between the structural wall and the bathroom unit may be sealed by means of a non-shrink grout of other suitable non-shrink material.

8. A method of installation of a prefabricated bathroom unit as claimed in claim 5 above wherein the top slab of the bathroom unit may be used to form the formwork for the topping slab which forms the floor of the unit above and which maybe cast in situ.

9. A method of installation of a prefabricated bathroom unit as claimed in claim 5 above where in the inner face of the structural walls may be disposed with a recess.

* * * * *