Feb. 16, 1965 J. ENGALITCHEFF, JR., ETAL 3,169,575

EVAPORATIVE HEAT EXCHANGER

Filed Oct. 27, 1961 6 Sheets-Sheet 1

Fig. 1.

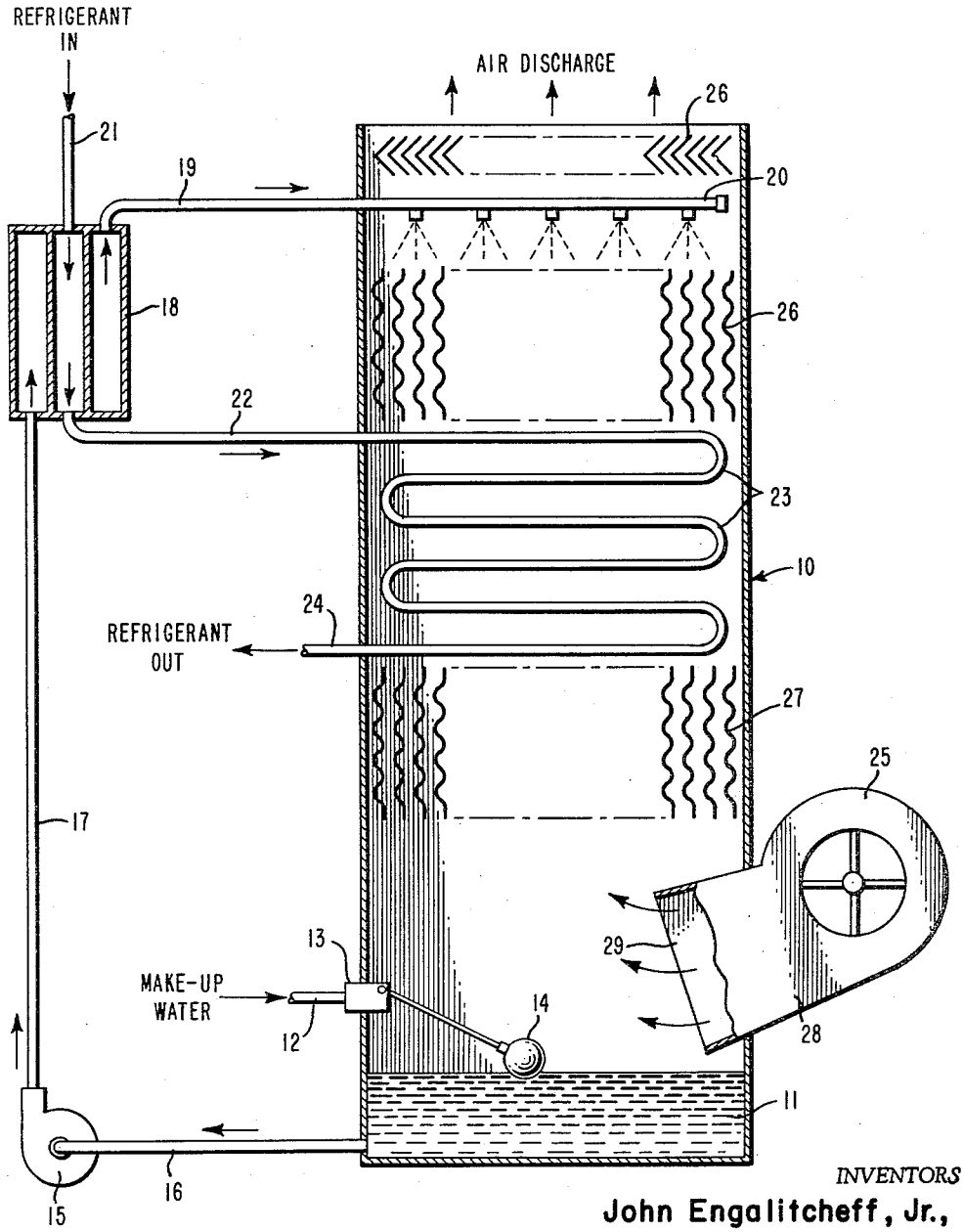

INVENTORS

John Engalitcheff, Jr.,

Thomas F. Facius

BY

Stevens, Davis, Miller & Mosher

ATTORNEYS

Feb. 16, 1965 J. ENGALITCHEFF, JR., ETAL 3,169,575

EVAPORATIVE HEAT EXCHANGER

Filed Oct. 27, 1961 6 Sheets-Sheet 2

Fig. 2.

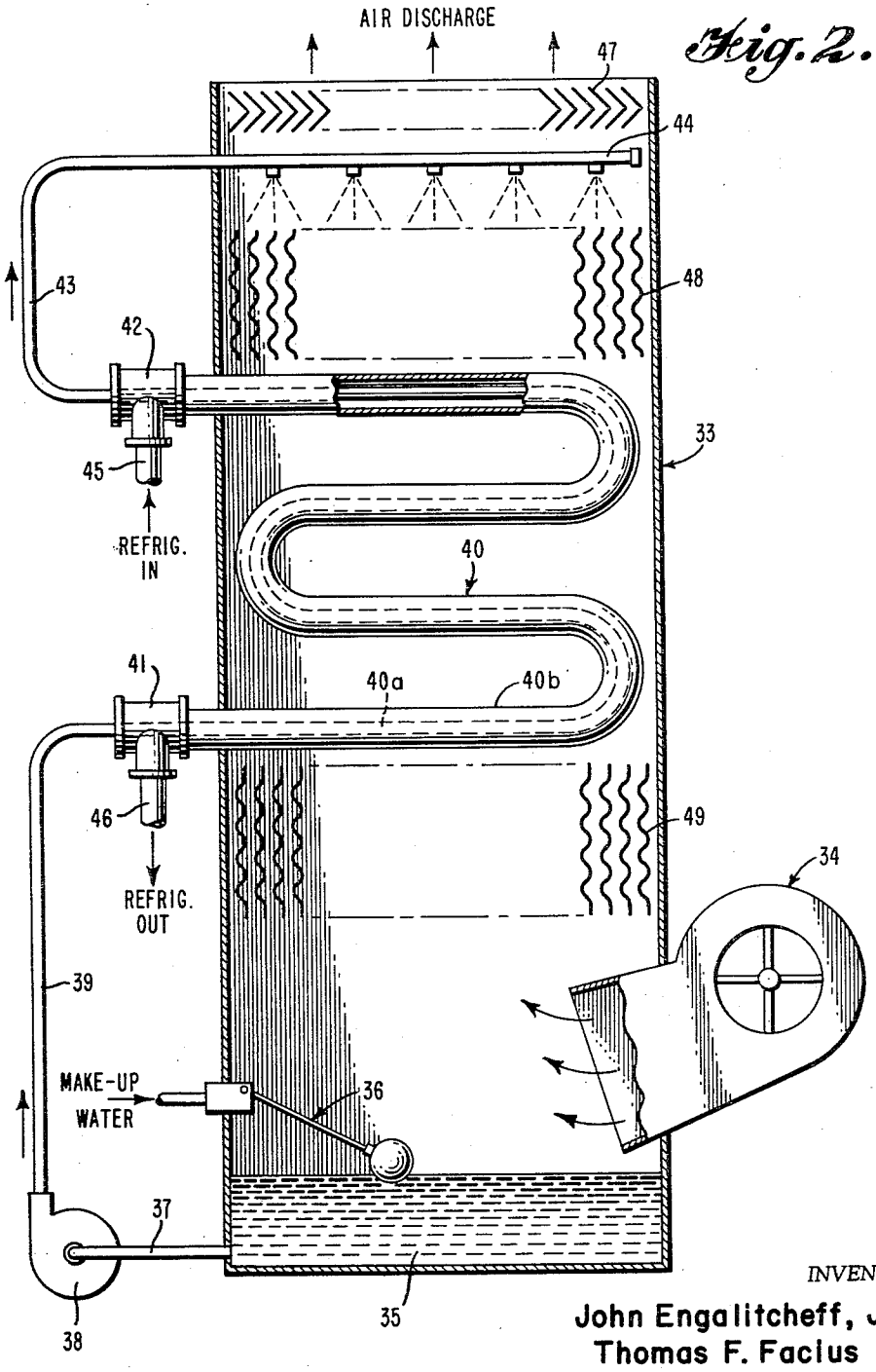

INVENTORS

John Engalitcheff, Jr.,
Thomas F. Facius

BY Stevens, Davis, Miller & Mosher
ATTORNEYS

Feb. 16, 1965 J. ENGALITCHEFF, JR., ETAL 3,169,575

EVAPORATIVE HEAT EXCHANGER

Filed Oct. 27, 1961 6 Sheets-Sheet 3

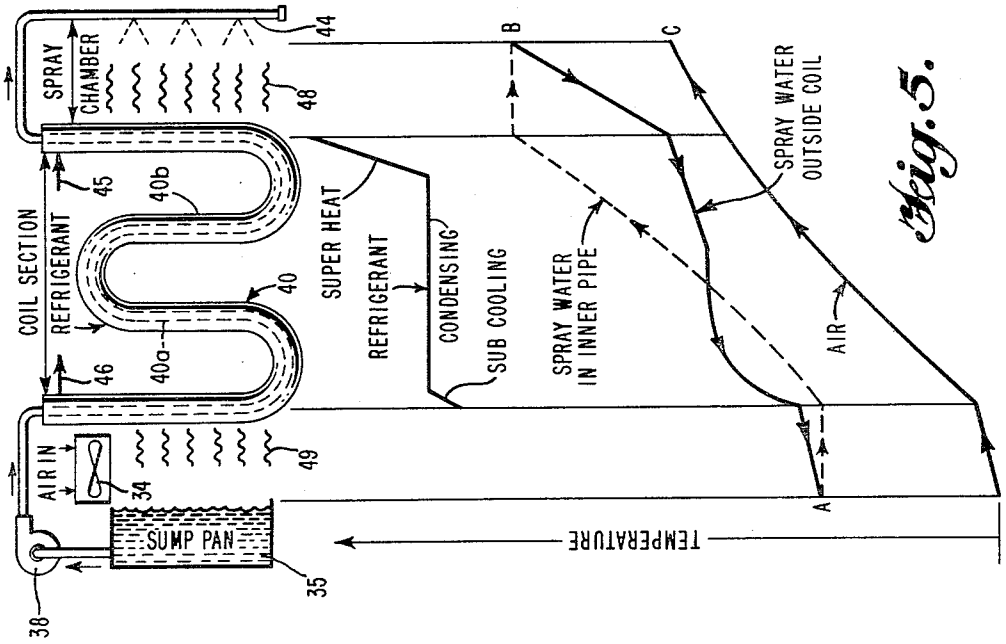

Fig. 5.

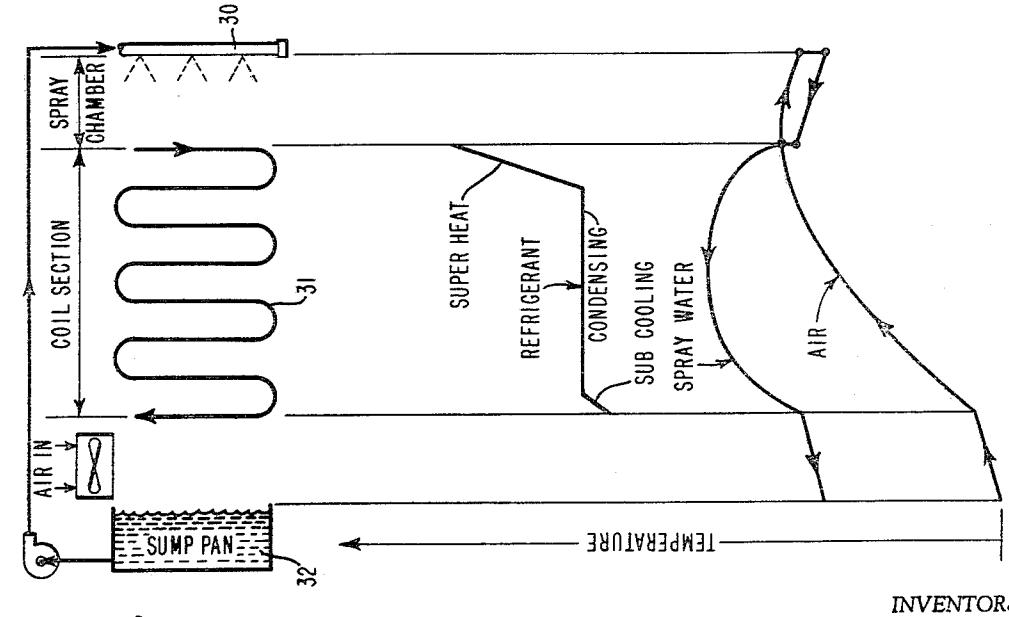

Fig. 3.

INVENTORS

John Engalitcheff, Jr.,
Thomas F. Facius

BY Stevens, Davis, Miller & Mosher
ATTORNEYS

Feb. 16, 1965 J. ENGALITCHEFF, JR., ETAL 3,169,575

EVAPORATIVE HEAT EXCHANGER

Filed Oct. 27, 1961 6 Sheets-Sheet 4

Fig. 4.

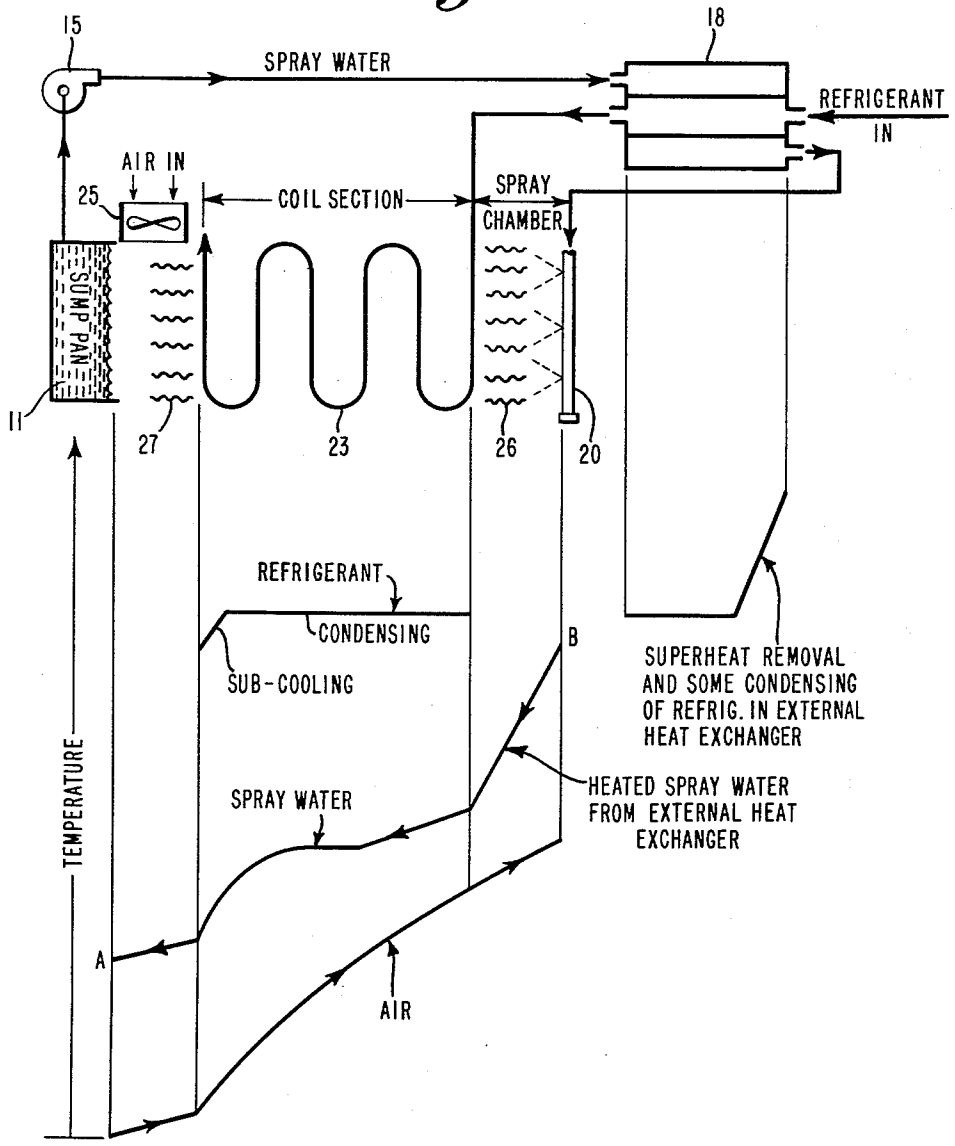

INVENTORS
John Engalitcheff, Jr.,
Thomas F. Facius

BY
Stevens, Davis, Miller & Mosher
ATTORNEYS

Feb. 16, 1965 J. ENGALITCHEFF, JR., ETAL 3,169,575

EVAPORATIVE HEAT EXCHANGER

Filed Oct. 27, 1961 6 Sheets-Sheet 5

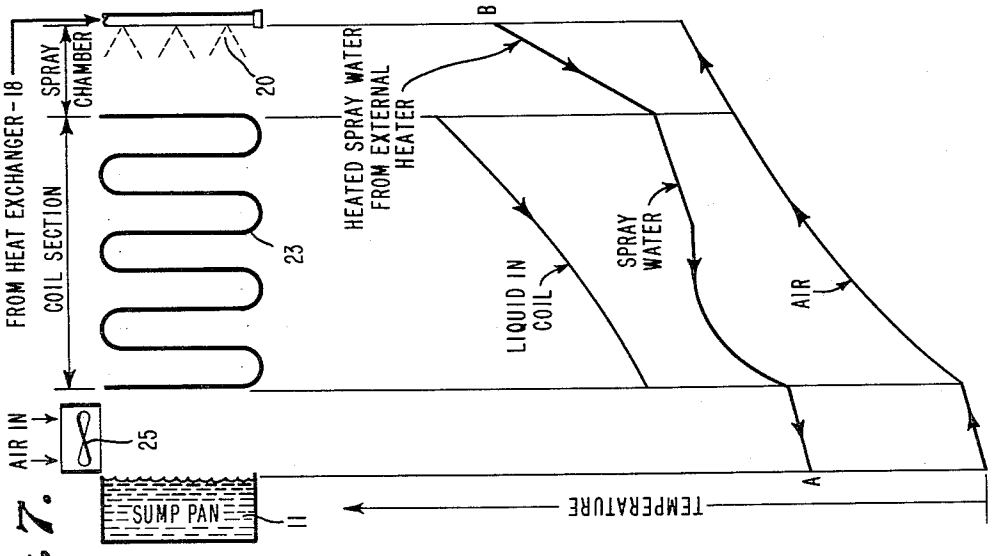

Fig. 7.

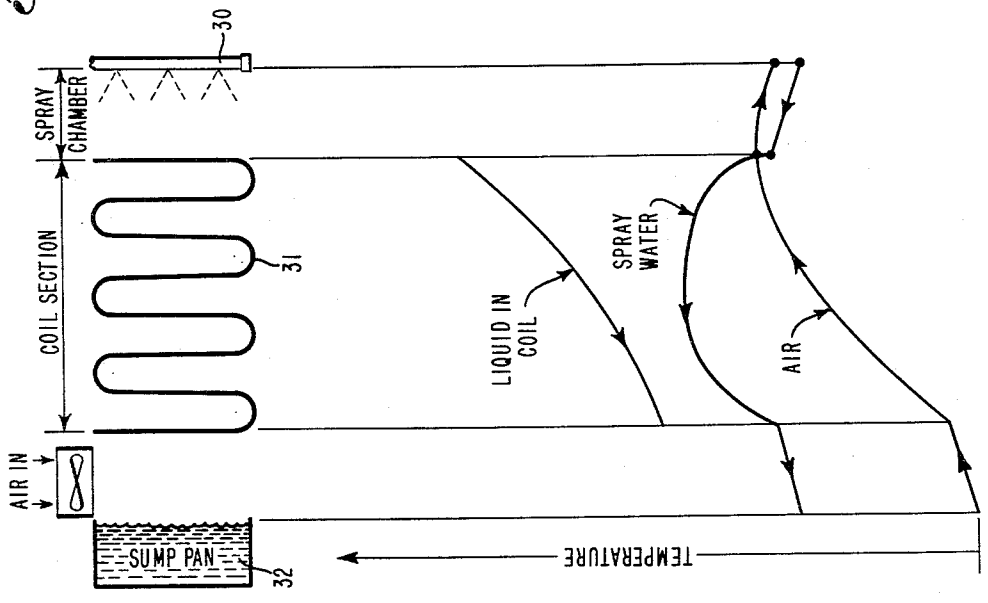

Fig. 6.

INVENTORS
John Engalitcheff, Jr.,
Thomas F. Facius

BY Stevens, Davis, Miller & Mosher
ATTORNEYS

Feb. 16, 1965 J. ENGALITCHEFF, JR., ETAL 3,169,575

EVAPORATIVE HEAT EXCHANGER

Filed Oct. 27, 1961 6 Sheets-Sheet 6

Fig. 8.

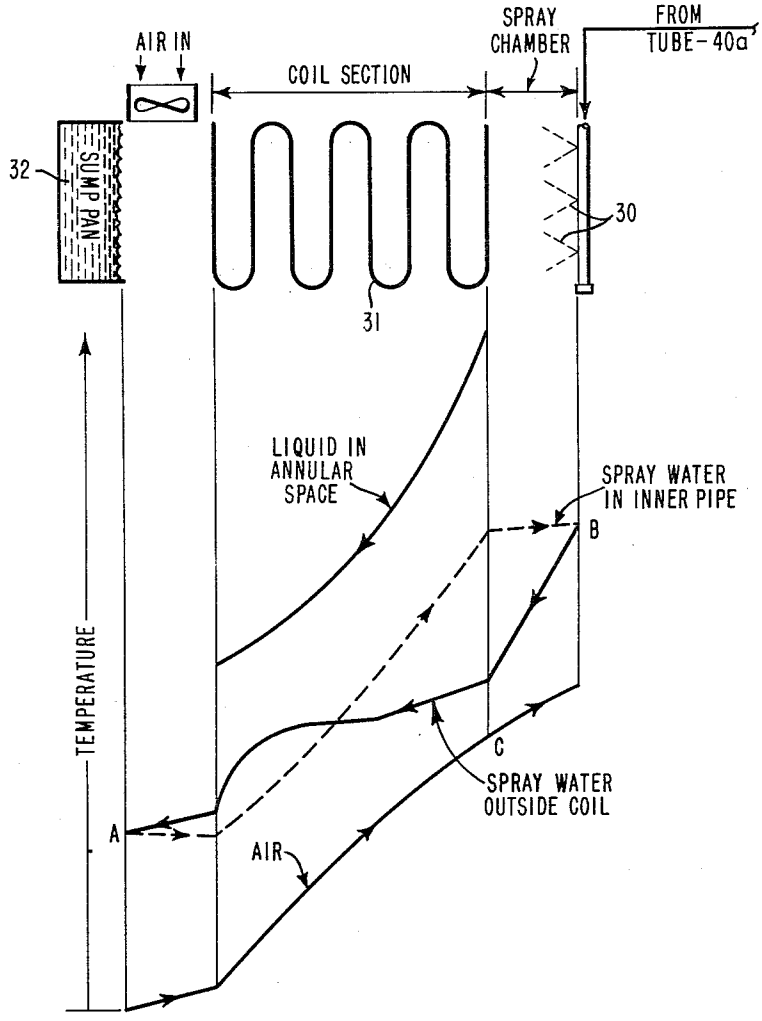

INVENTORS

John Engalitcheff, Jr.,
Thomas F. Facius

BY
Stevens, Davis, Miller & Mosher
ATTORNEYS

United States Patent Office 3,169,575 Patented Feb. 16, 1965

3,169,575

EVAPORATIVE HEAT EXCHANGER

John Engalitcheff, Jr., Gibson Island, and Thomas F. Facius, Baltimore, Md., assignors to Baltimore Aircoil Company, Inc., Baltimore, Md., a corporation of Maryland

Filed Oct. 27, 1961, Ser. No. 148,254
7 Claims. (Cl. 165—1)

This invention relates to evaporative heat exchangers and more particularly to methods and apparatus for extracting heat from fluids in operations such as the condensing of refrigerants and/or the cooling of liquids.

In an evaporative condenser, the fluid from which heat is sought to be extracted is circulated through a coil or tube bank which is disposed in a chamber which has a water reservoir or sump at its bottom. The apparatus is provided with means for flowing air upwardly around the coil while water from the sump is pumped to the top of the tank and sprayed downwardly from a spray tree in droplets which fall countercurrent to the air flowing over the coil. The air circulating counter to the droplets causes a measure of evaporation of the water and the latent heat necessary to support this evaporation is taken from the fluid in the coils.

Now, in a system of the type described above, the spray water leaving the spray tree and before it begins to contact the coil section containing the fluid from which heat is to be extracted, is cooler than the air which has been moving upwardly through the coils to cause evaporation of water. Accordingly between the spray tree and the beginning of the coil section, the air which is leaving the system gives up heat to the counterflowing spray water which is on its way to cooling the coil section. This is a complete waste of cooling capacity, because the air, which has already passed through the coil section, is vented to atmosphere and to cool it at this stage accomplishes nothing except to increase the temperature of the cooling water.

It is proposed according to the present invention to eliminate this waste and so to adjust the relative temperatures of the spray water and the air that the spray moving down to the coil section will be cooled by the counterflowing air leaving the system rather than taking up heat from that air.

It is an object of the present invention to provide an evaporative condenser or other heat exchanger of improved thermal efficiency which is characterized by the capability of maintaining an appreciable temperature difference between the flowing water spray and counterflowing air in the region between the spray header and the coil.

The present invention offers the advantage that by its use the heat extracting capacity of an evaporative condenser or heat exchanger of any given size is increased so that if the present invention is applied to an existing installation it will increase its cooling capacity. Of course, if the same cooling capacity is desired then, with the present invention, it can be achieved with smaller equipment.

Other objects and advantages of this invention will be apparent upon consideration of the following detailed description of several embodiments thereof in conjunction with the annexed drawings wherein:

FIGURE 1 is a schematic view in vertical section of an evaporative condenser constructed in accordance with the principles of the present invention to incorporate a heat exchanger through which the spray water passes and is preheated on its way to the spray head, the heat exchanger being physically separate from the condenser casing;

FIGURE 2 is a view in vertical section showing a

preferred embodiment of the present invention in which the spray water is passed to the spray head as the inside phase of the refrigerant condensing system, whereby to preheat the spray water to a temperature above that of the air leaving the casing;

FIGURE 3 is a graphic representation of the relative temperatures of the various heat exchange media in different zones of a conventional evaporative condenser;

FIGURE 4 is a graphic representation of the relative temperatures of the air, the spray water and refrigerant in the various regions of a sytsem such as that shown in FIGURE 1;

FIGURE 5 is a view similar to that of FIGURE 4, but showing relative temperatures of the heat exchange media in various zones of a system such as that shown in FIGURE 2;

FIGURE 6 is a view similar to FIGURE 3, but representing the relative temperature curves of air, spray water, and fluid to have heat extracted therefrom where the coil contains a liquid which is being cooled by the extraction of sensible heat as distinct from latent heat;

FIGURE 7 is a graphic representation of the relative temperature of air, spray water and liquid to be cooled under conditions which would prevail if the apparatus of FIGURE 1 were used to cool a liquid rather than to condense a refrigerant gas; and

FIGURE 8 is a view similar to FIGURE 7 but showing the relative temperature curves for air, spray water and a liquid to be cooled as these would be in the various zones in the apparatus of FIGURE 2 if that apparatus were used to cool a liquid rather than to condense a refrigerant.

Referring now to the drawings in greater detail, and in particular to FIGURE 1, the numeral 10 represents the casing of an evaporative condenser. This casing may be a vertically disposed cylinder or may be of a rectangular or other cross section. In any event, in the bottom of the casing 10 there is provided a reservoir or sump 11 for spray water, and this reservoir is maintained at a predetermined level by make-up water supplied by a conduit 12 through a float valve 13 of conventional construction controlled by a float 14. Water from the reservoir 11 is withdrawn by a pump 15 through a conduit 16 and delivered through a conduit 17 to a heat exchanger diagrammatically indicated at 18. The cooling water is one phase of the heat exchange taking place in heat exchanger 18. The liquid which enters heat exchanger 18 from conduit 17, passes through the heat exchanger and leaves through the conduit 19 to spray tree 20. The other phase in the heat exchanger 18 is the hot refrigerant to be cooled and condensed which comes to the heat exchanger 18 through a conduit 21, gives up some of its heat to the spray water, and leaves through conduit 22 from which it is delivered to the coils 23 in the casing 10. The condensed refrigerant leaves the condenser through conduit 24. The refrigerant is only partly cooled in heat exchanger 18, but the principal condensing of the same takes place in the coils 23. To this end, the cooling water is sprayed over the coils 23 in droplet form and the water temperature is kept low by evaporation induced by air flow caused by a fan 25 which pumps air vertically upwardly through the casing 10 countercurrent to the spray water which is falling by gravity. Drift eliminators 26 catch the water in the air which is leaving the system and return it to the system.

Above and below the coils 23 there are located wet deck sections 26 and 27. These wet deck sections are merely groups of corrugated metal sheets disposed in mutually parallel relation in such a way as to collect water on their surfaces for evaporation by the air passing thereacross. This, of course, has the effect of cooling the

water droplets flowing to and flowing from the coils 23. The wet decks are of the construction more fully disclosed in an application of John Engalitcheff, Serial No. 552,080, filed December 9, 1955.

The fan 25 is provided with a discharge duct 28 which progressively increases in cross sectional area from the discharge side of the fan to a mouth 29 located substantially within the confines of the casing 10. It has been found that by connecting the output of the fan to ducting of increasing cross sectional area it is possible to keep the fan from sucking water into itself along the margins of its own air exhaust duct.

In FIGURES 3 and 4 there are set forth curves representing relative temperature changes which occur in evaporative heat exchangers. The curves of FIGURE 3 represent the conventional heat exchanger while those of FIGURE 4 represent the heat exchanger of the present invention. In FIGURE 3 there is diagrammatically represented a spray tree 30, a coil section 31, a sump 32 and a fan 33. In actual structures these are arranged vertically, but in FIGURE 3 they are diagrammed horizontally to correlate the apparatus with the temperature curves. The abscissa of these curves represent position in the system, while the ordinates represent temperature, rising in the direction of the arrow. The refrigerant entering the top of a conventional system contains some superheat. This is extracted in the upper part of the coil section. Thereafter, heat of vaporization is extracted as the refrigerant changes from gaseous to liquid phase, and then, at the very bottom of the coil section 31, a small amount of sub-cooling occurs.

Now in FIGURE 3 where there is no heat exchanger such as heat exchanger 18, the air entering the "spray chamber" zone is the hottest air in the entire system, see the right side of FIGURE 3. The water is at about the temperature prevailing in the reservoir 32, and it has been found that this temperature is regularly and appreciably below the temperature of air leaving the uppermost pass of the coils 31. Obviously, if the air is warmer than the water, the water will cool the air and then this air will be forthwith vented to atmosphere. Aside from this waste, the temperature difference between air and spray water does not get to a desired level until the spray water has progressed a fair distance into the coil system.

On the other hand with applicants' improvement the spray water is not led from the reservoir directly to the spray head 20, but instead is first passed through the heat exchanger 18. The effect of this is set forth in FIGURE 4 which is a diagram made in the same fashion as FIGURE 3 to show graphically the advantage of the construction of FIGURE 1 over the prior art the function of which is set out in FIGURE 3. In FIGURE 4 the parts which appear diagrammatically bear the reference numerals of the equivalent parts in FIGURE 1. By comparing FIGURES 3 and 4 the advantage of passing the cooling water through the heat exchanger 18 on its way to the spray tree is graphically apparent. Note that the spray water in passing through heat exchanger 18 has its temperature raised from level A to level B, see FIGURE 4, so that the water entering the spray tree 20 is much warmer than the air leaving the casing 10, with the result that the entering water is cooled and the leaving air continues to pick up heat with the result that the water at the moment of commencement of spray is already, and continues to be all the way through the coils 23, much warmer than the air which is cooling it. The increase in the temperature of the spray water entering the spray chamber would, of course, not result in increased efficiency except for the fact that the heat which causes the rise from its entering temperature as shown in FIGURE 3 to the entering temperature as shown in FIGURE 4 is derived from the material to be cooled, i.e. the refrigerant. This material has the superheat removed before it enters coil 23 with the result that the amount of condensing per unit of surface of the equipment is increased.

As shown in FIGURE 4 condensation may commence in the heat exchanger 18.

In FIGURE 1 the achievement of the rise in temperature of the cooling water before its entry into the spray trees 20 is accomplished by a heat exchanger which is physically separate from the evaporative condenser casing. In FIGURE 2 there is shown a very efficient arrangement wherein the preheating of the cooled water is accomplished first by flowing it countercurrent to the refrigerant as the inside phase of a dual heat exchanger, the outside phase of which is between the refrigerant and the spray of cooling water from the spray trees.

In FIGURE 2 the evaporative heat exchanger casing is defined by numeral 33. A fan 34 is provided to pump air substantially vertically through the casing from bottom to top. At the bottom of the tower there is a water reservoir or sump 35 provided with a float operated make-up valve generally designated at 36. Cooling water is withdrawn from the sump 35 through a pipe 37 leading to the intake of a pump 38. The pump 38 delivers the water through a conduit 29 which enters the inner tube 40*a* of concentric tube heat exchange coil 40 through a suitable end fitting 41. Through a similar end fitting 42 the cooling water leaves the coil 40 and is delivered by a pipe 43 to spray tree 44. The coils 40 are fed with refrigerant through a conduit 45 leading to the outer tube 40*b* of the coil 40. The refrigerant is withdrawn through a conduit 46. The refrigerant circulates in an annular zone through the coil 40 surrounding the tube 40*a* which contains the coolant water, the outer surface of the refrigerant tube 40*b* being exposed to the cooling droplets of water issuing from the spray trees 44. It will be noted that the water is flowing upwardly through the coil 40*a* counter to the downward flow of the refrigerant to be condensed in tube 40*b*. On the other hand, the spray issuing from the spray trees 44 is flowing generally concurrently with the refrigerant to be condensed while both the spray and the liquid to be cooled are flowing countercurrently to the air. Drift eliminators 47 similar in structure and function to eliminators 26 are provided at the top of the casing 33. Wet deck sections 48 and 49 are provided, section 48 being between the spray trees 44 and the coil 40, and section 49 being between the coil 40 and the sump 35. These sections 48 and 49 correspond respectively in structure and function to sections 26 and 27 shown in FIGURE 1.

The effect of these wet deck sections is to improve the air-water contact thereby to increase evaporation of the water and to improve the amount of cooling that can be accomplished per unit length of fall of the cooling water.

FIGURE 5 is a diagrammatic illustration in the style of FIGURE 4 but is prepared to show the relative temperature curves for the refrigerant, the spray water and the air as they move through the apparatus of FIGURE 2. The diagrammatic parts of the system of FIGURE 5 bear the same numbers as have been assigned to those parts in FIGURE 2. The broken line indicates the spray water in the inner pipe during the preheat operation. Note that it is preheated from a sump temperature indicated at A to a spray tree temperature indciated at B and that A is much lower than the air temperature at C although the temperature at B is much higher than the air temperature at C. The full line designation of the spray water in FIGURE 5 represents the relative temperature changes which take place in the flow of this water from the spray trees 44 back to the sump.

While FIGURE 5 indicates a measure of superheat of the refrigerant upon entering the coil 40, it should be noted that this superheat is dissipated much more rapidly than in conventional apparatus due to the fact that the refrigerant is having heat extracted from both the inner and outer surfaces of its annular path.

Of course, in the condensation of a refrigerant, a temperature curve representing heat extraction is a straight line since there is no change in sensible heat, the extracted

heat going to bring about a change in state, i.e., from gas to liquid. Accordingly, the refrigerant curves in FIGURES 3, 4, and 5 are essentially straight lines. The apparatus of the present invention is, however, quite suitable for cooling liquids, i.e., the extraction of sensible heat from a liquid. In FIGURES 6, 7, and 8 there are shown temperature curves quite similar to those shown in FIGURES 3, 4, and 5 respectively except that the fluid from which heat is extracted is a liquid rather than a gas. The curves of FIGURES 6, 7, and 8, therefore, represent the change in relative temperature which occurs in extracting heat from a liquid which stays in liquid phase throughout the entire passage through the coil section. FIGURE 6 represents the prior art evaporative heat exchanger as it deals with the cooling of a liquid. FIGURE 7 represents the apparatus of FIGURE 1 used for cooling a liquid or other fluid as distinct from condensing and FIGURE 8 represents the use of the apparatus of FIGURE 2 for cooling instead of condensing. By studying the temperature curves of these figures it can be seen that the advantage of passing the cooling water in heat exchange relationship to the incoming material from which heat is to be extracted applies regardless of whether the heat is extracted for the purpose of reducing the sensible heat, i.e., the measurable temperature of a fluid, or for the purpose of bringing about a change of state.

While wet deck sections are shown in both of FIGURES 1 and 2, these are operational to the system and may be removed if desired. The heating of the entering spray water with the entering fluid to have heat extracted from it increases the entering temperature of the spray water as shown in FIGURES 4 and 7, and thus establishes a larger than conventional temperature difference between the air and the spray water, this temperature difference has a counterbalancing effect on the smaller temperature difference between the fluid in the coil **23** and the spray water. In this section of the evaporative heat exchanger using the heated spray water from the external heater **18**, there is only a small reduction in capacity as compared to the same section of a conventional heat exchanger (10%–15%). The external heater accounts for additional capacity as much as 40%–50%. This results in a net gain of approximately 35% more capacity than a conventional evaporative heat exchanger. The use of the double pipe heat exchanger shown in FIGURE 2 results in additional capacity as compared to the FIGURE 1 system. In the case of FIGURE 2, there is a larger temperature difference between the spray water and the fluid in the annular space. This is because the fluid entering the double pipe coil is at its highest temperature.

What is claimed is:

1. The method of improving the efficiency of evaporative heat extraction that comprises as the first step in extracting heat from a fluid that has absorbed heat, passing said fluid to have heat extracted therefrom and a cooling liquid in mutual heat exchange relation without evaporation of said cooling liquid and then passing the same fluid and of all said liquid in mutual heat exchange relation while evaporating at least a portion of said cooling liquid.

2. The method of improving the efficiency of evaporative heat extraction that comprises as the first step in extracting heat from a fluid that has absorbed heat, passing said fluid to have heat extracted therefrom and a cooling liquid in mutual heat exchange relation without evaporation of said cooling liquid and then passing the same fluid and of all said liquid in mutual heat exchange relation while evaporating at least a portion of said cooling liquid by direct contact with a counterflowing air appreciably cooler than said cooling liquid at the beginning of the contact.

3. The method of improving the efficiency of evaporative cooling that comprises passing the fluid to have heat extracted therefrom and the cooling liquid in countercurrent flow, indirect heat exchange relationship and then without introducing additional heat to said liquid passing said fluid and all of said liquid in concurrent flow, indirect heat exchange relationship while evaporating a portion of the cooling liquid.

4. Apparatus for cooling fluids under conditions of high thermal efficiency that comprises a coil, means to pass the fluid to be cooled into the top of said coil and to withdraw it from the bottom of said coil, means for spraying cooling water downwardly over said coil, means below said coil to collect water, means to cause a flow of air upwardly through said coil and counter to said spray and means defining a flow path from said collecting means to said spray means and means in said flow path for passing said water in heat exchange relation to said fluid to be cooled before said liquid enters the top of said coil.

5. Apparatus for cooling fluids under conditions of high thermal efficiency that comprises a coil, means to pass the fluid to be cooled into the top of said coil and to withdraw it from the bottom of said coil, means for spraying cooling water downwardly over said coil, means below said coil to collect water, means to cause a flow of air upwardly through said coil and counter to said spray and means defining a flow path from said water-collecting means to said spraying means, said flow path including a passageway through said coil to provide for countercurrent flow, indirect heat exchange between the fluid to be cooled and the water flowing from the water collecting means to the spraying means.

6. Apparatus as claimed in claim 4 further comprising a wet deck section in the region of counterflow of air and spray.

7. Apparatus as claimed in claim 5 further comprising a wet deck section in the region of counterflow of air and spray.

References Cited by the Examiner

UNITED STATES PATENTS

1,732,963	10/29	Burhorn	62—310
2,166,158	7/39	Kalischer	62—513
2,257,983	10/41	Shipman	62—305
2,787,134	4/57	Boling	62—305

CHARLES SUKALO, *Primary Examiner.*

HERBERT L. MARTIN, FREDERICK L. MATTESON, JR., PERCY L. PATRICK, *Examiners.*