W. MELAS.

OIL BURNER ATTACHMENT.

APPLICATION FILED SEPT. 5, 1913.

1,118,506. **Patented Nov. 24, 1914.**

2 SHEETS—SHEET 1.

FIG. III.

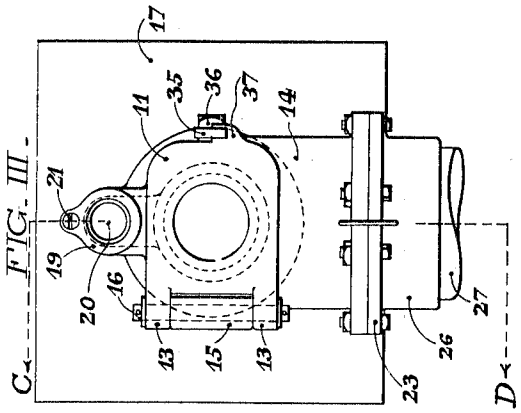

FIG. II.

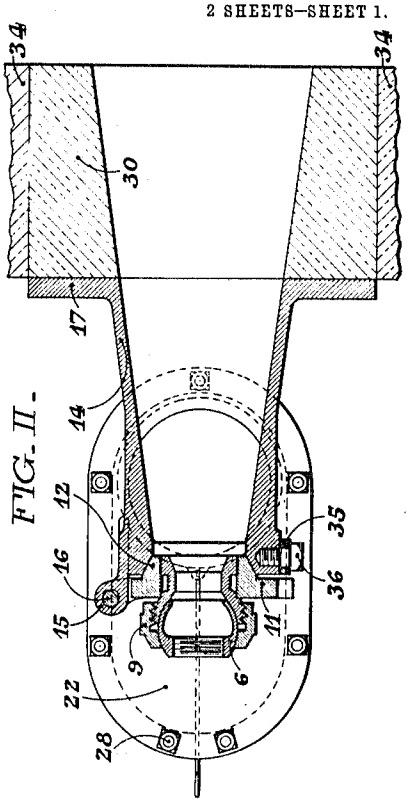

FIG. I.

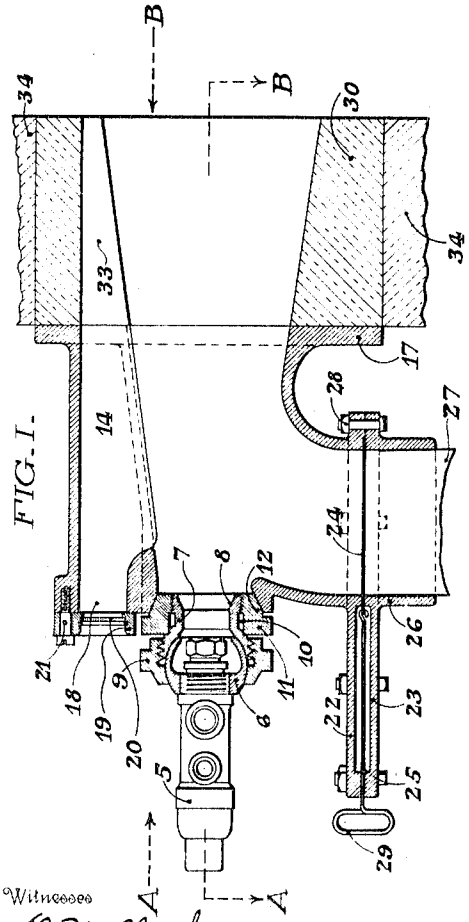

FIG. IV.

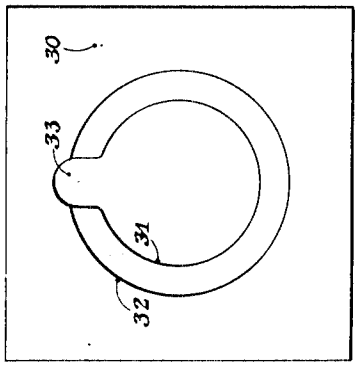

Witnesses

O. M. Bochm

Harry P. Greeves.

Inventor

William Melas

W. MELAS.

OIL BURNER ATTACHMENT.

APPLICATION FILED SEPT. 5, 1913.

1,118,506.

Patented Nov. 24, 1914.

2 SHEETS—SHEET 2.

FIG. VI.

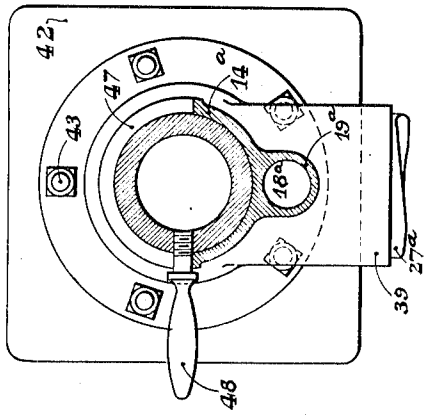

FIG. VIII.

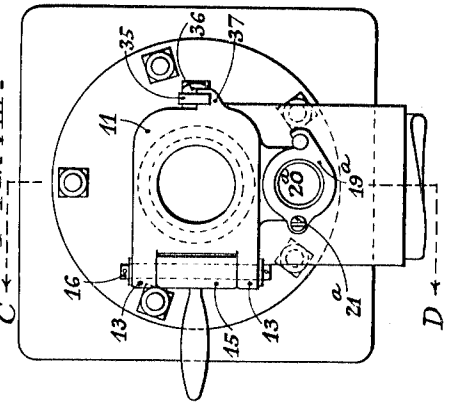

FIG. V.

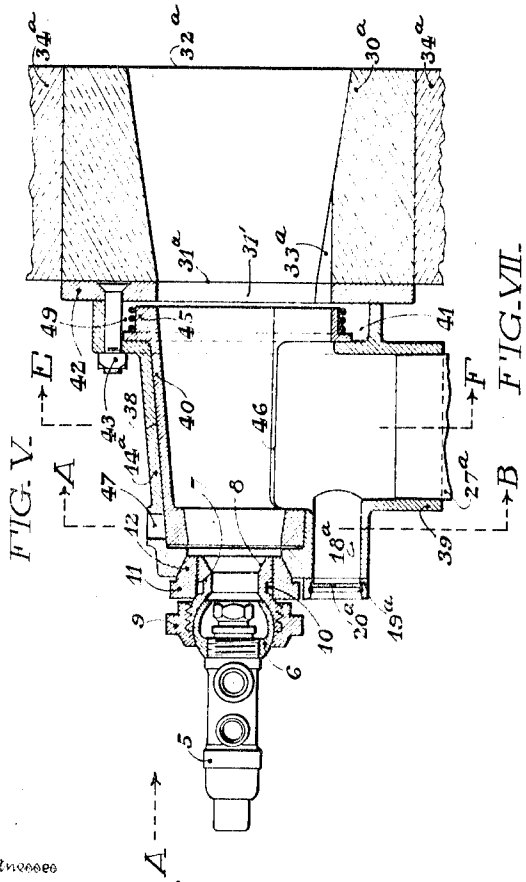

FIG. VII.

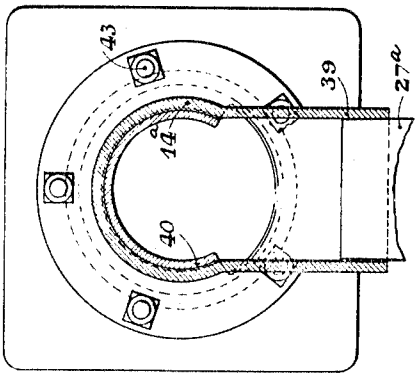

Witnesses

O. M. Boehm.

Harry P. Greeves.

Inventor

William Melas

UNITED STATES PATENT OFFICE.

WILLIAM MELAS, OF RIDLEY PARK, PENNSYLVANIA, ASSIGNOR OF ONE-HALF TO DAVID TOWNSEND, OF PHILADELPHIA, PENNSYLVANIA.

OIL-BURNER ATTACHMENT.

1,118,506. Specification of Letters Patent. Patented Nov. 24, 1914.

Application filed September 5, 1913. Serial No. 788,292.

To all whom it may concern:

Be it known that I, WILLIAM MELAS, a citizen of the United States, residing at Ridley Park, in the county of Delaware and State of Pennsylvania, have invented certain new and useful Improvements in Oil-Burner Attachments, of which the following is a specification.

In oil fired furnaces the burners are usually held in fixed relation to the opening through which the spray is delivered into the furnace. Where worked in combination with a supplementary hot or cold blast the spray is usually blown through the blast, is thereby deflected from its intended course and partly thrown against blast pipe surfaces or delivery-hole surfaces where the atomized oil collects again in drops, thus not only lowering the efficiency of the burner, but also causing premature ignition of spray and development of heat where it is not wanted. Where high pressure burners are used a considerable noise is oftentimes experienced if the spray is not completely inclosed or if the burner is not in air tight connection with the furnace. A rigidly connected, non-removable burner is always subjected to the radiating heat from the furnace inlet and is not readily accessible for cleaning or inspecting or adjusting the atomizing parts, which usually will carbonize and especially so when the burner is not removed from the furnace after the shut downs.

It is the object of my invention to overcome these difficulties by providing a burner attachment combined with a suitable refractory spray inlet, to make the direction of spray subject to adjustments in all directions within certain limits; to provide means for making the burner readily accessible for inspection of the atomizing parts without detaching it from the line; to provide means for attaching the burner air tight to the furnace so as to avoid or greatly subdue the noise inherent to the operation of high pressure burners; to provide means whereby the condition of spray or flame can be observed; to provide means whereby the escape of blast can be prevented while the burner is not in operation and to provide means whereby the blast can be regulated at the attachment.

The means aforementioned are illustrated in the accompanying drawings which show the three forms of my invention and it will be noted that in each drawing the same figures denote the same part.

Figure I denotes a section through the burner attachment along the line C—D of Fig. III and viewed as indicated by the arrows. Fig. II denotes a section through the burner attachment along the line A—B of Fig. I and viewed as indicated by the arrows, the burner, however, being removed. Fig. III is an end view of burner attachment as viewed from A of Fig. I, the burner, however, being removed. Fig. IV denotes an end view of refractory inlet block as viewed from B of Fig. I. Fig. V denotes a section through burner attachment of another form of my invention along the line C—D on Fig. VIII and viewed as indicated by the arrows. Fig. VI denotes a section along the line A—B of Fig. V and viewed as indicated by the arrows. Fig. VII denotes a section along the line of E—F of Fig. V and viewed as indicated by the arrows. Fig. VIII denotes an end view of burner attachment as viewed from A of Fig. V, the burner, however, being removed.

In Figs. I, II, III and IV—5 shows a burner the discharge end of which is screwed into the hollow ball zone 6, the inner part of which fits into the socket 7, said socket being also hollow and having a flaring opening 8 opposite the ball seat. The socket has two outside threads, one near the flaring opening and one near the ball seat and between the threads is a groove or offset 10 which forms a seat against the face of door 11, when socket 7 is screwed into opening of door 11. The ball zone 6 with burner 5 is adjustably connected to socket 7 by nut 9, having a spherical bore. The burner 5 being connected to the stationary air or steam and oil supply pipes by suitable means, such as flexible hose, has by the means aforedescribed a universal adjustment of limited range. Door 11 has a conical projection 12 on its inner face in axial alinement with opening into which socket 7 is screwed. Said projection fits a conical seat in blast attachment 14 to which door 11 is connected by hinges 13 on door and lug 15 on blast attachment. 16 denotes the hinge pin. The door 11 can be locked by latch 35 which fits a projection 37 on door

and swings around bolt 36. The arrangement aforedescribed enables the burner to be swung out from its working position for adjustment, cleaning and for protection from radiating heat after shut-downs, thereby obviating the carbonization at the atomizing parts.

Blast attachment 14 has a peephole 18 over the door opening, which hole is covered ordinarily by a cover 19, swinging on bolt 21 and being fitted with a glass plate 20 of suitable color to observe conditions of flame etc., in the furnace. The peephole also serves as ignition hole. Blast attachment 14 is in connection with a blast gate 24 having a stem 25 with a handle 29, and being inclosed between the flange 22 of blast attachment and flange 23 of blast connection 26, said flanges being bolted together by bolts 28. The blast connection 26 receives blast pipe 27. The blast attachment 14 has on its face opposite the burner a flange 17 whereby it is butted against the refractory inlet piece 30; said inlet piece is walled in the furnace lining 34 and has a hole which is principally conical; the shape of the outside opening 31 of said hole corresponding with the shape of the opening of blast attachment, taking in the cut-out 33 for peephole. The inside opening 32 of said hole, being larger than 31, takes also in a part of cut-out 33.

In Figs. V, VI, VII and VIII—5 shows a burner, the discharge end of which is screwed into the hollow ball zone 6, the inner part of which fits into the socket 7, said socket being also hollow and having a flaring opening 8 opposite the ball seat. The socket has two outside threads, one near the flaring opening and one near the ball seat and between the threads is a groove or offset 10 which forms a seat against the face of door 11 when socket 7 is screwed into opening of door 11. The ball zone 6 with burner 5 is adjustably connected to socket 7 by nut 9, having a spherical bore. The burner 5, being connected to the stationary air or steam and oil supply pipes by suitable means such as flexible hose, has by the means aforedescribed a universal adjustment of limited range. Door 11 has a conical projection 12 on its inner face in axial alinement with opening into which socket 7 is screwed. Said projection fits a conical seat in blast attachment 14^a to which door 11 is connected by hinges 13 on door and lug 15 on blast attachment. 16 denotes the hinge pin. The door 11 can be locked by latch 35 which fits a projection 37 on door and swings around bolt 36. The arrangement aforedescribed enables the burner to be swung out from its working position for adjustment, cleaning and for protection from radiating heat after shut-downs, thereby obviating the carbonization at the atomizing parts. Blast attachment 14^a has a peephole 18^a under the door opening, which hole is covered ordinarily by a cover 19^a, swinging on bolt 21^a and being fitted with a glass plate 20^a of suitable color to observe conditions of flame etc. in the furnace. The peephole also serves as ignition hole. Blast attachment 14^a has a conical bore 38, flaring toward the furnace and merging into a cylindrical enlargement 41. The conical bore aforementioned is intersected by a cylindrical bore of lower part 39 of blast attachment into which fits blast pipe 27^a. In the conical bore of blast attachment 14^a is movably fitted hollow cock 40 which has an opening 46 for the introduction of blast from pipe 27^a. Opening 46 ends at an angle-shaped circular flange 45 of cock 40, which flange is pressed against the face of cylindrical enlargement 41, by a helical spring 49. Said cock 40 is fitted with a handle 48 located near the inlet end of cock, and the stem of said handle can move in a slot 47 of blast attachment 14^a. The attachment as aforedescribed is fastened to a plate 42 by means of bolts 43; said plate having an opening 31′ corresponding with opening 31^a of refractory inlet piece 30^a. Inlet piece 30^a is walled into the furnace lining 34^a and has a flaring hole with openings 31^a and 32^a and a cut-out 33^a. The regulation of blast is effected by turning cock 40 with handle 48.

Having thus described the scope, details and working of my invention, I claim:—

1. In an adjustable oil burner attachment the combination of a spray adjuster for varying within certain limits the direction of spray emitted from the burner said spray adjuster being capable of a universal movement and having a spray outlet opening; a blast attachment having an air tight connection with the spray adjuster aforesaid and having a blast inlet opening, a spray inlet opening and a discharge opening for the mixture of spray and blast, said discharge opening being opposite and in axial alinement with the spray inlet opening and said blast attachment having a flange to fasten it to a furnace wall and also having means for observing the conditions of the spray, and for shutting off the blast; a refractory inlet block, having an inlet opening of a shape to correspond with the discharge opening of the blast attachment and having an outlet opening of larger area than the inlet opening, both openings being in axial alinement with the spray inlet opening in the blast attachment.

2. In an adjustable oil burner attachment the combination of a spray adjuster for varying within certain limits the direction of spray emitted from the burner, said spray adjuster being capable of a universal movement and having means to attach an oil

burner thereto and having a spray outlet opening; a hinged door, having an air tight connection with the spray adjuster aforesaid and having means to keep it in position when closed; a blast attachment, having an air tight connection with the door aforesaid and having a blast inlet opening, a spray inlet opening and a discharge opening for the mixture of spray and blast, said discharge opening being opposite and in axial alinement with the spray inlet opening, and said blast attachment having a flange to fasten it to a furnace wall and also having means for observing the conditions of the spray, and for shutting off the blast; a refractory inlet block, having an inlet opening of a shape to correspond with the discharge opening of the blast attachment and having an outlet opening of larger area than the inlet opening, both openings being in axial alinement with the spray inlet opening in the blast attachment.

3. In an oil burner attachment the combination of a spray adjuster having means for detachably securing an oil burner thereto and being capable of a universal movement within certain limits; a blast attachment, having means for the admission, discharge and regulation of blast, said blast attachment being in rigid connection with said spray adjuster and with a furnace wall; a refractory inlet block with a central hole, said hole being in communication with the discharge end of said blast attachment.

4. In an oil burner attachment the combination of a burner, having means to connect its discharge end to a zone of a hollow ball; a socket, having a ball seat at one end and a bore in axial alinement with said ball seat and flaring from said seat; a nut having a spherical bore and a thread arranged to engage a thread of said socket; a swing door, having a rigid and air tight connection with said socket and having a conical projection in axial alinement with and surrounding the bore of the socket; a blast attachment in rigid connection with a furnace wall, having a spray inlet, a spray outlet and a blast inlet and having a conical seat to receive air tightly the conical projection of the door; said door being hingedly connected to the blast attachment; means whereby said door can be secured in closed or working position; and means to prevent the escape of blast when the door is swung out from the working position.

In testimony whereof I have affixed my signature in presence of two witnesses.

WILLIAM MELAS.

Witnesses:
DAVID TOWNSEND,
O. M. BOEHM.