United States Patent [19]

Garcia

[11] **3,805,295**

[45] **Apr. 23, 1974**

[54] **SPORT SUIT COLLAR**

[75] Inventor: **Joe N. Garcia,** Wildomar, Calif.

[73] Assignee: **Marshall Yoakum,** Los Angeles, Calif.

[22] Filed: **Aug. 4, 1972**

[21] Appl. No.: **277,872**

Related U.S. Application Data

[63] Continuation-in-part of Ser. No. 208,214, Dec. 15, 1971, Pat. No. 3,742,518.

[52] **U.S. Cl.** **2/79,** 2/127, 2/DIG. 6

[51] **Int. Cl.** **A41d 13/00**

[58] **Field of Search** ..... 2/79, 80, 81, 2.1 A, 2.1 R, 2/127, DIG. 6

[56] **References Cited**

UNITED STATES PATENTS

2,505,239	4/1950	Goldstein	2/80
1,973,421	9/1934	Wallace	2/79 X
2,580,969	1/1952	Stephenson	2/80
3,135,256	6/1964	Gruber	2/DIG. 6
2,663,873	12/1953	Stern	2/79 X
3,691,564	9/1972	La Marre	2/81 X

FOREIGN PATENTS OR APPLICATIONS

786,357	11/1957	Great Britain	2/81
865,555	3/1941	France	2/79
534,100	2/1941	Great Britain	2/79

Primary Examiner—H. Hampton Hunter

Attorney, Agent, or Firm—William W. Haefliger

[57] **ABSTRACT**

A wind resistant suit construction comprises, in combination:

a. an upright suit body with arm sleeves attached thereto, the body having a neck portion,

b. dual zipper connections at the front of said body and extending generally downwardly from the neck portion, the body having a front panel defined between said zipper connections,

c. the neck portion defining overlapping flaps adjacent the top extent of said panel, and

d. there being interconnection layers on the flaps adapted to releasably interconnect in response to pressure exertion pressing said layers together.

2 Claims, 9 Drawing Figures

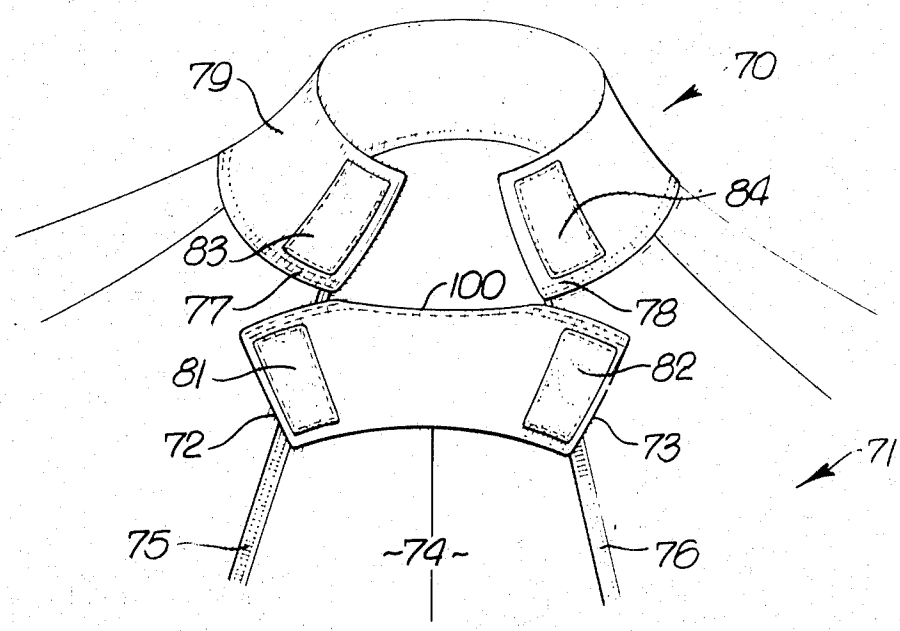

FIG. 1.

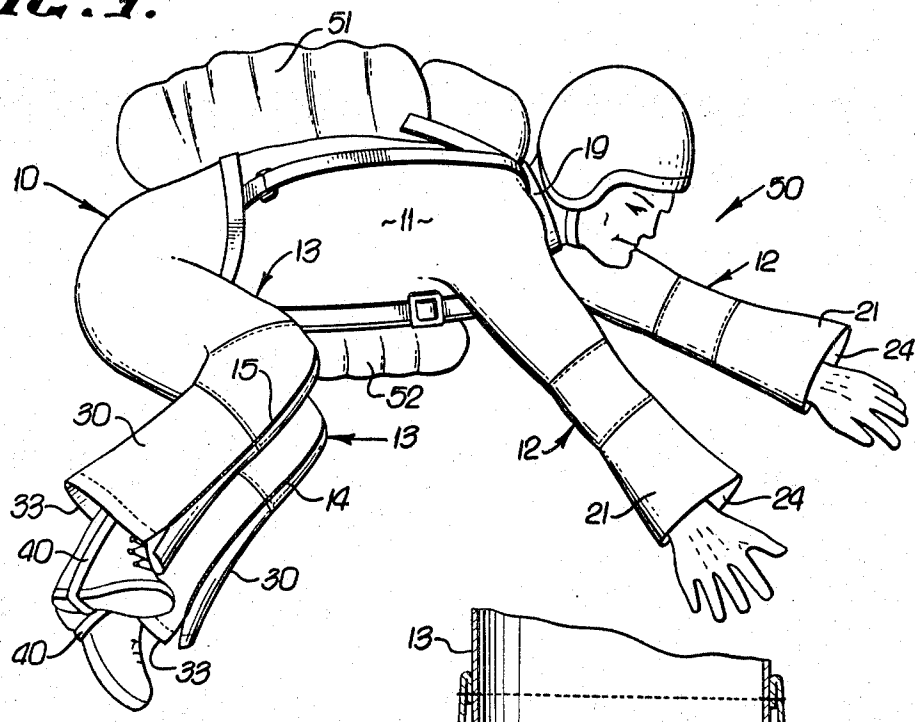

FIG. 6.

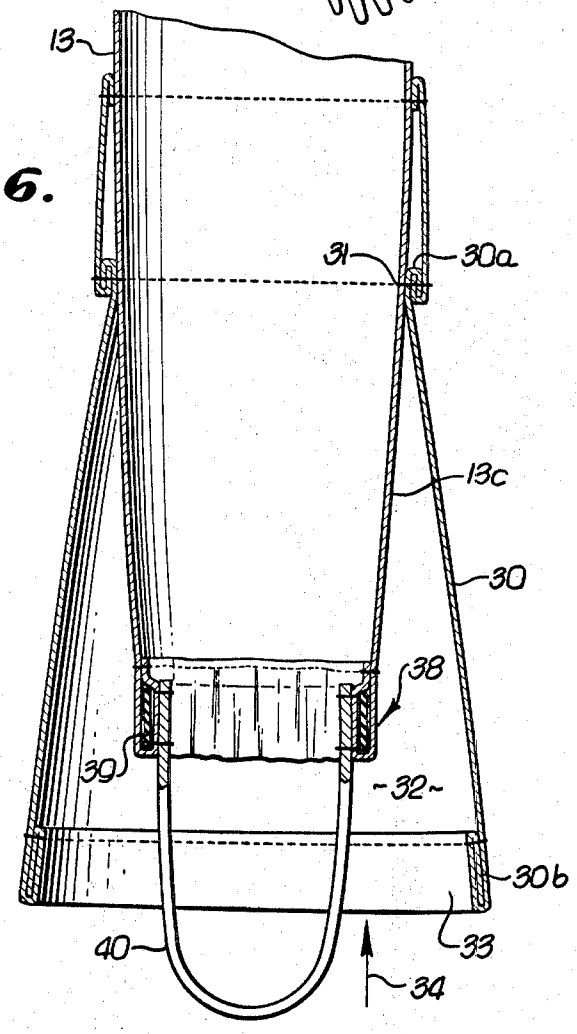

FIG. 5.

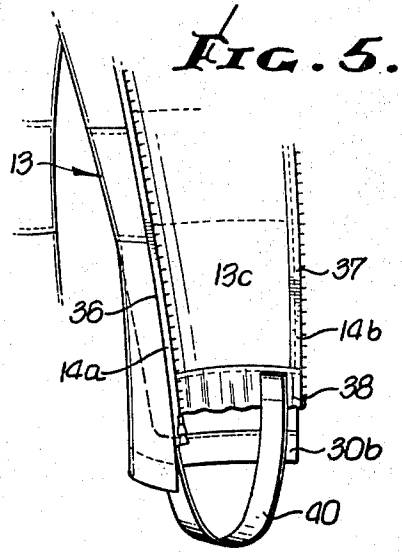

FIG. 2.

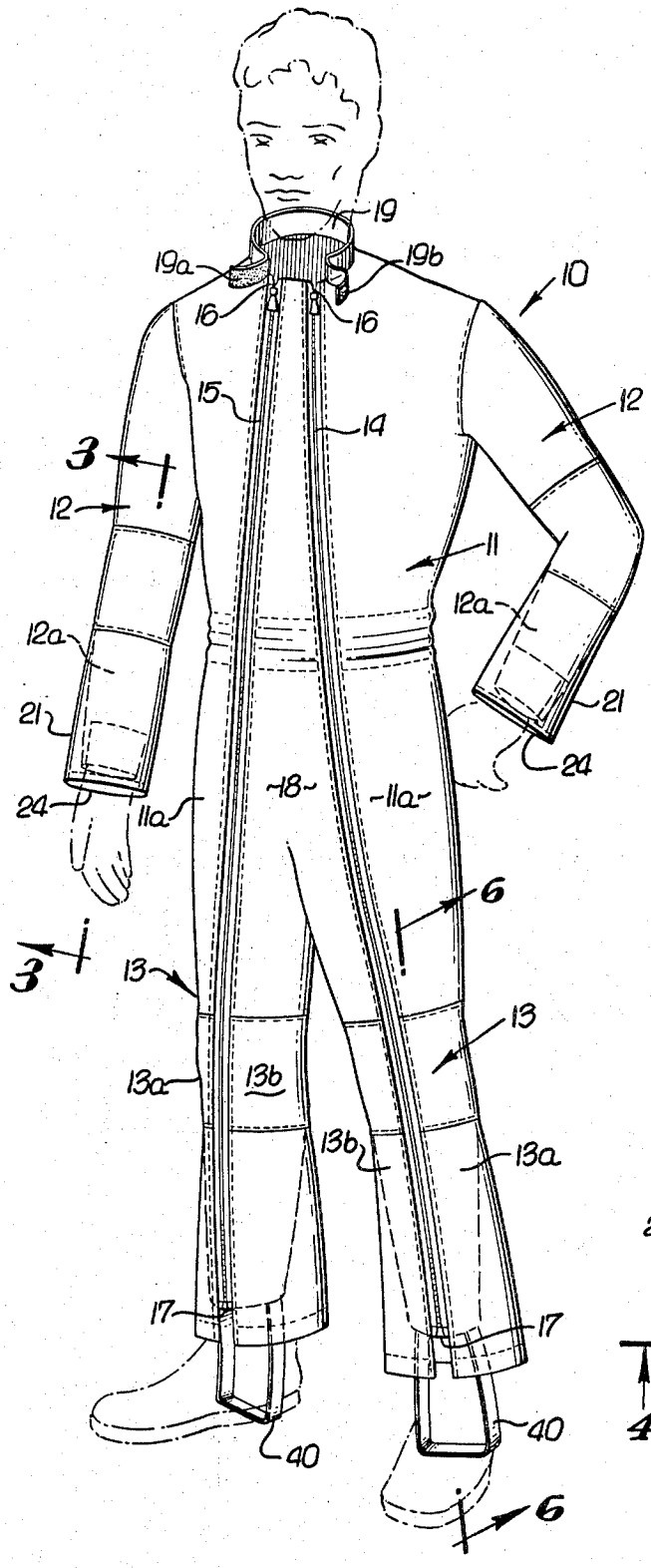

FIG. 4.

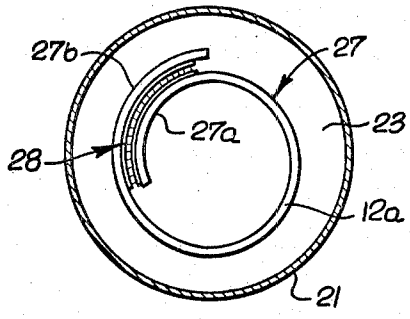

FIG. 3.

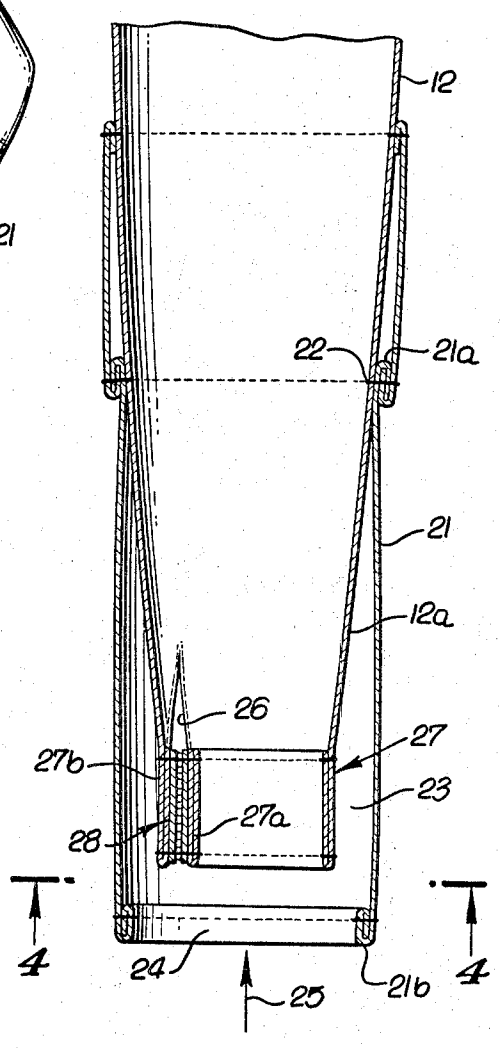

FIG. 7.

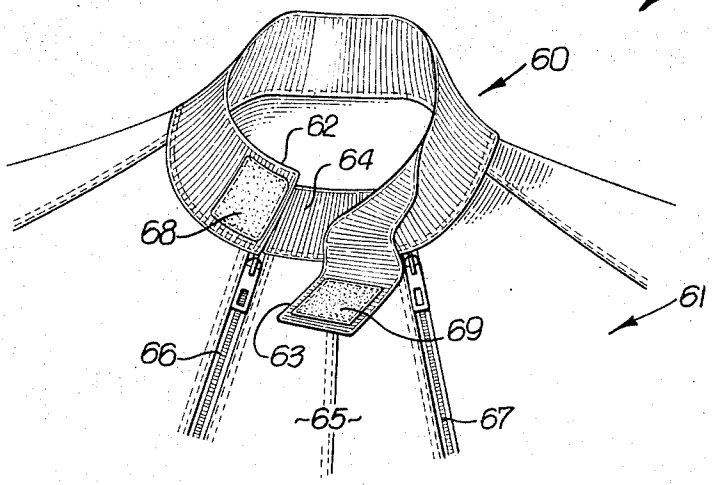

FIG. 8.

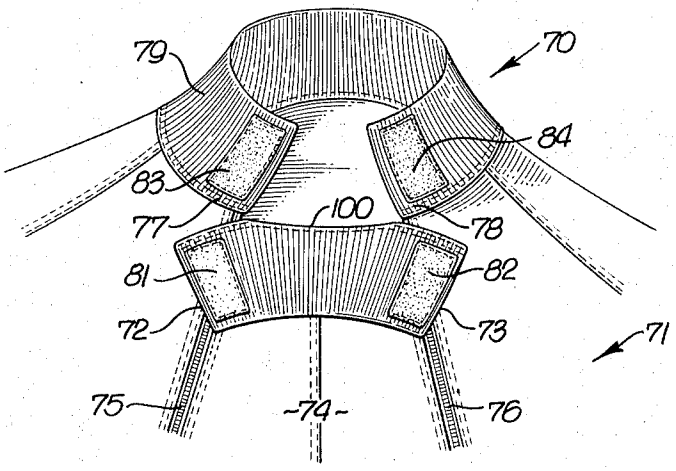

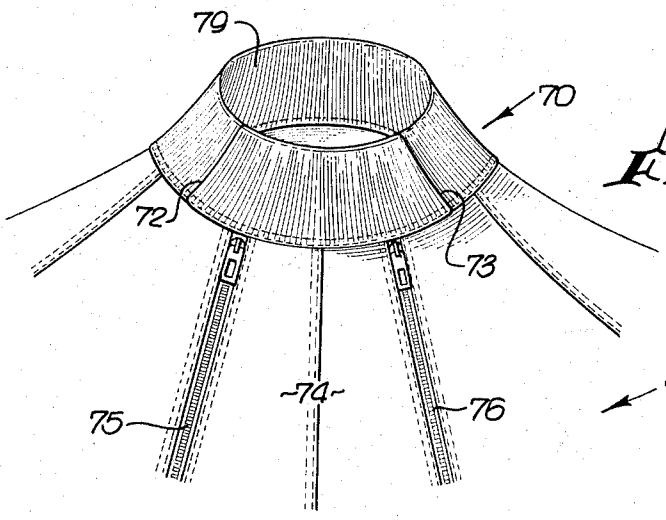

FIG. 9.

SPORT SUIT COLLAR

This application is a continuation-in-part of my prior application entitled "Jump Suit," Ser. No. 208,214, filed Dec. 15, 1971 and now U.S. Pat. No. 3,742,518, dated July 3, 1973.

BACKGROUND OF THE INVENTION

This invention relates generally to the construction of wind resistant clothing, and more particularly concerns the construction of suits as may be worn by parachutists, sky divers, motorcyclists, etc.

Sports such as sky diving and motorcycling involving extreme wind exposure have recently gained widespread popularity. Along with such activities have grown demands and needs for wind resistant clothing of sturdy construction, and capable of rapid, easy, assured donning and removal. Especially needed is a method and means of rapid closure of a split neck or collar where the suit body embodies dual zipper construction wherein a removable front panel is provided between the zippers and extends upwardly to the collar.

SUMMARY OF THE INVENTION

It is a major object of the invention to provide a suit, and especially a collar construction capable of meeting the above need. Basically, the invention is embodied in a suit construction that comprises; an upright suit body with arm sleeves and a neck portion; dual zipper connections at the body front and running generally downwardly from the neck, the body having a front panel defined between the zipper connections; the neck portion defined by overlapping flaps adjacent the top of the front insert panel; and there being interconnection layers on the flaps adapted to rapidly and releasably interconnect in response to pressure exertion pressing the layers together, for protecting the top of the front panel. As will appear, the body may consist of cotton duck, the neck portion may consist of stretchable fabric, and the interconnection layers may be defined by VELCRO, or the like.

Further, the first and second flaps as referred to may be integral with the front panel and have a down-folded position, the flaps when up-folded being connectible with third and fourth flaps integral with a split collar of stretchable fabric, to define an integrated closure involving the front flap and split collar, as will be seen; and all the flaps may alternatively be integral with the split collar.

These and other objects and advantages of the invention, as well as the details of an illustrative embodiment, will be more fully understood from the following description and drawings, in which:

DRAWING DESCRIPTION

FIG. 1 is an elevation illustrating use of a suit embodying the invention;

FIG. 2 is an elevation showing the manner in which the FIG. 1 suit is fitted on a parachutist;

FIG. 3 is an enlarged section taken on lines 3—3 of FIG. 2;

FIG. 4 is a horizontal section taken on lines 4—4 of FIG. 3; and

FIG. 5 is a vertical section showing details of a leg portion of the jump suit;

FIG. 6 is an enlarged section taken on lines 6—6 of FIG. 2;

FIG. 7 is a front view of a suit neck portion embodying the invention;

FIG. 8 is a view like FIG. 7, showing another form of the invention; and

FIG. 9 is a view of the FIG. 8 neck portion fully closed.

DETAILED DESCRIPTION

Referring first to FIG. 2, the illustrated jump suit 10 includes a body portion 11, arm sleeves 12 and leg sleeves 13. Like zipper connections 14 and 15 at the front of the suit extend as shown from the neck top at locations 16 to the leg portion bottoms at locations 17. As a result, the suit may be quickly applied to the wearer through manipulation of the zippers in relation to the front and side panels 18 and 11*a*, and in relation to the zipper connected sections 13*a* and 13*b* of the leg sleeves. When both zippers are completely disconnected, front panel 18 is disconnected from side panels 11*a*, and sections 13*a* are disconnected from sections 13*b*, it being clear that sections 13*b* remain integral with front panel 18. When the suit has been fitted on the jumper, the top neck portion 19 may be closely attached about the jumper's neck as by overlaying and connecting together flaps 19*a* and 19*b*, these for example being surfaced with hook and pile type fastering interconnection layers sold under the trademark VELCRO which attach when pressed together; accordingly, the top of the panel 18 is protected as is the jumper's neck, despite extreme wind forces.

The suit may consist for example of flexible fabric such as cotton duck, or other suitable material, and may be reinforced at the knees and elbows, as shown.

Merely as illustrative, an auxiliary sleeve is attached to at least one main sleeve (as for example an arm or leg sleeve as referred to), the auxiliary sleeve extending along the main sleeve toward an opening formed by the auxiliary sleeve to receive or trap air in a space defined between the main and auxiliary sleeves, thereby to expand the auxiliary sleeve and develop pressure tending to impede the parachutist's fall. In the example shown in FIGS. 3 and 4, the main sleeve 12 is sized to closely receive the diver's arm, and the auxiliary sleeve 21 is rearwardly connected at 22 to and about main sleeve (near the elbow) to extend forwardly along the forearm portion 12*a* of the main sleeve. In this regard, the auxiliary sleeve is shown as folded at 21*a* for attachment to the main sleeve, and is also folded at its lower terminal 21*b*, for reinforcement. When the wearer's forearm is directed generally downwardly (as in FIG. 1 for example) during a fall in the atmosphere, air trapped in annular space 23 between the sleeves is pressurized by the ram effect of the relative upward velocity air tending to enter the sleeve open end 24, in the direction of arrow 25. This in turn tends to expand the auxiliary sleeve and develop force exerted upwardly on the wearer's arm tending to impede his fall and permitting enhanced maneuvering control as by varied directional orientation of the wearer's arm relative to the direction of fall. Note that space 23 increases in cross section toward end 24.

Merely as illustrative, the inner sleeve forearm portion 12*a* may be slit at 26 adjacent wrist portion 27, the latter being closely releasably retained about the wear-

er's wrist by overlapping and interconnection of tabs **27***a* and **27***b*, the interconnection being illustrated at **28** and consisting for example of VELCRO facings, as previously referred to. Main and auxiliary sleeves as referred to may be provided in association with both arms of the diver, as seen in FIG. **2.**

In the example seen in FIGS. **5** and **6,** the main sleeve **13** is sized to closely receive the diver's leg, and the auxiliary sleeve **30** is rearwardly connected at **31** to and about the main sleeve (near the knee) to extend forwardly, with outward flare, along the lower leg portion **13***c* of the main sleeve. The auxiliary sleeve is shown as folded at **30***a* for attachment to the main sleeve, and is also folded at its lower terminal **30***b*, for reinforcement when the wearer's lower leg is directed generally downwardly (as in FIG. **1** for example) during a fall in the atmosphere, air trapped in space **32** between the sleeves is pressurized by the ram effect of the relative upward velocity air tending to enter the sleeve open end **33,** in the direction of arrow **34.** This in turn tends to expand the auxiliary sleeve and develop force exerted upwardly on the wearer's leg tending to impede his fall, and permitting enhanced control of maneuvering, as by raised directional orientation of the wearer's leg relative to the direction of fall. Space **32** also increases in area toward end **33.**

The main and auxiliary sleeves **13***c* and **30** may be attached together at a lengthwise extending location therealong, for added reinforcement tending to prevent relatively rearward displacement of the auxiliary sleeve relative to the main sleeve. For example, as seen in FIG. **5,** the auxiliary sleeve may be attached to the main sleeve at lengthwise locations **36** and **37** adjacent opposite interconnectible zipper sections **14***a* and **14***b*, and extending to the terminal portion **38** of the main sleeve. The latter is folded as shown and contains an elastic band **39** to retain the terminal portion **38** closely about the wearer's lower leg. A U-shaped strap **40** is attached to the terminal portion **38** and sized to extend under the jumper's boot, for retaining the main sleeve against creep upwardly along the leg.

In use, the jumper or sky diver may controllably maneuver his limbs individually and/or collectively from an upwardly extended position (for maximum dropping speed) to downwardly oriented or extended postion in order to achieve desired braking of his fall and selected roll of his body. If all four limbs are oriented downwardly as in FIG. **1,** near maximum braking effect is achieved. The jumper **50** is shown as carrying main and auxiliary parachutes **51** and **52.**

The sleeves **21** and **30** may consist of flexible fabric such as cotton duck, canvas, or the like.

In FIG. **7,** the neck portion **60** of suit **61** defines flaps **62** and **63** adapted to be brought into overlapping relation adjacent the top **64** of front panel **65.** The latter is defined between upright zipper connections **66** and **67** corresponding to those seen at **14** and **15** in FIG. **2.** The flaps are integral with the split collar defined by the neck portion **60** and consisting of stretchable fabric such as wool knitting, the suit body below the collar consisting of unstretchable wind resistant fabric such as cotton duck. Note that the top **64** of the panel **64** may also consist of knit material. VELCRO interconnection layers **68** and **69** in the flaps are brought together and pressurized to secure the flaps in protecting overlying relation to the top **64** of the removable panel **65,** whereby a wind resistant assembly is defined.

In FIGS. **8** and **9,** the neck portion **70** of suit **71** defines first and second flaps **72** and **73** attached to panel **74** between upright zippers **75** and **76,** the flaps projecting transversely oppositely. From down folded condition (along fold line **100**) as seen in FIG. **8,** the flaps are adapted to be folded upwardly and brought into overlapping relation with third and fourth flaps **77** and **78** respectively, integral with split collar **79** (defined by neck portion **70**). Flaps **77** and **78** and collar **79** consist of stretchable fabric such as wool knit, while the suit below the collar consists of wind resistant cotton duck. VELCRO interconnection layers **81** and **82** on flaps **72** and **73** are brought into contact with similar layers **83** and **84** on flaps **77** and **78,** and pressurized, to removably secure the flaps in protecting relation to the collar and panel **74,** whereby a highly wind resistant assembly is defined, and in relation to the two zippers **75** and **76.** In FIGS. **7–9** the tops of the two zippers, including the tabs by which the zippers are manipulated, are protected in flap interconnected condition, as described, and against inadvertent release.

I claim:

1. In a wind resistant suit construction, the combination comprising

a. an upright suit body with arm sleeves attached thereto, the body having a neck portion,

b. dual zipper connections at the front of said body and extending generally downwardly from the neck portion, the body having a front panel defined between said zipper connections,

c. the neck portion defining overlapping flaps adjacent the top extent of said panel, and

d. there being hook and pile type interconnection layers on the flaps adapted to releasably interconnect in response to pressure exertion pressing said layers together,

e. the upper terminals of the dual zippers remaining exposed directly below said neck portion when said interconnection layers are interconnected,

f. said neck portion defining a split collar and said flaps being defined by first and second flaps attached to said panel and projecting transversely oppositely, and third and fourth flaps being defined by said split collar attached to said body, said layers on the first and third flaps being pressure interconnected and said layers on the second and fourth flaps being interconnected.

2. The combination of claim **1** wherein the body below the neck portion consists of non-stretchable cotton duck, and the neck portion including said collar and flaps consists of stretchable fabric.

* * * * *