US 20050235398A1

(19) **United States**

(12) **Patent Application Publication** (10) **Pub. No.: US 2005/0235398 A1**

Yoo (43) **Pub. Date: Oct. 27, 2005**

(54) **SECURE AND CONCEALED POCKET SYSTEM**

(76) Inventor: **Jeasung Jay Yoo**, Lyndhurst, OH (US)

Correspondence Address:
THOMPSON HINE L.L.P.
2000 COURTHOUSE PLAZA , N.E.
10 WEST SECOND STREET
DAYTON, OH 45402 (US)

(21) Appl. No.: **11/054,114**

(22) Filed: **Feb. 9, 2005**

Related U.S. Application Data

(60) Provisional application No. 60/559,656, filed on Apr. 5, 2004.

Publication Classification

(51) **Int. Cl.**[7] **A41D 27/20**

(52) **U.S. Cl.** **2/247**

(57) **ABSTRACT**

A pocket system for a garment including a passageway extending across the garment, the passageway being defined by a first surface and a second surface, an inlet defining an opening through the first surface for providing access to the passageway, and at least one pocket extending from the passageway such that the pocket extends at an angle relative to a central axis of the passageway.

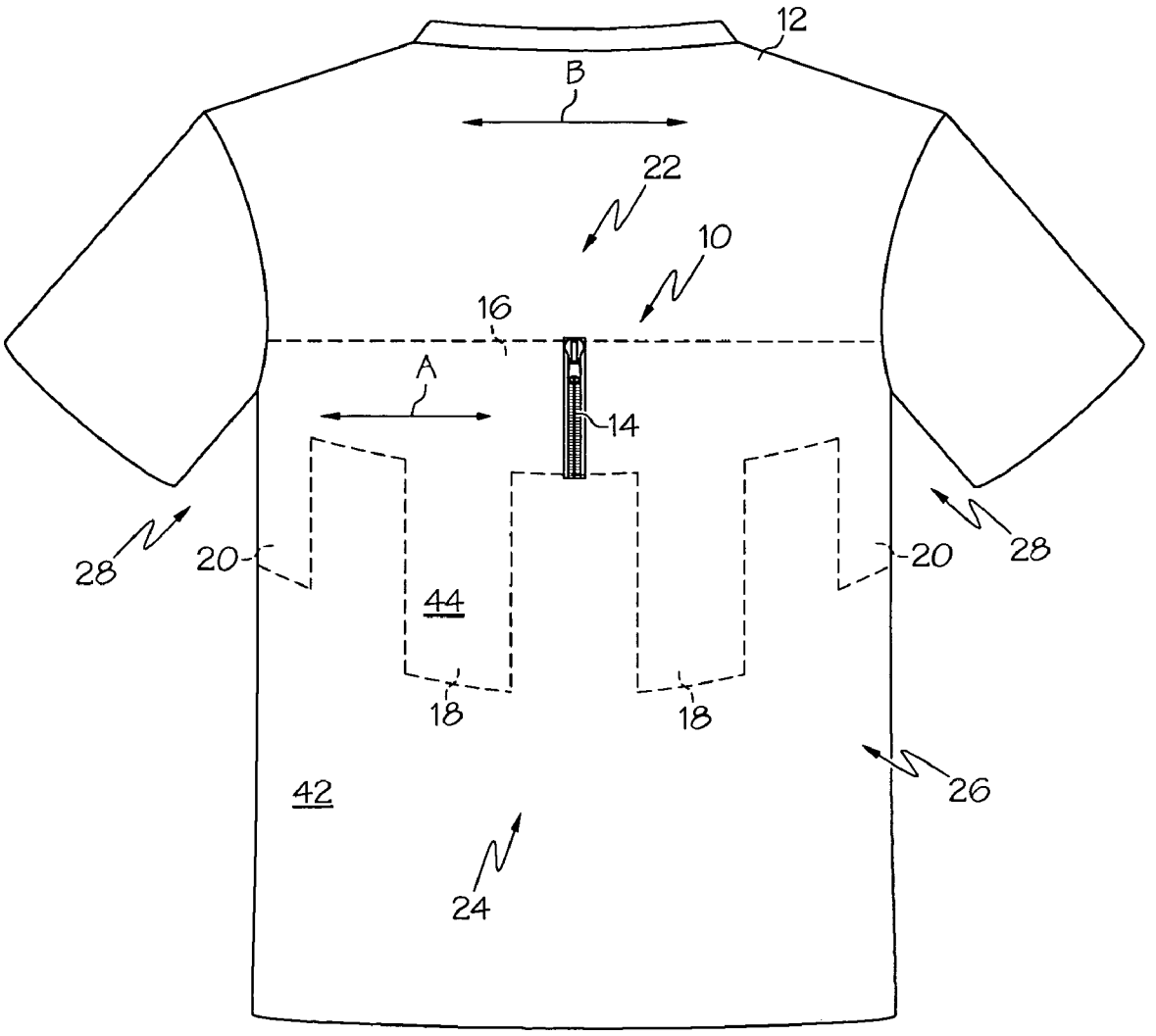

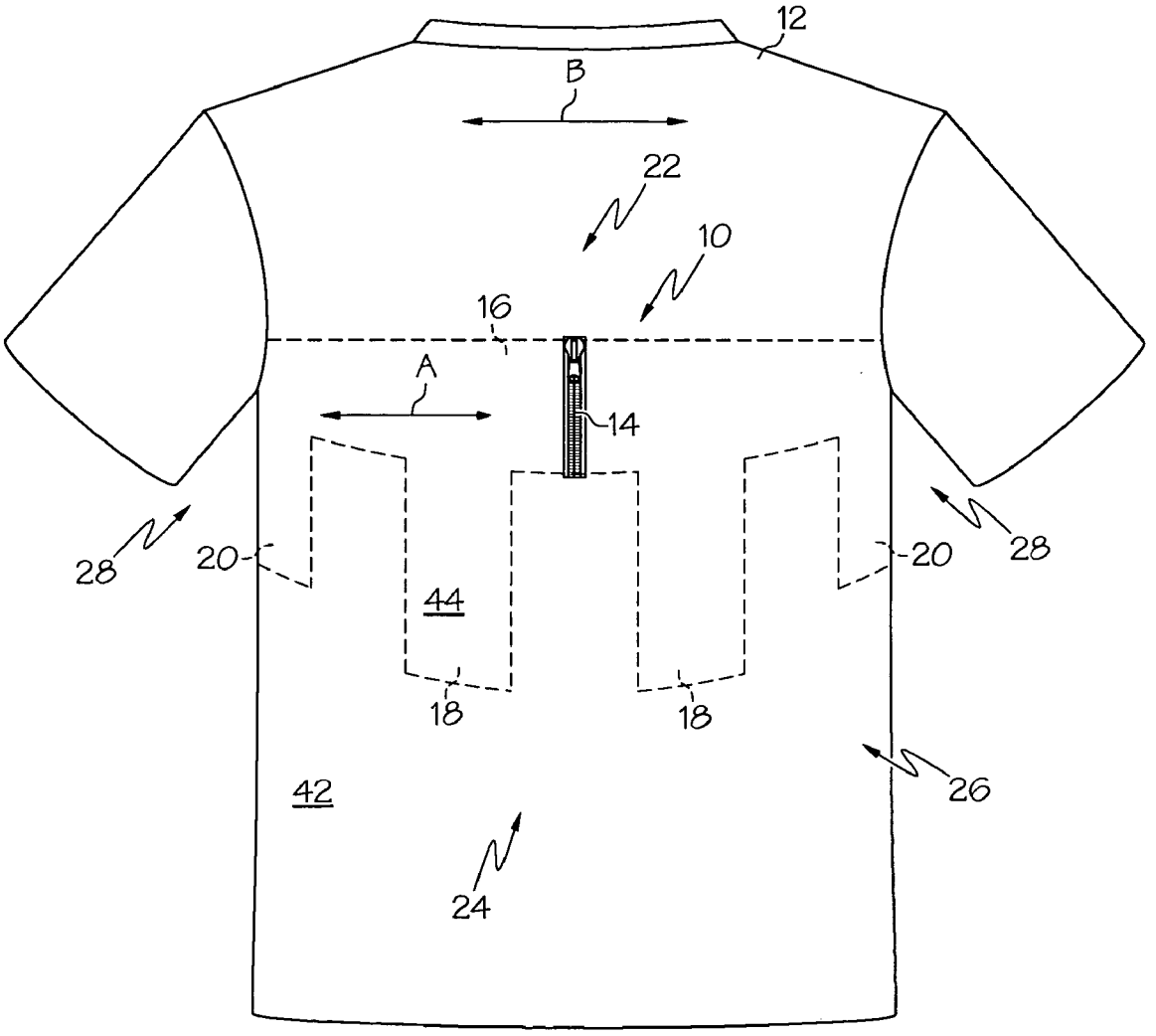

FIG. 1

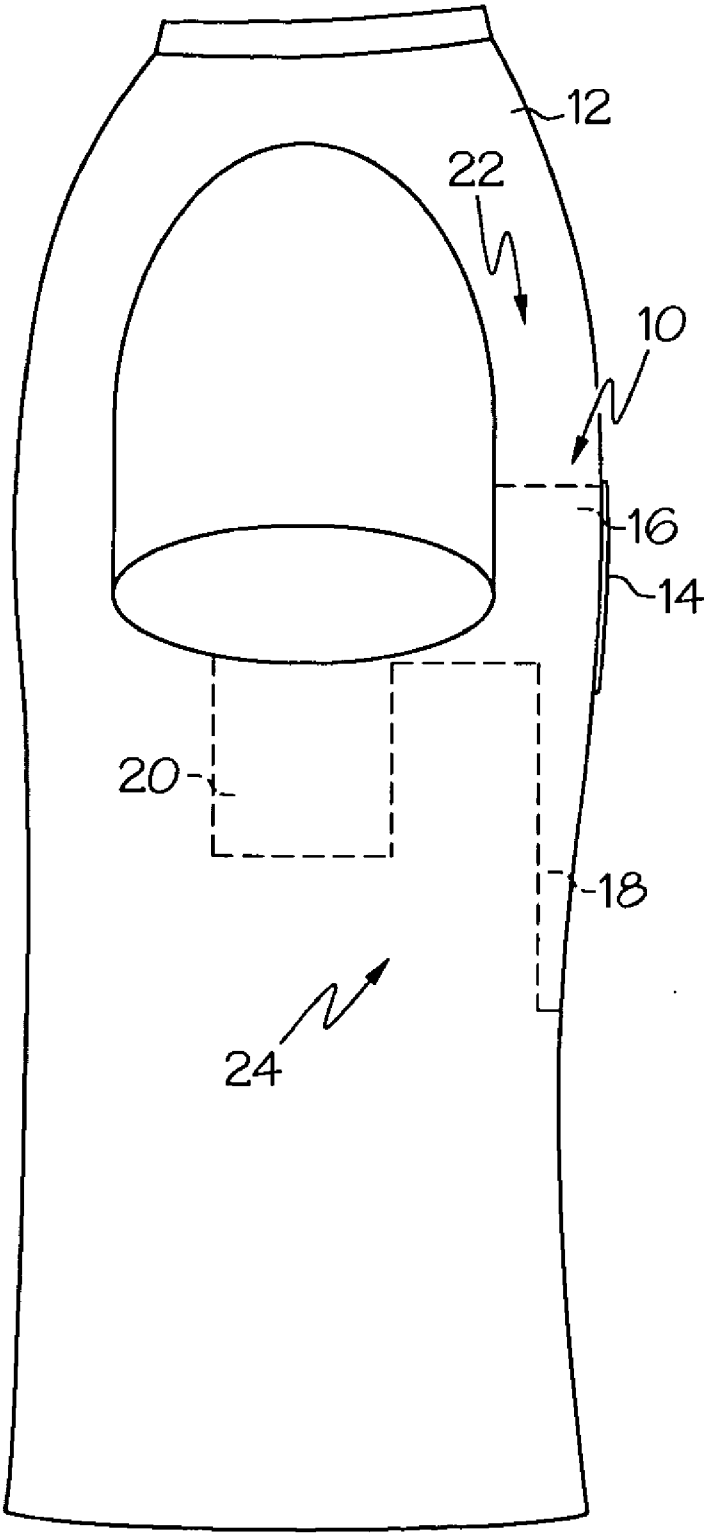

FIG. 2

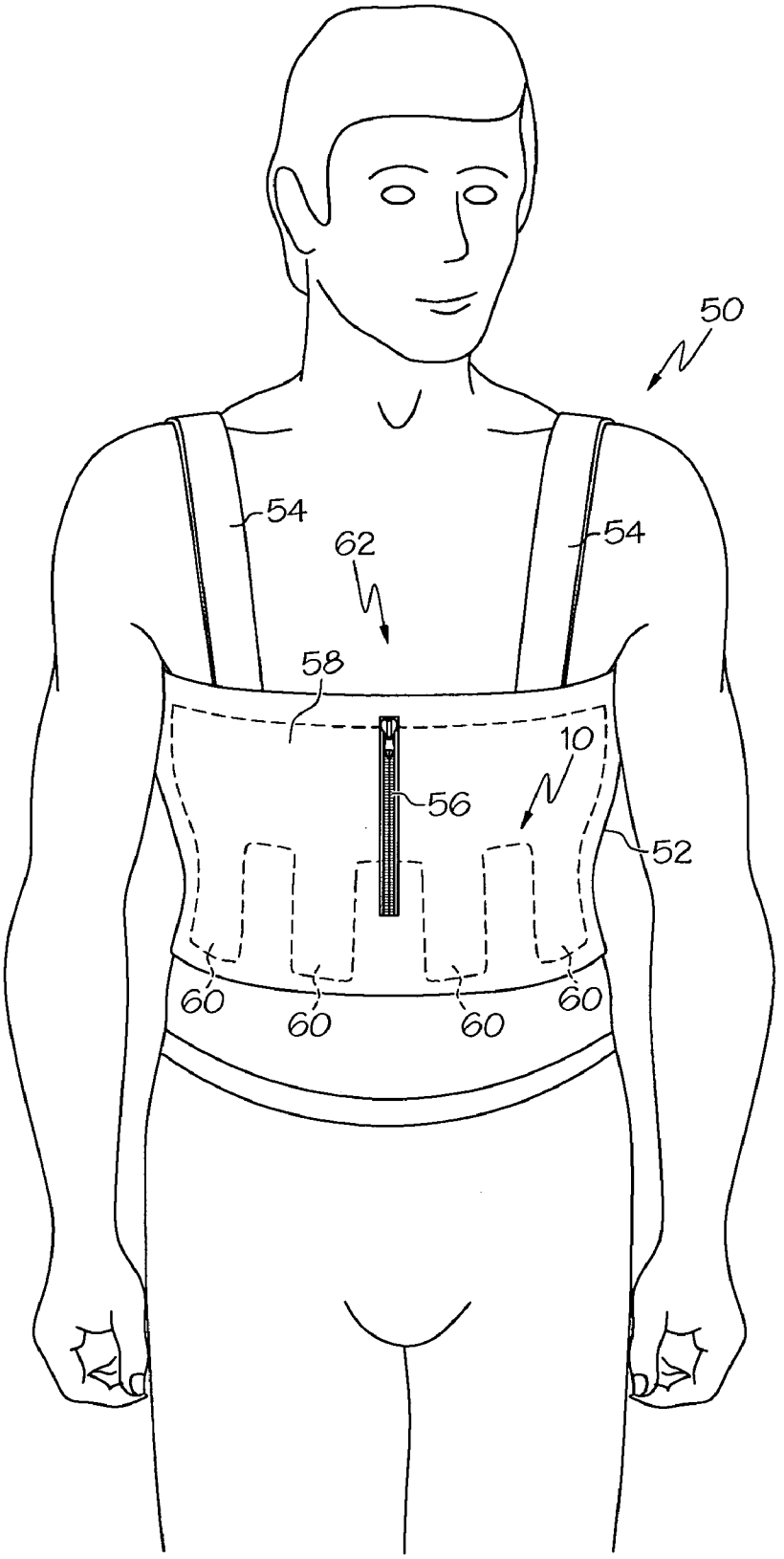

FIG. 3

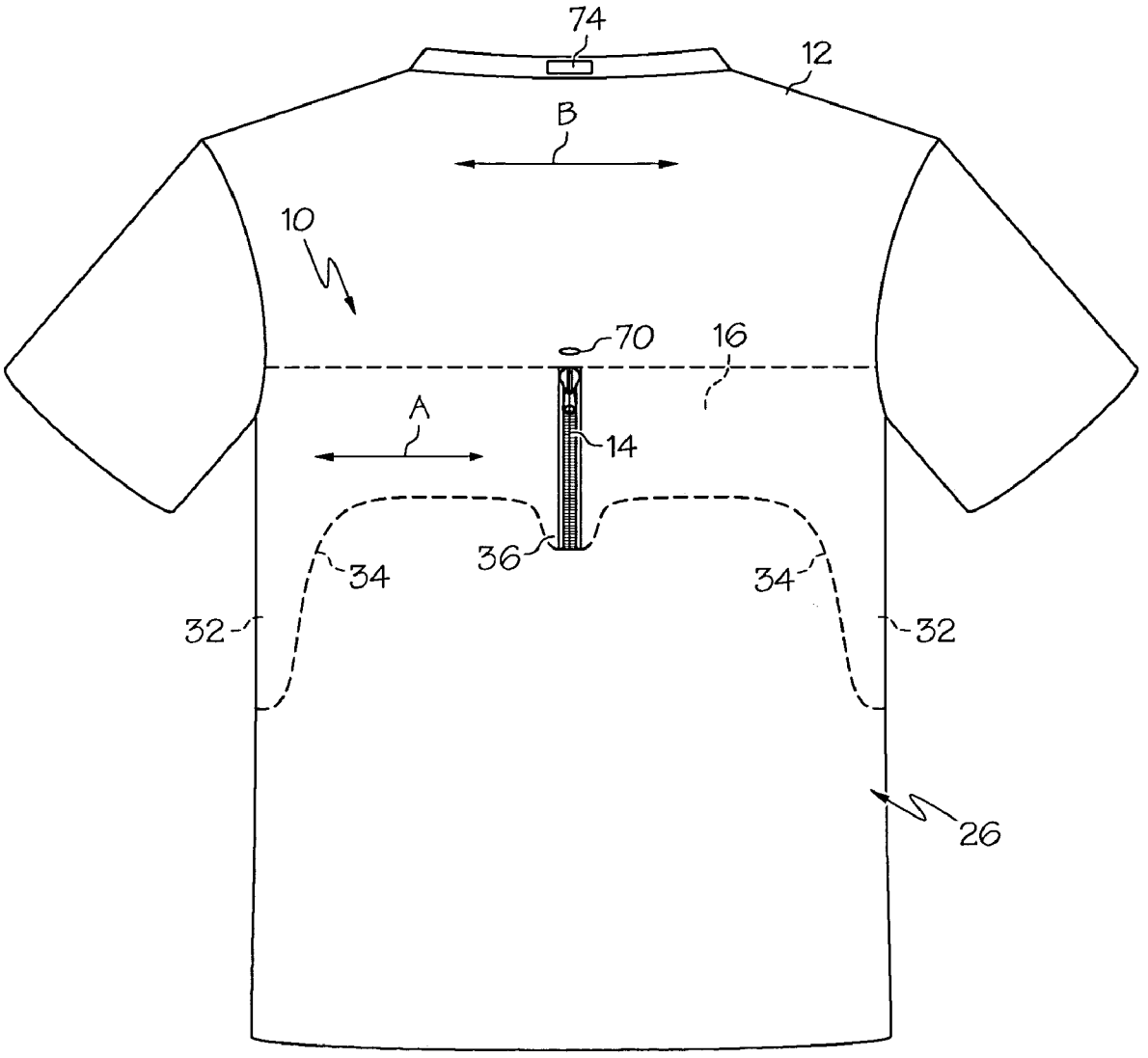

FIG. 4

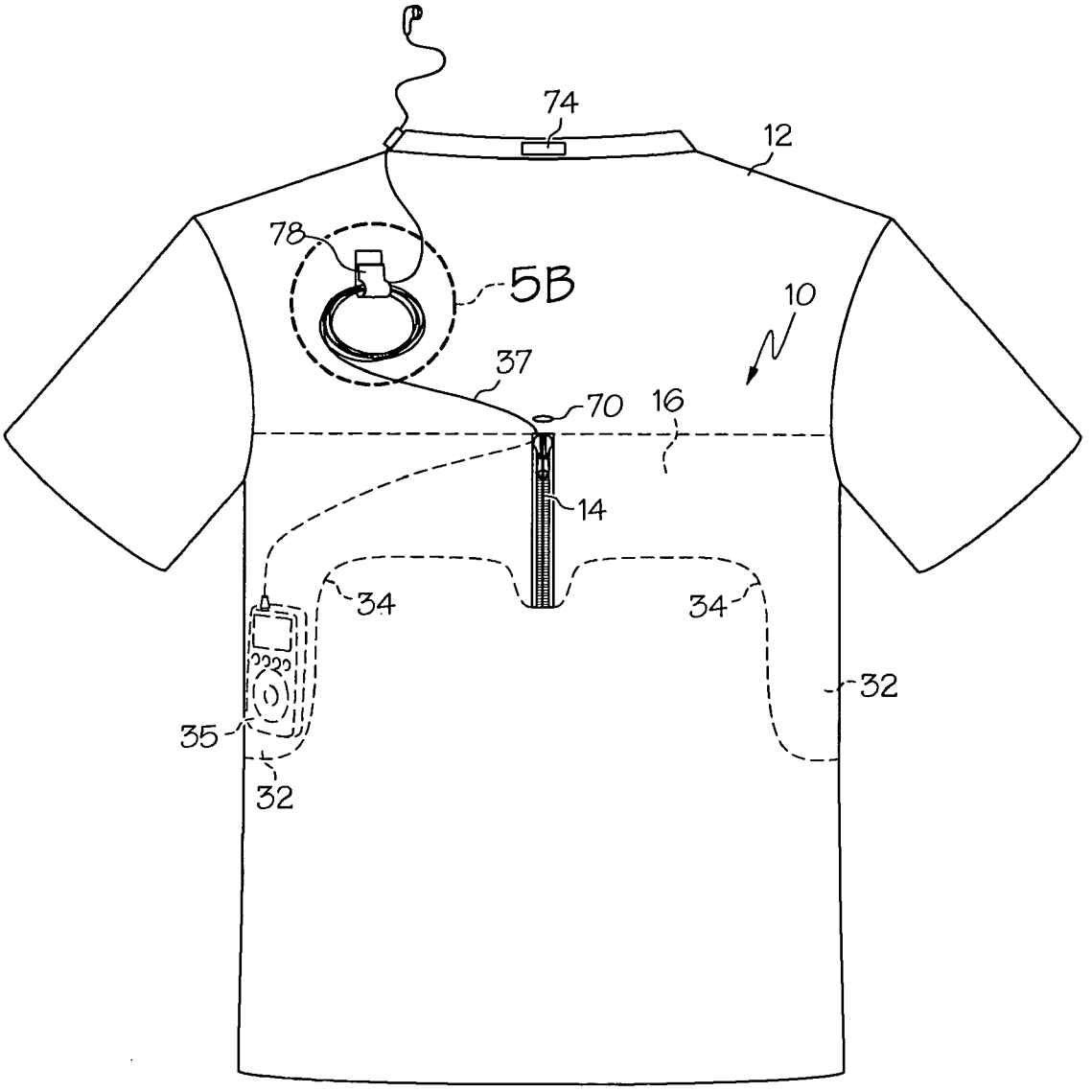

FIG. 5A

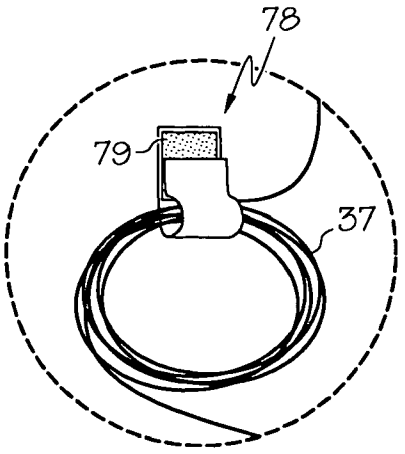

FIG. 5B

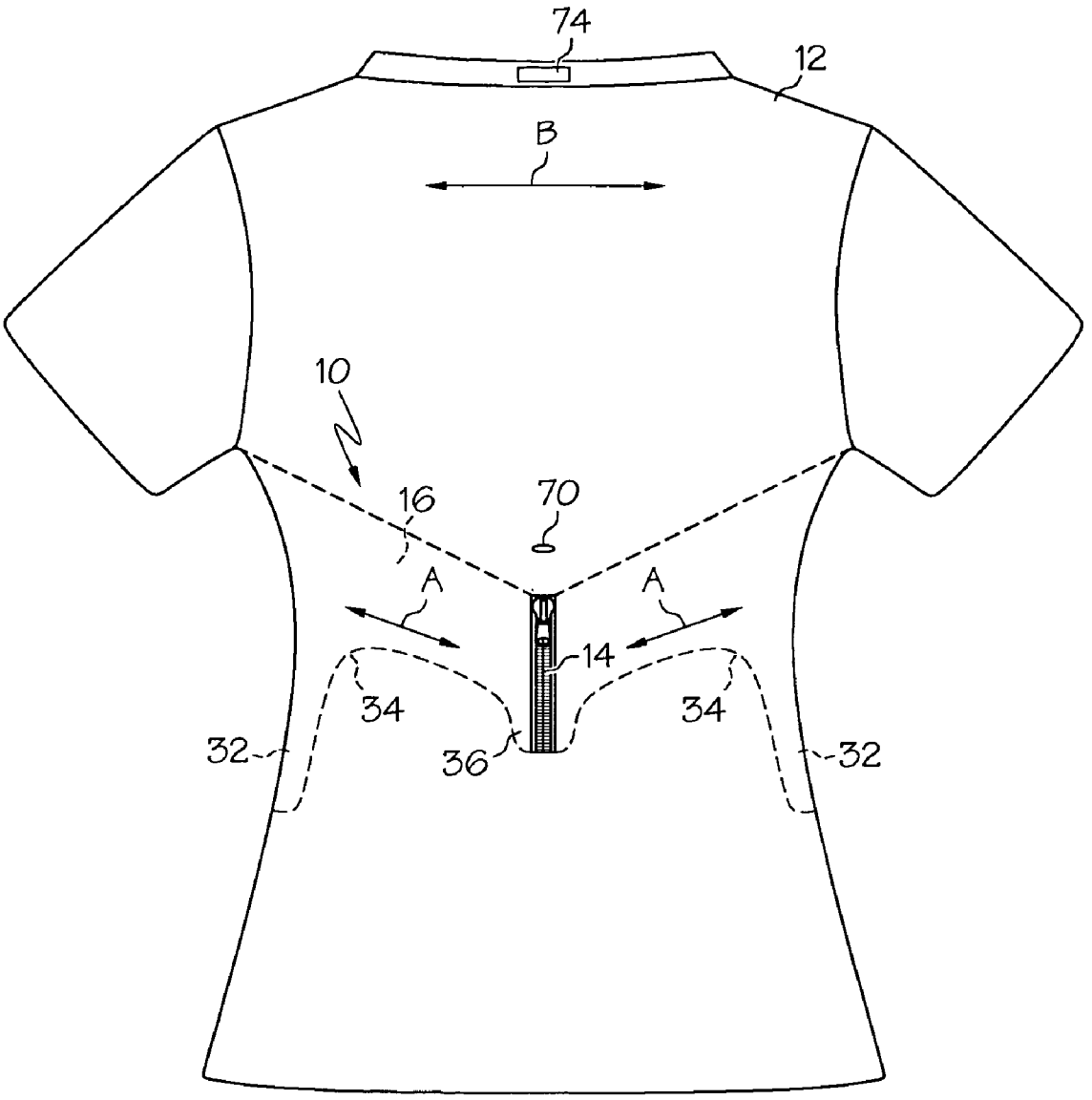

FIG. 6

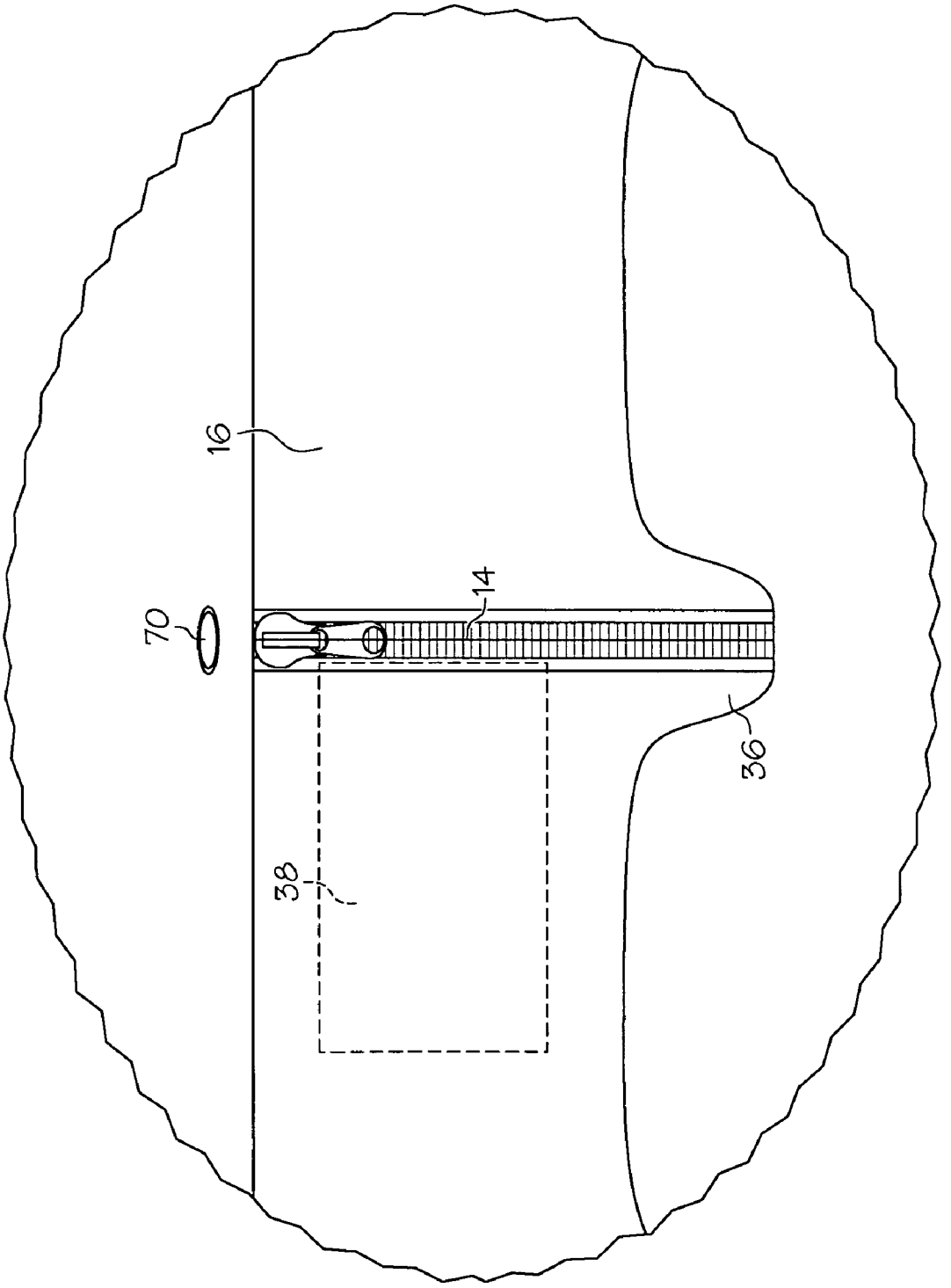

FIG. 7

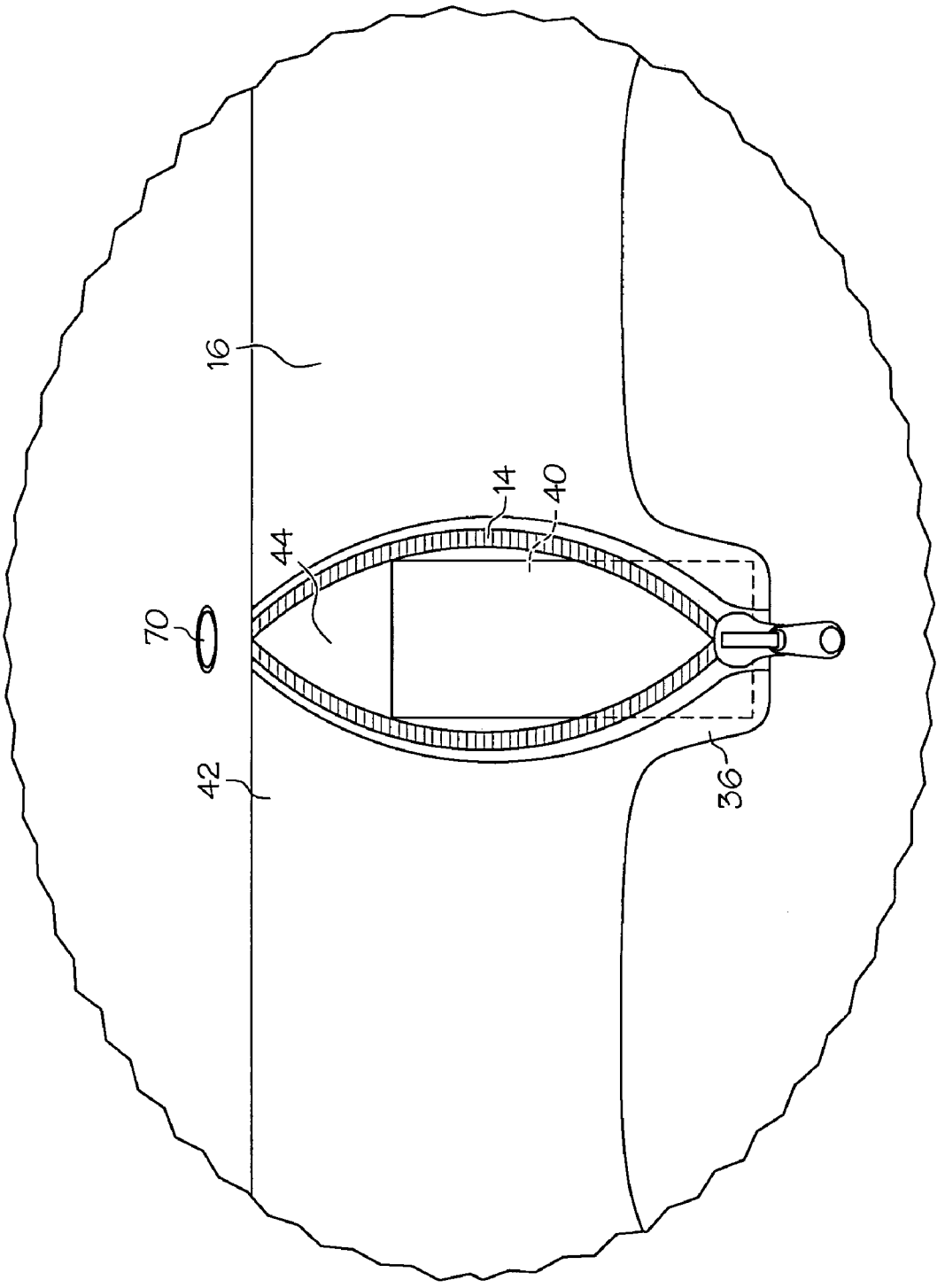

FIG. 8

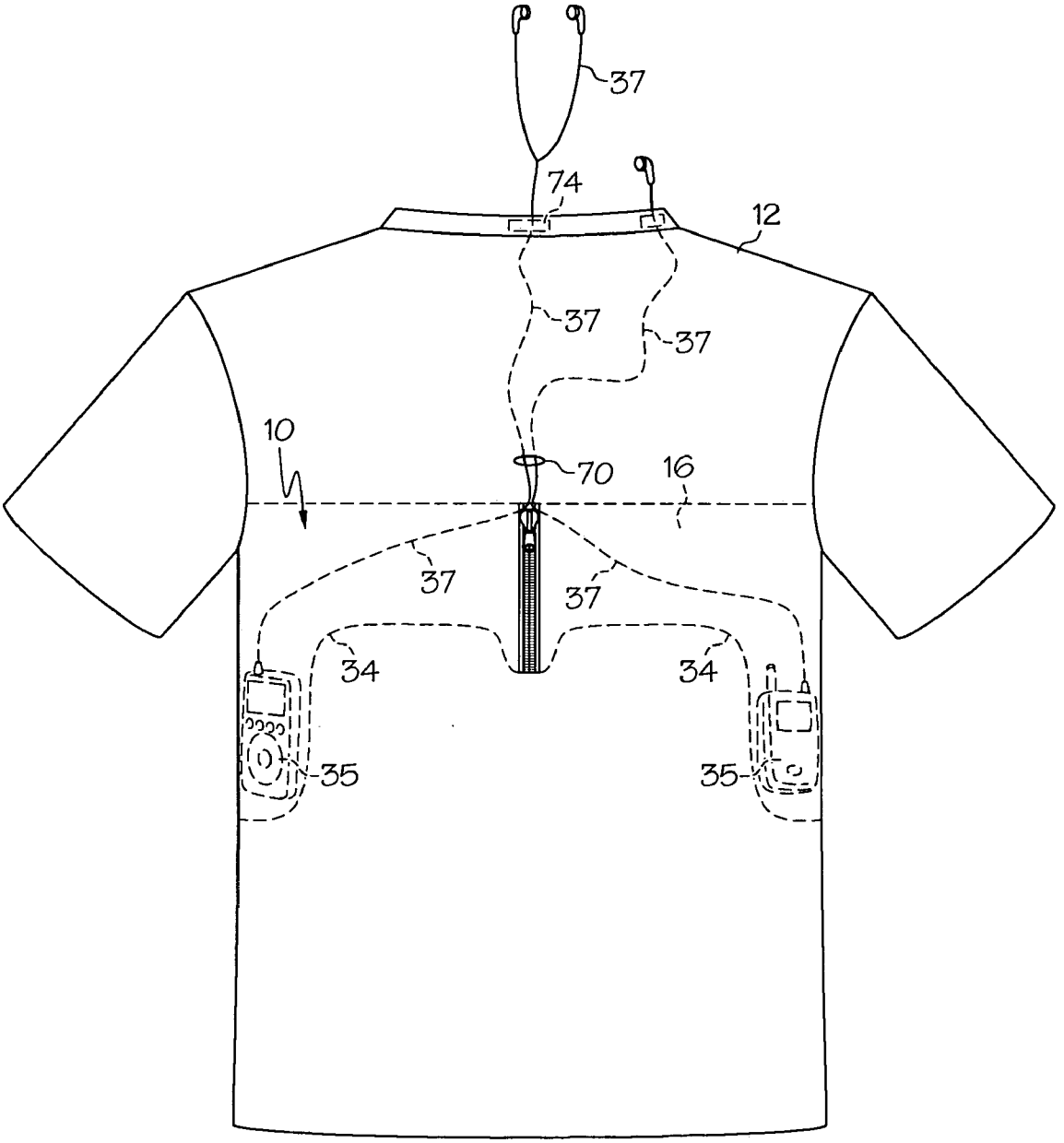

FIG. 9

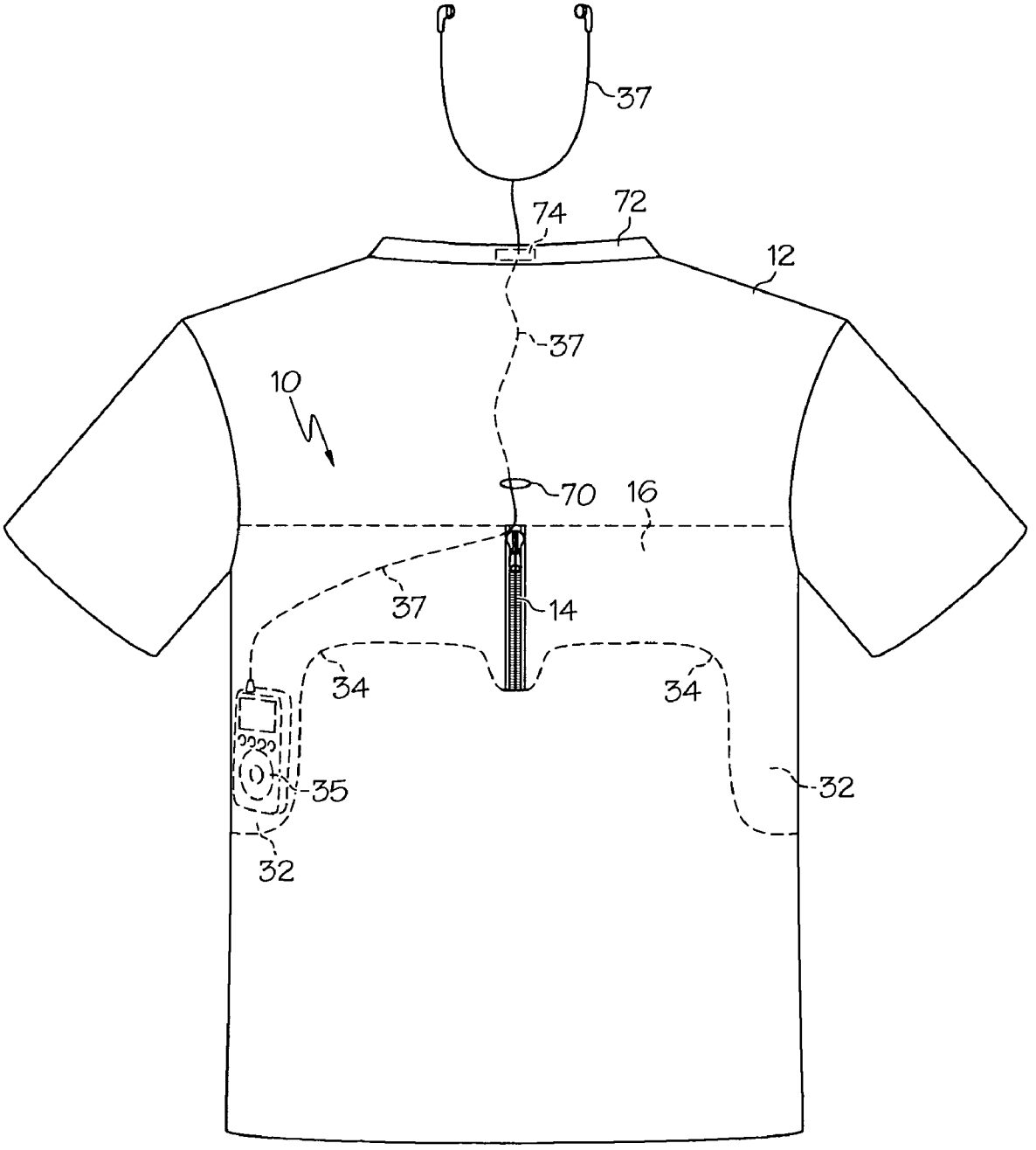

FIG. 10

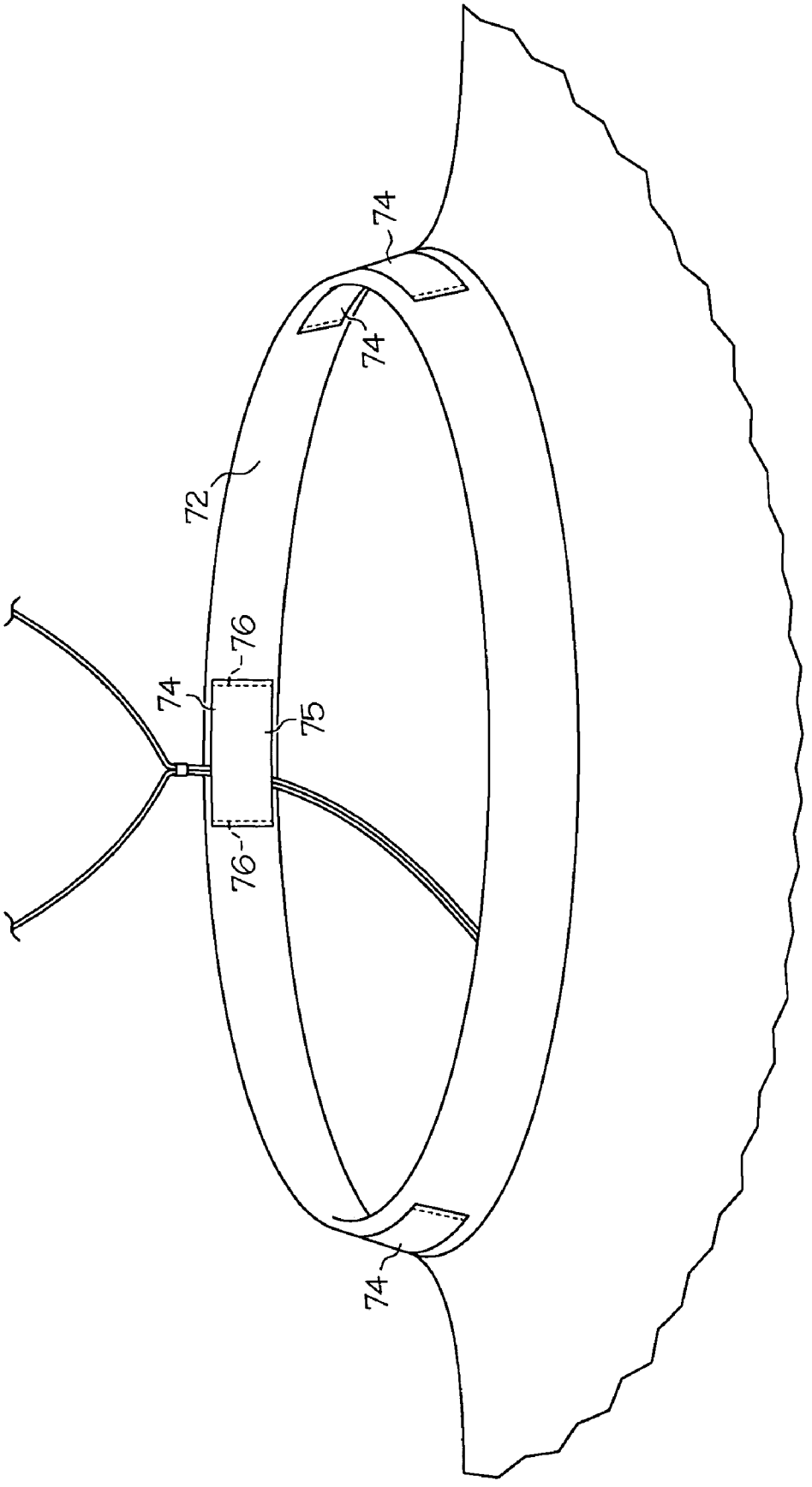

FIG. 11

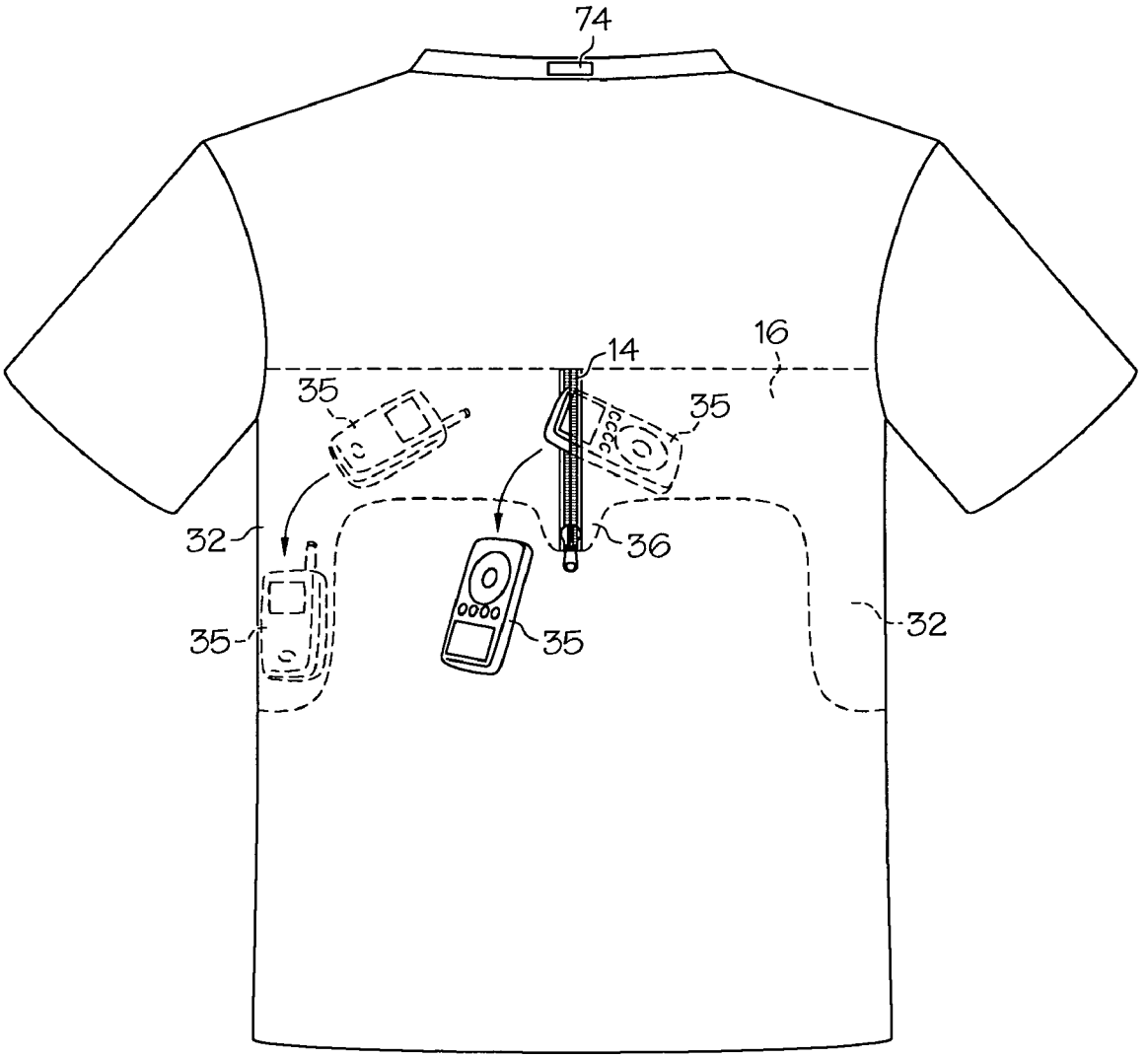

FIG. 12

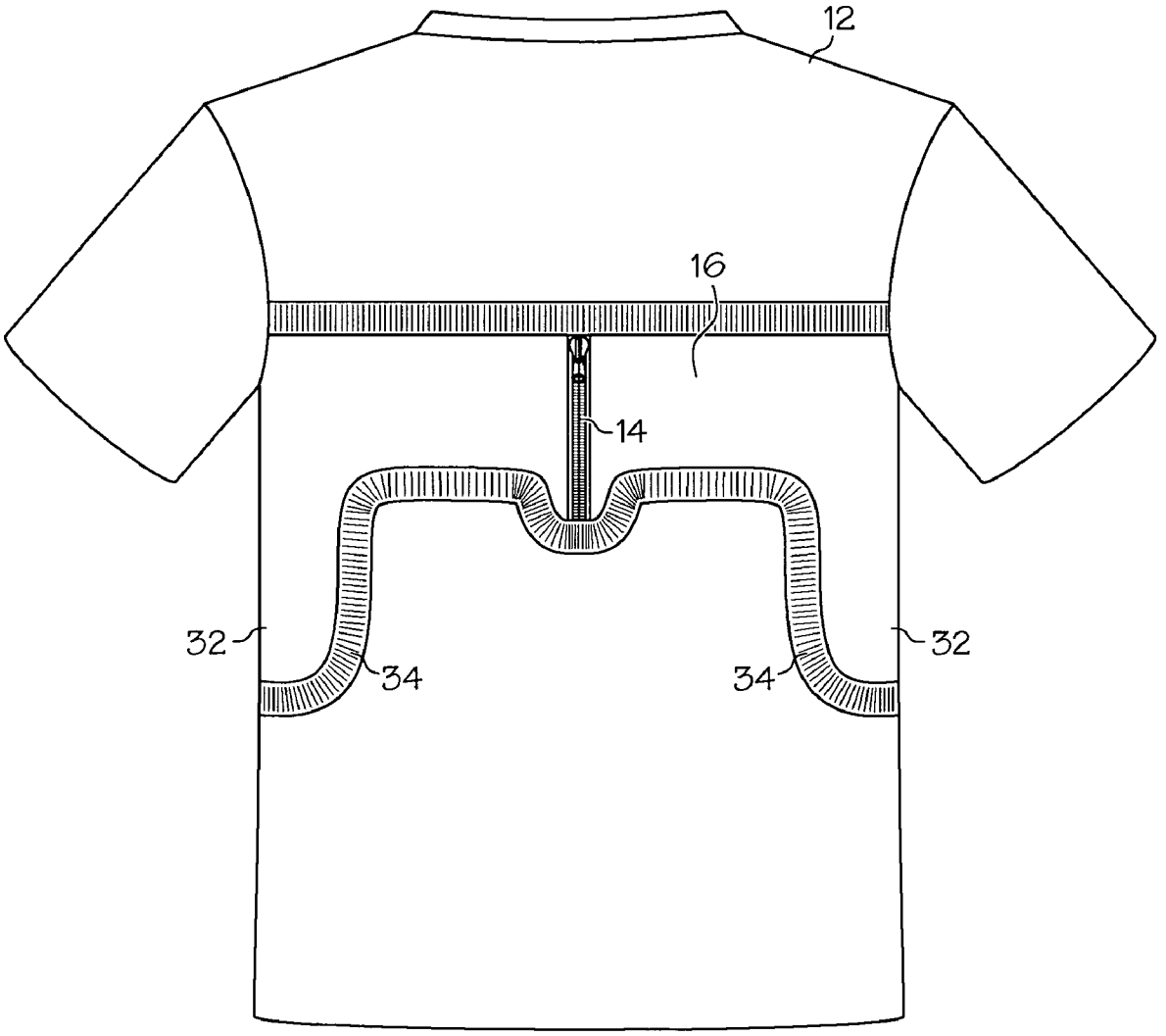

FIG. 13

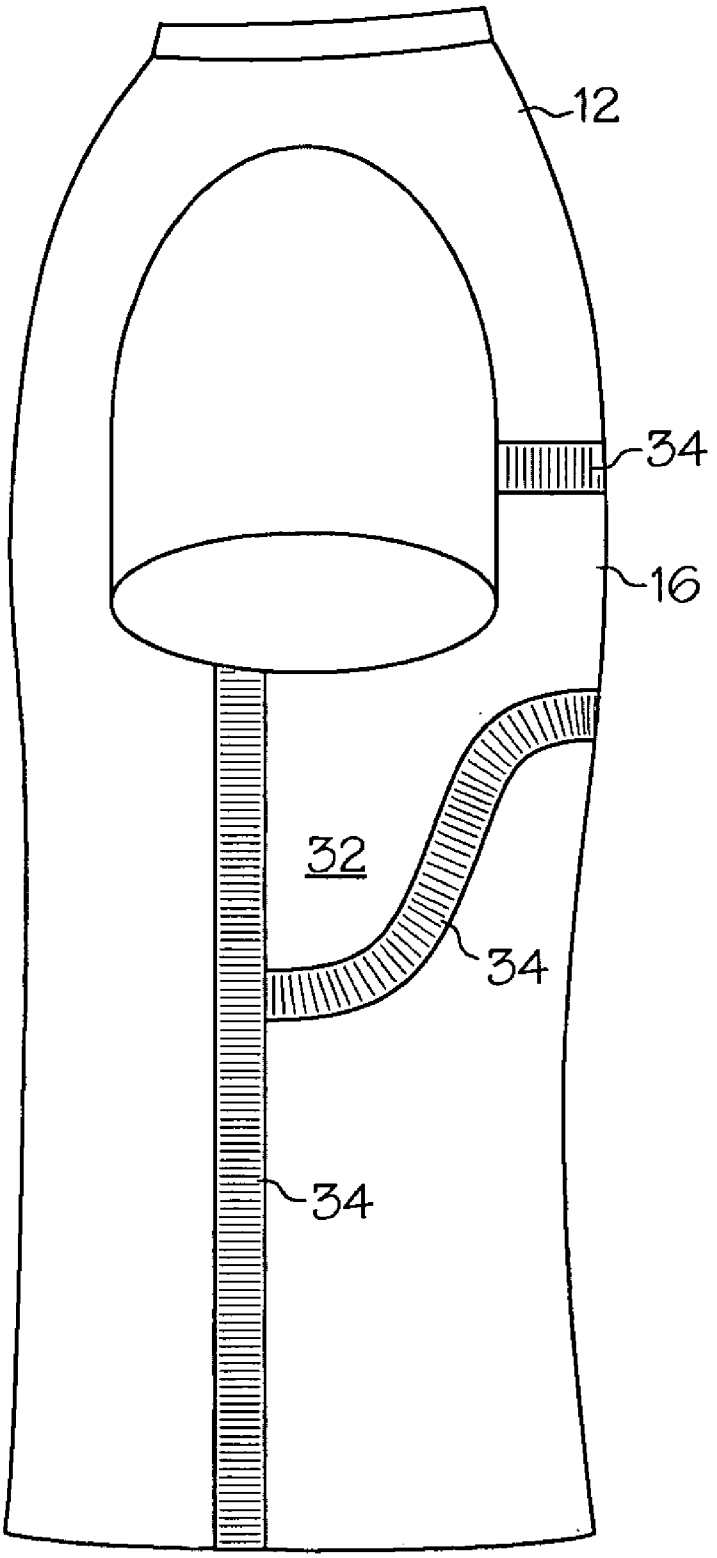

FIG. 14

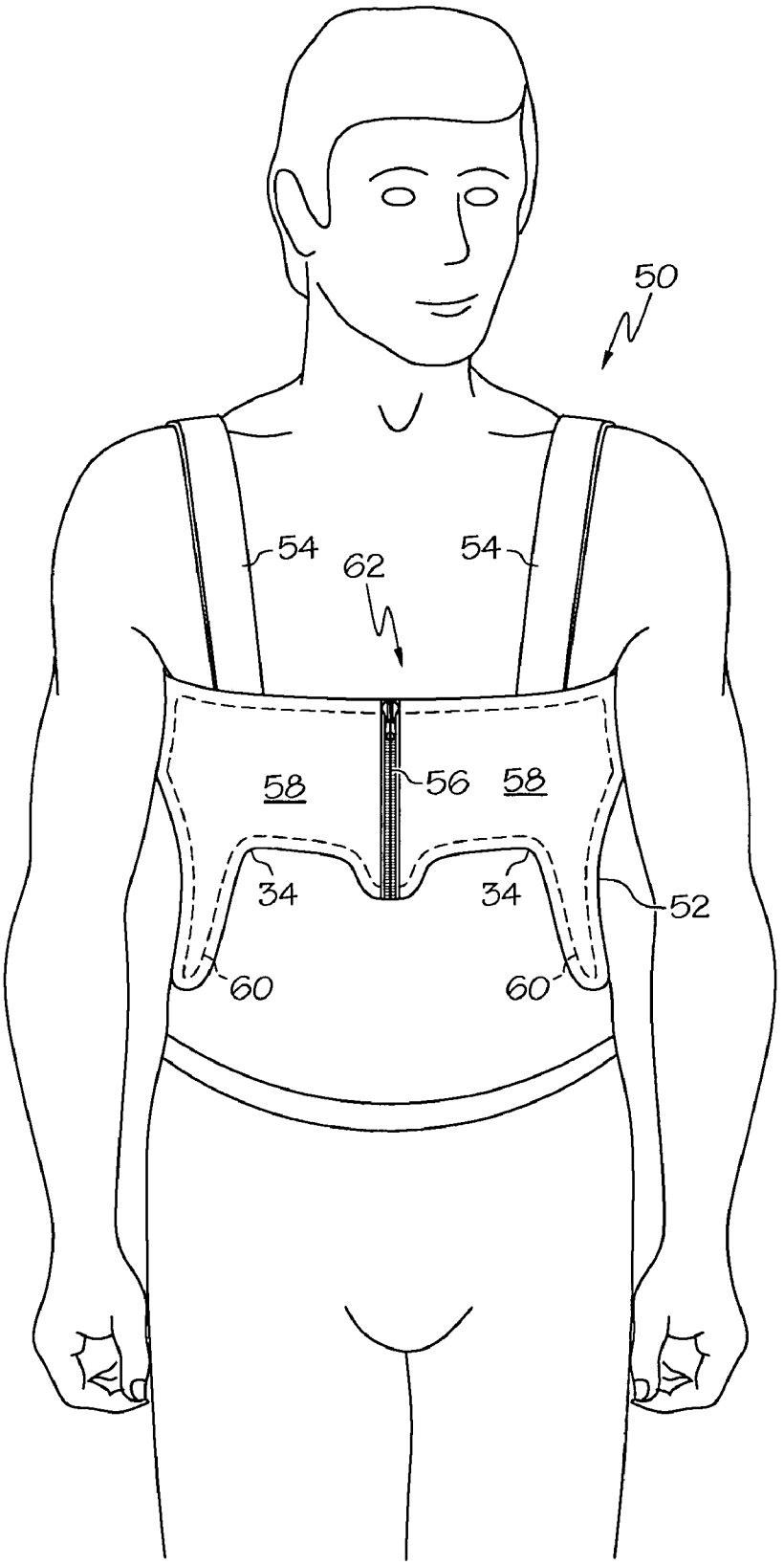

FIG. 15

SECURE AND CONCEALED POCKET SYSTEM

[0001] This application claims priority from U.S. Provisional Patent App. No. 60/559,656 filed on Apr. 5, 2004, the entire contents from which are incorporated herein by reference.

BACKGROUND

[0002] The present invention relates to pocket systems and, more particularly, to a concealed pocket system for securely and discretely storing items.

[0003] Pockets are a common component of articles such as bags, purses, holsters, belts and garments (i.e., shirts, undershirts, T-shirts, sweatshirts, skirts, pants, dresses and the like). Pockets are typically used to store items such as cell phones, MP-3 players, wallets, glasses, keys and the like. However, when these items are placed into a typical pocket, there is a possibility that the items may fall out of the pocket, thereby becoming lost. Furthermore, placing such items in typical pockets may negatively affect the aesthetic appeal of the article due to the stuffed and bulky appearance of a pocket filled with such items.

[0004] Accordingly, there is a need for a concealed pocket for securely store everyday items.

SUMMARY

[0005] One aspect of the present invention is a pocket system for a garment including a passageway extending across the garment, the passageway being defined by at least a first surface and a second surface, an inlet defining an opening through the first surface for providing access to the passageway, and at least one pocket extending from the passageway such that the pocket extends at an angle relative to a central axis of the passageway.

[0006] A second aspect of the present invention is a pocket system for a garment including a passageway extending generally horizontally across the garment and including a first end and a second end, wherein the passageway is defined by at least a first surface, an inlet defining an opening through the first surface for providing access to the passageway, the inlet being positioned generally centrally relative to the first end and the second end, a first pocket extending from the first end, and a second pocket extending from the second end, wherein the first and second pockets extends at an angle relative to the passageway.

[0007] A third aspect of the present invention is a pocket system for an article including a passageway extending across the article, the passageway is defined by at least a first surface and a second surface, an inlet defining an opening through the first surface for providing access to the passageway, and at least one pocket extending from the passageway such that the pocket extends at an angle relative to a central axis of the passageway

[0008] Other embodiments, objects and advantages of the present invention will be apparent from the following description, the accompanying drawings and the appended claims.

BRIEF DESCRIPTION OF THE DRAWINGS

[0009] **FIG. 1** is a front elevational view of a garment according to one aspect of the present invention;

[0010] **FIG. 2** is a side elevational view of the garment of **FIG. 1**;

[0011] **FIG. 3** is a front elevational view of garment according to a second aspect of the present invention;

[0012] **FIG. 4** is a front elevational view of a garment according to a third aspect of the present invention;

[0013] **FIG. 5A** is a front elevational view of the garment of **FIG. 4** storing an electronic device and including a wire anchor;

[0014] **FIG. 5B** is a perspective view of the wire anchor of **FIG. 5A**;

[0015] **FIG. 6** is a front elevational view of a garment according to a fourth aspect of the present invention;

[0016] **FIG. 7** is a front elevational view of a closure mechanism according to the present invention;

[0017] **FIG. 8** is a front elevational view of the closure mechanism of **FIG. 7** in the open position;

[0018] **FIG. 9** is a front elevational view of the garment of **FIG. 4** storing two electronic devices;

[0019] **FIG. 10** is a front elevational view of the garment of **FIG. 4** storing one electronic device;

[0020] **FIG. 11** is a front elevational view of a collar portion of the garment of **FIG. 10**;

[0021] **FIG. 12** is a front elevational view of the garment of **FIG. 4** having an electronic device exiting and entering the garment;

[0022] **FIG. 13** is a front elevation view of a garment according to a fifth aspect of the present invention;

[0023] **FIG. 14** is a side elevational view of the garment of **FIG. 13**; and

[0024] **FIG. 15** is a front elevational view of a garment according to a sixth aspect of the present invention.

DETAILED DESCRIPTION

[0025] As shown in **FIGS. 1 and 4**, the pocket system of the present invention, generally designated **10**, may be embodied on a garment **12** such as a T-shirt. However, the pocket system **10** may be used with various other types of garments **12** such as undershirts, dress shirts, blouses, coats, sweaters, pants, dresses, skirts, harnesses (see **FIGS. 3 and 15**) and the like, as well as various other types of articles such as bags, purses, holsters, belts, chairs, sofas, hats, computer cases, briefcases and the like.

[0026] In one aspect of the present invention, illustrated in **FIGS. 1-3**, the pocket system **10** includes an inlet **14**, a passageway **16**, two forward pockets **18** and two side pockets **20**. In a second aspect of the present invention, illustrated in **FIGS. 4-6**, the pocket system **10** includes an inlet **14**, a passageway **16** and two distal pockets **32**. Of course, one skilled in the art would recognize that any number of pockets could be employed with the present system **10** and the present invention is not limited to any number of pockets. From a practical standpoint, the number of pockets will typically be from about 1 to about 10, more particularly 2 to 4.

[0027] The inlet **14** is an opening through a surface of the garment **12** for providing access to the passageway **16**. According to one aspect, the inlet **14** is sized such that a user wearing the garment **12** may insert a hand into the inlet **14** to access the passageway **16** and pockets **18, 20, 32**. According to a second aspect, the inlet is sized such that a user may feel an item in one of the pockets **18, 20, 32** and manipulate the item, thereby causing the item to move towards the inlet **14** without the need for inserting a hand into the passageway **16**.

[0028] The inlet **14** may be vertically oriented (see **FIG. 1**) and positioned in the center of the garment **12**, between the pectoral or breast region **22** and the abdominal region **24** of the garment **12**. Alternatively, the inlet **14** may be aligned horizontally or in any other orientation and may be positioned in various locations on the garment **12** such that the inlet **14** provides access to the passageway **16** and pockets **18, 20, 32**.

[0029] As shown in **FIGS. 1, 4** and **8**, the passageway **16** and pockets **18, 20, 32** may be constructed from a first surface **42** and a second surface **44** shaped to form a passageway **16** and pockets **18, 20, 32**. The first surface **42** may be a portion of the garment and the second surface **44** may be a piece of material cut and/or shaped to be attached to the first surface **42**.

[0030] The passageway **16** and pockets **18, 20, 32** may be formed from a material such as cloth, spandex, wool, cotton, polyester or any other like material, which may be cut or shaped to create the passageway **16** and the pockets **18, 20**. In one aspect, the passageway **16** and pockets **18, 20, 32** may be formed from anti-radiation material such that energy/radiation that emanates from electronic devices (e.g., cell phones) does not harm the user. In a second aspect, the passageway **16** and pockets **18, 20, 32** may be formed from a waterproof material (e.g., nylon with Goretex or Nextex treatment) to prevent or reduce moisture and/or condensation in the pockets **18, 20, 32**. As shown in **FIGS. 13 and 14**, due to the typically rigid nature of waterproof material, an elastic material **34** may be positioned between the garment **12** and the passageway **16** and pockets **18, 20, 32** to allow for stretching. The elastic material **34** should have elastic properties similar to the garment material, if not better, thereby allowing the garment **12** to stretch and expand around the pocket system **10** without causing the stitching to break away from the passageway **16** and pockets **18, 20, 32**.

[0031] In one aspect of the present invention, the pockets **18, 20, 32** are formed from an elastic material such that, when items are placed into the pockets **18, 20**, they are closely grasped and received by the elastic material. The material (i.e., second surface **44**) may be aligned with the inlet **14** and attached to surface **42** (see dashed lines in **FIGS. 1 and 4**) by stitches, adhesives such as glue, staples, rivets or any other like attachment method.

[0032] The passageway **16** extends across the garment **12** to provide access to the pockets **18, 20, 32**. In one aspect of the present invention, shown in **FIG. 1**, a central axis A of the passageway **16** extends generally parallel with the horizontal axis B of the garment **12**. In a second aspect of the present invention, shown in **FIG. 6**, the central axis A of the passageway **16** is oriented at various angles relative to the horizontal axis B of the garment **12** to simplify the insertion and extraction of items to and from the pockets **18, 20, 32** and to conform to various body types (e.g., **FIG. 6** illustrates a V-shaped passageway **16** that conforms to the female anatomy).

[0033] The pockets **18, 20, 32** may be positioned on a front portion **26** of the garment **12** and may extend generally perpendicularly from the passageway **16**, towards the abdominal region **24** of the garment **12**. Alternatively, the pockets **18, 20, 32** may extend at an angle of about 45 to about 90 degrees relative to the passageway **16**.

[0034] As shown in **FIG. 12**, the pockets **32** may include a curved or radius edge **34**. The curved edge **34** allows items **35** placed into the passageway **16** to quickly and easily fall into a pocket **32** via the assistance of gravity. In another aspect, the inlet **14** may be oversized (i.e., larger than the passageway **16** and may include a downward sloping portion **36**. The downward sloping portion **36** allows an item **35** manipulated from a pocket **32** to easily exit the inlet **14** and fall into a user's hand with the assistance of gravity.

[0035] Each pocket **18, 20, 32** may be sized to closely receive items **35** such as cell phones, MP-3 players, wallets, glasses, keys and the like, such that once these items are placed into the pockets **18, 20, 32**, they are secured into a specific pocket and do not shift to other pockets **18, 20, 32**. Each pocket **18, 20, 32** may have a unique shape, corresponding to a specific item, or alternatively, two or more of the pockets **18, 20, 32** may be uniform in size and shape. The pockets **18, 20, 32** may be designed and shaped to closely receive specific items, thereby concealing them such that they are not readily visible through the surface of the garment **12**. Furthermore, the pockets **18, 20, 32** are positioned in a manner such that should a user wearing the garment **12** bend over, the items in the pockets **18, 20, 32** may shift into the passageway **16**, but then as the user stands upright, the items may fall back into their respective pockets **18, 20, 32**. However, should an item placed into a specific pocket **18, 20, 32** accidentally be moved from the desired pocket **18, 20, 32** to another pocket **18, 20, 32**, the user may feel the item through the garment **12** and shift it back into the desired pocket **18, 20, 32**.

[0036] As shown in **FIGS. 7 and 8**, the passageway **16** may include various imbedded pockets **38, 40**. The imbedded pockets **38, 40** may be vertically aligned (see **FIG. 8**) or horizontally aligned (see **FIG. 7**) and may be attached to the inner surface **44** or outer surface **42** of the passageway **16**. The imbedded pockets **38, 40** may be sized and shaped to closely receive various items such a credit cards, keys and the like.

[0037] The inlet **14** may remain open at all times. Alternatively, closure mechanisms such as hook and loop fasteners, buttons, zippers, magnets or other like closing mechanisms may be utilized to close the inlet **14** when not in use, while allowing the user to easily open the inlet **14** when desired. The closing mechanism may prevent items that have shifted out of the pockets **18, 20, 32**, due to erratic movement of the user, from accidentally exiting the inlet **14** and falling out of the pocket system **10**.

[0038] An alternative embodiment **50** of the pocket system **10** of the present invention is shown in **FIGS. 3 and 15** and includes a belt **52** having shoulder straps or suspender **54**, an inlet **56**, a passageway **58** and pockets **60**. Pockets **60** may include a curved or radius edge **34** (see **FIG. 15**). The pocket

system **10** may also be embodied in various other articles, such as bags, purses, holsters, hats and the like, in a similar manner.

[**0039**] The belt **52** may be worn around a torso **62** of a user and supported by the shoulder straps **54**, as shown in **FIGS. 3 and 15**. The inlet **56** may be a single opening through a surface of the belt **52**, as discussed with respect to inlet **14**, above. The passageway **58** and pockets **60** may be similar to the passageway **16** and pockets **18**, **20**, **32** described above, and may attach to an inside surface of the belt **52** in a similar manner.

[**0040**] As shown through **FIGS. 4-10**, the garment **12** may include an opening **70** positioned above the inlet **14** for receiving various wires. The opening **70** provides access through the garment **12** such that items may be inserted through the opening **70** and positioned between the garment **12** and the user's body. For example, as shown in **FIGS. 9 and 10**, an electronic device **35** (e.g., an MP-3 player) may be positioned in a pocket **32**. A wire **37** extending from the device **35** may exit through the inlet **14** and enter the opening **70** such that only a portion of the wire **37** is visible from the exterior of the garment **12**. The wire **37** may then exit the garment **12** through the collar **72** of the garment **12**.

[**0041**] As shown in **FIGS. 9-11**, the collar **72** may include a number of anchor tabs **74** spaced about the collar **72** for securing the wire **37** to the collar **72**. The tabs **74** may be positioned on the inside and/or outside of the collar **72**. Each anchor tab **74** may include a longitudinal strip of material **75** secured to the collar **72** with stitches **76**. Alternatively, each tab **74** may be detachable or partially detachable (i.e., attached with hook-and-loop fasteners).

[**0042**] As shown in **FIGS. 5A and 5B**, wire anchors **78** may be provided on the garment **12**. The anchors **78** may be attached to an inner or outer surface of the garment **12** and adapted to secure various wires **37** to the garment **12**. As shown in **FIG. 5B**, the anchors **78** may include a strip of material having look-and-loop fastening material **79** attached thereto. Anchors **78** are not limited to the structure depicted in **FIG. 58**, but rather it should be understood that any structure capable of securing a wire **37** to the garment **12** may serve as an anchor **78**.

[**0043**] Although the invention is shown and described with respect to certain embodiments, it is obvious that equivalents and modifications will occur to those skilled in the art upon reading and understanding the specification. The present invention includes all such equivalents and modifications and is limited only by the scope of the claims.

What is claimed is:

1. A pocket system for a garment comprising:

a passageway extending across said garment, said passageway being defined by at least a first surface and a second surface;

an inlet defining an opening through said first surface for providing access to said passageway; and

at least one pocket extending from said passageway such that said pocket extends at an angle relative to a central axis of said passageway.

2. The pocket system of claim 1 wherein said garment is a T-shirt, undershirt, dress shirt, blouse, coat, sweater, pant, dress, skirt or harness.

3. The pocket system of claim 1 wherein said passageway includes a first end and a second and a first pocket extends from said first end and a second pocket extends from said second end.

4. The pocket system of claim 3 wherein said passageway extends generally horizontally across said garment.

5. The pocket system of claim 4 wherein said first and second pockets extend substantially perpendicularly relative to said central axis.

6. The pocket system of claim 1 wherein said inlet is larger than said passageway.

7. The pocket system of claim 1 wherein said passageway and said pocket are formed from an anti-radiation material.

8. The pocket system of claim 1 wherein said passageway and said pocket are formed from a waterproof material.

9. The pocket system of claim 1 wherein said passageway is generally V-shaped.

10. The pocket system of claim 1 wherein said pocket includes a curved edge.

11. The pocket system of claim 1 wherein said pocket is sized to closely receive an electronic device.

12. The pocket system of claim 1 further comprising at least one imbedded pocket connected to said first or second surface.

13. The pocket system of claim 1 wherein said inlet includes a closure mechanism.

14. The pocket system of claim 1 further comprising an opening through said garment, said opening being positioned generally above said inlet.

15. The pocket system of claim 1 further comprising at least one anchor tab attached to said garment.

16. The pocket system of claim 1 further comprising a wire anchor attached to said garment.

17. A pocket system for a garment comprising:

a passageway extending generally horizontally across said garment and including a first end and a second end, wherein said passageway is defined by at least a first surface;

an inlet defining an opening through said first surface for providing access to said passageway, said inlet being positioned generally centrally relative to said first end and said second end;

a first pocket extending from said first end; and

a second pocket extending from said second end,

wherein said first and second pockets extend at an angle relative to said passageway.

18. The pocket system of claim 17 wherein said garment is a T-shirt, undershirt, dress shirt, blouse, coat, sweater, pant, dress, skirt or harness.

19. The pocket system of claim 17 wherein said angle is about 45 to about 90 degrees.

20. The pocket system of claim 17 wherein said inlet is larger than said passageway.

21. The pocket system of claim 17 wherein said passageway and said pockets are formed from an anti-radiation material.

22. The pocket system of claim 17 wherein said passageway and said pockets are formed from a waterproof material.

23. The pocket system of claim 17 wherein each of said pockets includes a curved edge.

24. The pocket system of claim 17 further comprising at least one imbedded pocket positioned within said passageway.

25. A pocket system for an article comprising:

a passageway extending across said article, said passageway being defined by at least a first surface and a second surface;

an inlet defining an opening through said first surface for providing access to said passageway; and

at least one pocket extending from said passageway such that said pocket extends at an angle relative to a central axis of said passageway.

26. The pocket system of claim 25 wherein said article is a bag, purse, holster, belt, chair, sofa, hat, computer case or briefcase.

* * * * *