May 30, 1950 E. TRANSUE 2,509,460

ELECTRIC WATER HEATER FOR STOCK TANKS

Filed Nov. 3, 1948

FIG. 1.

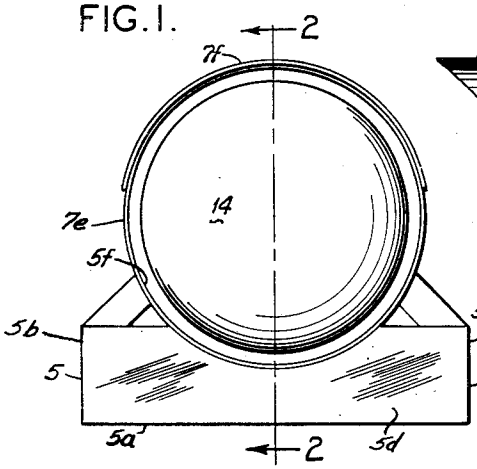

FIG. 2.

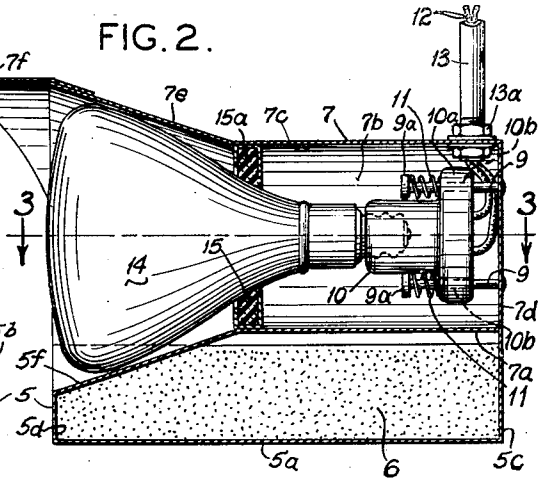

FIG. 3.

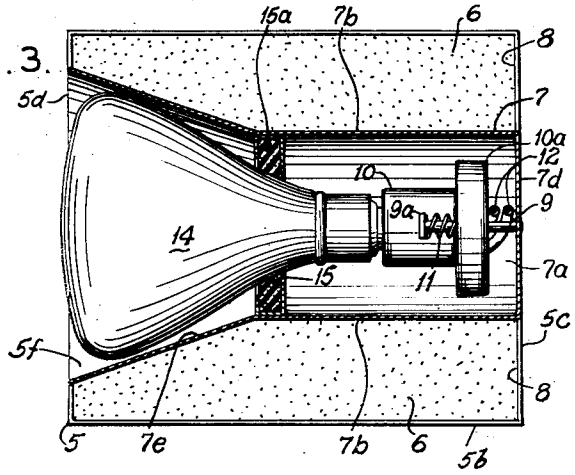

FIG. 4.

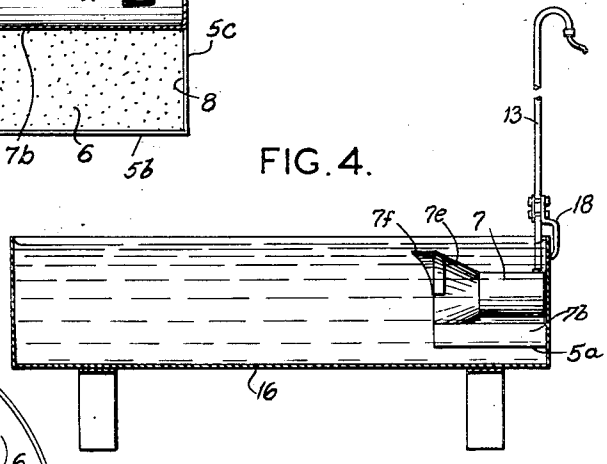

FIG. 5.

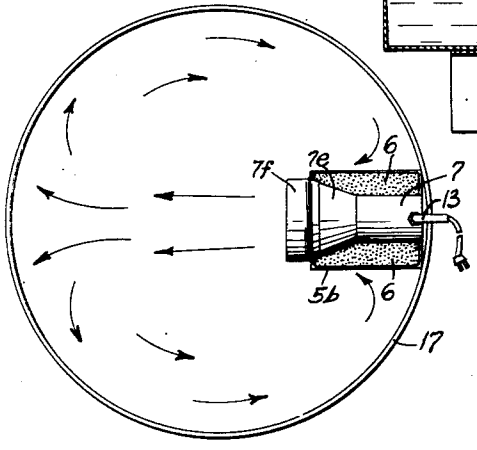

INVENTOR;
ELMER TRANSUE
BY A. E. Fisher
ATTORNEY.

Patented May 30, 1950 2,509,460

UNITED STATES PATENT OFFICE

2,509,460

ELECTRIC WATER HEATER FOR STOCK TANKS

Elmer Transue, Plattsburg, Mo.

Application November 3, 1948, Serial No. 58,073

3 Claims. (Cl. 219—38)

1

This invention relates to electric water heaters for stock tanks, and the principal object of the invention is to provide an electrical heating unit which may be readily mounted within any conventional form of water tank, as used upon farms and ranches for warming the water therein to prevent same from freezing in cold weather, and also for rendering the water more palatable to the stock.

Another object of the invention is to provide a water tank heating unit of the kind referred to, the same comprising a basal ballast box that is open at the upper side for the insertion of ballast such stone or gravel for holding the unit to the bottom of a tank of water, a water-tight case or housing mounted upon the basal ballast box, for containing and supporting the working elements of the unit, an electric lamp socket movably mounted upon guide pins extended longitudinally inward from the outer end of the said housing, means such as springs for resiliently urging the said socket rearwardly or outwardly upon the guide pins, water-proofed electric leads extended into the socket, a flared heat-spreading hood extended inwardly of the tank from the inner end of the housing, a cone-shaped electric heat lamp mounted in the said lamp socket and projected out into the heat-spreading hood and a water-tight partition and collar at the juncture of the housing and heat-spreading hood, the said collar freely encircling the cone-shaped heat-lamp and the latter being resiliently retracted against the collar by the said springs of the socket element, for preventing water seeping into the housing from the water tank.

With the stated objects in view, together with such additional objects and advantages as may appear from the specification, attention is now directed to the accompanying drawing as illustrating a preferred embodiment and structural features of the invention, and wherein

Figure 1 is a front end elevation of the unit, as removed from the water tank;

Figure 2 is a longitudinal vertical section on the line 2—2 of Figure 1, the heat-lamp and accessories however being shown in full lines;

Figure 3 is a longitudinal horizontal section on the line 3—3 of Figure 2;

Figure 4 is a side elevational view on a reduced scale, showing the heating unit as mounted within a water tank of oblong construction;

Figure 5 is a top plan view on the same scale as Figure 4, showing the heating unit as mounted within a water tank of circular construction.

2

In practising this invention, I provide a basal ballast box 5, here shown as rectangular in form and closed at the bottom 5*a*, sides 5*b*, outer end 5*c*, and inner end 5*d*. This inner end 5*d* is narrowed down vertically, the sides 5*b* being sloped down correspondingly to meet this end, and a concaved and flared cover plate 5*f* being fitted upon this end, the rear end of the ballast box being left open to enable ballast material 6, such as gravel or crushed rock, to be filled into the box, for a purpose later pointed out.

A cylindrical and water-tight case or housing 7 is mounted centrally upon the basal ballast box 5, the same being relatively narrow for providing lateral openings 8 at the upper side of the box for insertion of the ballast 6 thereinto. The case or housing 7 is closed at the bottom 7*a*, sides 7*b*, top 7*c*, and outer end 7*d*. A flaring, funnel-shaped, heat-projecting hood 7*e* is extended forwardly from the inner end of the housing 7 and out over the inner flaring end of the ballast box 5, and an arcuate flange or bill 7*f* is extended horizontally forward from the upper side of the inner or forward end of the hood 7*e*, as means for more effectively directing heat horizontally forward into the tank in manner later to be pointed out.

A pair of vertically spaced guide pins 9 are seated centrally in the outer end 7*d* of the housing 7 and are extended horizontally inward of the housing, these pins having heads 9*a* at their inner ends. A specially formed electric lamp socket member 10 of insulation material is provided, this socket member being formed with an outstanding annular flange 10*a* at its outer end. This socket member 10 is slidably mounted upon the guide pins 9 by forming holes 10*b* through the flange 10*a* and passing the pins 9 therethrough in the process of assembling the elements. The socket element 10 is normally urged outwardly, towards the closed end 7*d* of the housing 7 by means of coil springs 11 seated over the pins 9 in the process of assembly and braced between the heads 9*a* of the pins and the flange 10*a* of the socket member 10. Water-proofed electrical conductors or lead-in wires 12 are entered into the member 10 in conventional manner, and except for the provision of the flange 10*a*, the socket member 10 is of conventional construction. A conduit pipe 13 is seated at 13*a* into the outer end of the housing 7, and the conductors 12 are extended out through this conduit to any source of electrical energy that may be conveniently provided (not here shown).

A conventional conical form of electrical heat lamp 14 is provided and is seated into the socket of the socket member 10, the electrical energization of the lamp 14 thus being completed in usual manner.

The housing 7 is to be completely waterproofed on all sides, and accordingly a sealed partition 15 is provided, the same comprising centrally apertured and spaced walls of metal or other suitable material, and within the walls of which is compressed a similarly apertured gasket 15*a* of rubber or other suitable resilient material. This partition 15 is firmly seated and sealed within the otherwise open inner end of the housing 7 at the point of connection or juncture with the funnel-like hood 7*e*. The heat lamp 14 is mounted in place in its socket of the socket member 10, by passing the tapered, plug end of the lamp through the central apertures of the partition 15 and screwing the plug of the lamp into its socket in conventional manner. In the process of mounting the lamp 14 in its socket, the socket member 10 is slid inwardly upon the pins 9, thus compressing the springs 11. Thus when the socket member 10 is released, the springs 11 press the socket element outwardly and draw the conical lamp 14 up against the gasket 15*a* for providing a water-tight joint between the lamp and the partition 15, and effectively preventing water from entering the housing 7. In this operation the inner margins of the apertured rubber gaskets 15*a*, press resiliently upon the conical sides of the heat lamp 14, thus effectually sealing the housing 7 against entrance of water thereinto, in the use of the device, as will now be explained.

The water heating apparatus as described is mounted within any oblong stock watering tank 16 (Figure 4) or circular tank (Figure 5) by merely seating one or more of the units within the tank and clamping the unit in position by means of a clamp 18 which is arranged to engage both a side of the tank and the lead-in conduit 13 of the heating apparatus. The ballast 6 in the box 5 holds the unit to the bottom of the tank. When the lamp 14 is energized, heat is projected out into the water in the tank 16 and circulates therethrough in the manner indicated by the arrows in Figure 5.

The parts of the apparatus may, of course, be constructed of any desired and rust-resisting materials best suited for the purpose. Likewise, the dimensions of the units and the parts thereof may be varied as desired to meet the contingencies of varying situations.

It is thought that the construction, use and operation of the invention will be fully understood from the foregoing description, and while I have here shown and described a specific form of the heating unit, it is understood that the same

may be changed as desired, within the scope of the claims.

I claim:

1. A water tank heating unit of the kind referred to, the same comprising a basal ballast box that is open at the upper side for the insertion of ballast such as stone or gravel for holding the unit to the bottom of a tank of water, a water-tight case or housing mounted upon the basal ballast box, for containing and supporting the working elements of the unit, an electric lamp socket movably mounted upon guide pins extended longitudinally inward from the outer end of the said housing, means such as springs for resiliently urging the said socket rearwardly or outwardly upon the guide pins, water-proofed electric leads extended into the socket, a flared heat-spreading hood for extending inwardly of the tank from the inner end of the housing, a cone-shaped electric heat lamp mounted in the said lamp socket and projected out into the heat-spreading hood and a water-tight partition and collar at the juncture of the housing and heat-spreading hood, the said collar freely encircling the cone-shaped heat-lamp and the latter being resiliently retracted against the collar by the said springs of the socket element, for preventing water seeping into the housing from the water tank.

2. In a water heating apparatus of the kind described, for mounting in a stock watering tank, a water-proofed housing, an electrical socket mounted within the housing, electrical lead-in wires extended into the housing and operatively connected with the socket therein, an electrical heat lamp extended at its base through a side of the housing and seated in the electrical socket, the outer effective end of the heat lamp being extended outwardly of the housing and into the watering tank, means including an open topped ballast box and ballast therein for holding the housing to the bottom of the water tank when the latter is filled with water.

3. In an apparatus according to claim 2, means for releasably securing the housing to an end or side of the water tank.

ELMER TRANSUE.

REFERENCES CITED

The following references are of record in the file of this patent:

UNITED STATES PATENTS

Number	Name	Date
1,117,277	Supplee	Nov. 17, 1914
1,361,028	Drake	Dec. 7, 1920
1,428,349	Whelan	Sept. 5, 1922
1,723,743	Mason	Aug. 6, 1929
2,432,918	McCaskell	Dec. 16, 1947