(12) STANDARD PATENT (11) Application No. **AU 2018363796 B2**
(19) AUSTRALIAN PATENT OFFICE

(54) Title
Bottom plate assembly comprising a bayonet free collector nozzle

(51) International Patent Classification(s)
B22D 41/50 (2006.01) ***B22D 41/56*** (2006.01)

(21) Application No: **2018363796** (22) Date of Filing: **2018.11.09**

(87) WIPO No: **WO19/092214**

(30) Priority Data

(31) Number	(32) Date	(33) Country
17200984.7	**2017.11.10**	**EP**

(43) Publication Date: **2019.05.16**
(44) Accepted Journal Date: **2023.12.21**

(71) Applicant(s)
Vesuvius Group, S.A.

(72) Inventor(s)
SIBIET, Fabrice

(74) Agent / Attorney
Spruson & Ferguson, GPO Box 3898, Sydney, NSW, 2001, AU

(56) Related Art
US 4887748 A

(12) INTERNATIONAL APPLICATION PUBLISHED UNDER THE PATENT COOPERATION TREATY (PCT)

(19) World Intellectual Property Organization
International Bureau

(43) International Publication Date
16 May 2019 (16.05.2019)

WIPO | PCT

(10) International Publication Number
WO 2019/092214 A1

(51) International Patent Classification:
B22D 41/50 (2006.01) *B22D 41/56* (2006.01)

(21) International Application Number:
PCT/EP2018/080829

(22) International Filing Date:
09 November 2018 (09.11.2018)

(25) Filing Language: English

(26) Publication Language: English

(30) Priority Data:
17200984.7 10 November 2017 (10.11.2017) EP

(71) Applicant: **VESUVIUS GROUP, S.A.** [BE/BE]; rue de Douvrain 17, 7011 GHLIN (BE).

(72) Inventor: **SIBIET, Fabrice**; rue de la Gare 21, 59680 COLLERET (FR).

(74) Agent: **BROHEZ, Véronique**; 17 rue de Douvrain, 7011 GHLIN (BE).

(81) Designated States *(unless otherwise indicated, for every kind of national protection available)*: AE, AG, AL, AM, AO, AT, AU, AZ, BA, BB, BG, BH, BN, BR, BW, BY, BZ, CA, CH, CL, CN, CO, CR, CU, CZ, DE, DJ, DK, DM, DO, DZ, EC, EE, EG, ES, FI, GB, GD, GE, GH, GM, GT, HN, HR, HU, ID, IL, IN, IR, IS, JO, JP, KE, KG, KH, KN, KP, KR, KW, KZ, LA, LC, LK, LR, LS, LU, LY, MA, MD, ME, MG, MK, MN, MW, MX, MY, MZ, NA, NG, NI, NO, NZ, OM, PA, PE, PG, PH, PL, PT, QA, RO, RS, RU, RW, SA, SC, SD, SE, SG, SK, SL, SM, ST, SV, SY, TH, TJ, TM, TN, TR, TT, TZ, UA, UG, US, UZ, VC, VN, ZA, ZM, ZW.

(84) Designated States *(unless otherwise indicated, for every kind of regional protection available)*: ARIPO (BW, GH, GM, KE, LR, LS, MW, MZ, NA, RW, SD, SL, ST, SZ, TZ, UG, ZM, ZW), Eurasian (AM, AZ, BY, KG, KZ, RU, TJ, TM), European (AL, AT, BE, BG, CH, CY, CZ, DE, DK, EE, ES, FI, FR, GB, GR, HR, HU, IE, IS, IT, LT, LU, LV, MC, MK, MT, NL, NO, PL, PT, RO, RS, SE, SI, SK, SM, TR), OAPI (BF, BJ, CF, CG, CI, CM, GA, GN, GQ, GW, KM, ML, MR, NE, SN, TD, TG).

Declarations under Rule 4.17:
— *as to the identity of the inventor (Rule 4.17(i))*
— *as to applicant's entitlement to apply for and be granted a patent (Rule 4.17(ii))*
— *as to the applicant's entitlement to claim the priority of the earlier application (Rule 4.17(iii))*
— *of inventorship (Rule 4.17(iv))*

Published:
— *with international search report (Art. 21(3))*

(54) **Title:** BOTTOM PLATE ASSEMBLY COMPRISING A BAYONET FREE COLLECTOR NOZZLE

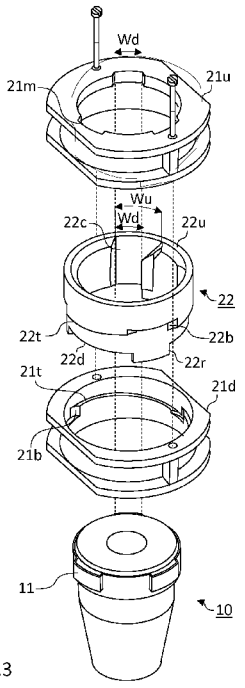

FIG.3

(57) **Abstract:** The present invention concerns a gate for metallurgic vessels provided with a collector nozzle coupled to bottom plate assembly of the gate. The bottom plate assembly of the present invention allows a collector nozzle to be coupled to a bottom gate plate without need of a separate bayonet ring. The bayonet ring is integrated to the bottom plate assembly, allowing a collector nozzle to be mounted by a single robot, or by a single operator more easily than existing systems.

WO 2019/092214 A1

20183637796 23 Nov 2023

Bottom plate assembly comprising a bayonet free collector nozzle

FIELD OF THE INVENTION

[0001] The present invention relates to a novel bottom plate assembly for coupling a collector nozzle to a mechanism attached to a bottom of a metallurgic vessel, such as a ladle or a tundish, requiring neither an additional bayonet ring to be inserted over the collector nozzle, nor any rotation of the collector nozzle. This way, an operator needs handling a collector nozzle only. The present invention also allows the coupling of a collector nozzle to a mechanism attached to a bottom of the metallurgic vessel by a simple robot. As no rotation of the collector nozzle is required for securing the collector nozzle in place, a thin layer of sealing material can be used to seal the collector nozzle in place, without disrupting it by shear strain.

BACKGROUND OF THE INVENTION

[0002] In metal forming processes, molten metal (1) is transferred from one metallurgic vessel (200L, 200T) to another, to a mould (300) or to a tool for ingots. For example, as shown in Figure 1 a ladle (200L) is filled with molten metal out of a furnace (not shown) and transferred through a ladle shroud (111) into a tundish (200T) for casting. The molten metal can then be cast through a pouring nozzle (101) from the tundish to a mould (300) for forming slabs, billets, beams or ingots or directly from a ladle to a tool for ingots. Flow of molten metal out of a metallurgic vessel is driven by gravity through a nozzle system (101, 111) located at the bottom of said vessel. The flow rate can be controlled by a gate and/or a stopper.

[0003] In particular, the inner surface of the bottom floor of a ladle (200L) is provided with an inner nozzle (100) comprising an inner bore. The outlet end of said inner nozzle is coupled to a gate, generally a sliding plate gate or a rotating plate gate, controlling the flow rate of molten metal out of the ladle. In such gates, a fixed plate provided with a bore is fixed to an outer surface of the ladle bottom floor with the bore positioned in registry with the inner nozzle's bore. A sliding or rotating plate, also provided with a bore can move such as to bring the bore in or out of registry with the bore of the fixed plate, thus controlling the flow rate of molten metal out of the ladle. The sliding or rotating plate is coupled either to a collector nozzle, or to a bottom fixed plate, itself coupled to a collector nozzle. In order to protect the molten metal from oxidation as it flows from the ladle into a tundish (200T), a ladle shroud (111) is brought in fluid communication with the outlet end of the collector nozzle and penetrates deep into the

tundish, below the level of molten metal to form a continuous molten metal flowpath shielded from any contact with oxygen between the inlet end of the inner nozzle within the ladle down to the outlet of the ladle shroud immersed in the liquid metal contained in the tundish. A ladle shroud is simply a nozzle comprising a long tubular portion crowned by an upstream coupling portion with a central bore. The ladle shroud is inserted about and sealed to a short collector nozzle (10) coupled to, and jutting out of the outer surface of the ladle bottom floor, and which is separated from the inner nozzle (100) by a gate.

[0004] Similarly, an outlet of the bottom floor of a tundish (200T) is also provided with an inner nozzle (10) rather similar to the one described supra with respect to a ladle. The downstream surface of said inner nozzle can be coupled directly to a pouring nozzle (101) or, alternatively, to a gate or to a tube changing device. In order to protect the molten metal from oxidation as it flows from the tundish to a mould (300), the pouring nozzle (101) penetrates deep into the mould, below the level of molten metal to form a continuous molten metal flowpath shielded from any contact with oxygen between the upstream surface of the inner nozzle within the tundish down to the outlet of the pouring nozzle immersed in the liquid metal flowing into the mould. A pouring nozzle is a nozzle comprising a long tubular portion crowned by an upstream coupling portion with a central bore. A pouring nozzle can be inserted about and sealed to a short collector nozzle (10) coupled to, and jutting out of the outer surface of the tundish bottom floor. For continuous casting operations, flow rate out of a tundish is generally controlled by means of a stopper (7) or the combination of a gate and a stopper. A sliding gate or rotating gate as described above can also be used for the casting of discrete ingots.

[0005] In practice, a ladle is prepared for operation including building the refractory inner liner, fixing a gate to the bottom of the ladle, positioning an inner nozzle, refractory plates and a collector nozzle. When ready for operation, the ladle is driven to a furnace where it is filled with a fresh batch of molten metal, with the gate in a closed configuration. It is then brought to its casting position over a tundish (200T), where a ladle shroud is coupled to the collector nozzle in a casting configuration, such that the outlet end of the collector nozzle (10) is snuggly nested in the bore inlet of the ladle shroud to form a sealing joint (cf. Figure 1(b)). The ladle shroud can be maintained in its casting configuration by a robot, or by any other means known in the art, such as described in WO2015124567. The gate is opened, and the molten metal can flow out of the ladle into the tundish through the inner nozzle, gate, collector nozzle, and ladle shroud. When the ladle is empty, the gate is closed and the ladle shroud is retrieved to allow the removal of the empty ladle and replacement by a second ladle filled with a new batch of molten metal. The ladle and the gate refractories are first inspected for defects.

2018363796 23 Nov 2023

Then the ladle is either sent back to the furnace for a refill of molten metal, or is sent for repair, where one or more of the refractory components (e.g., plates, collector nozzle, and inner nozzle) are replaced when required.

[0006] After a number of pouring cycles by the ladle, various components of the ladle and of the tundish can be worn off or broken and must be changed. This includes the collector nozzle.

[0007] A collector nozzle (10) is generally sealed with a sealing material to a bottom surface of the bottom gate plate (20g) and secured by means of a separate bayonet ring (22b), which is inserted over the collector nozzle and coupled to the frame by rotation thereof. This operation is quite cumbersome for an operator because he must hold the collector nozzle in position in a substantially horizontal position as the ladle is laid down on its side, and at the same time take a (heavy) bayonet, insert it over the collector nozzle and rotate it to secure it to the frame. A simple robot could hardly perform these operations as it would require two arms, one for holding the collector nozzle and one for handling the bayonet. US4887748 describes an example of bayonet-type attachment between a bottom gate plate and a nozzle that is uniformly adjustable during operation Collector nozzles provided with an integrated bayonet have been proposed but have encountered little success, because the weight of the collector nozzle and bayonet is too high for a single operator to handle it. A robot could handle the extra weight, but if the robot is not available at a given moment, it remains very heavy for an operator.

[0008] A screw has also been proposed, wherein the collector nozzle is simply screwed in place onto the frame. The problem with a screwing thread is that the rotation of the collector nozzle may irreversibly damage the thin layer of sealing material (2) applied between the upstream surface (10u) of the collector nozzle and a downstream surface of the downstream gate plate. If the sealing layer is disrupted, molten metal may leak through cracks in the sealing layer during casting, which is obviously undesirable.

[0009] The present invention proposes a bottom plate assembly allowing the coupling of a collector nozzle to a frame without requiring a separate bayonet (22b), without increasing the weight of the collector nozzle by including the bayonet therein, and requiring no rotation of the collector nozzle to securing it to the frame, thus preserving the integrity of the sealing layer sealing the collector nozzle to the downstream gate plate (20g). These and other advantages of the present invention are presented more in details in continuation.

SUMMARY OF THE INVENTION

[0009a] It is an object of the present invention to overcome and/or alleviate one or

2018363796 23 Nov 2023

more of the disadvantages of the prior art or provide the consumer with a useful or commercial choice.

[0010] In one aspect, the present invention provides a bottom plate assembly comprising:

(A) A collector nozzle comprising:

- An upstream surface (and a downstream surface joined to one another by a lateral surface), and comprising a bore extending along a longitudinal axis, Z, from the upstream surface to the downstream surface,
- N protrusions, with $N \geq 2$ (preferably $N = 3$ or 4) distributed, preferably evenly, around a perimeter of the lateral surface, each protrusion comprising an upper surface which is adjacent to the upstream surface of the collector nozzle and a lower surface separated from the upper surface by a height of the protrusion, and having an azimuthal width, W, measured normal to the longitudinal axis, Z,

(B) A frame comprising a gate plate receiving unit for receiving a lower gate plate (20g), and

(C) a nozzle coupling unit for receiving and rigidly coupling the collector nozzle to the frame, said nozzle coupling unit comprising a nozzle receiving bushing rigidly fixed to the frame,

wherein, the nozzle coupling unit further comprises a bayonet ring comprising an upstream edge and a downstream edge separated by a height of the bayonet ring, which is permanently and rotatably mounted in the nozzle receiving bushing such that the bayonet ring can rotate about the longitudinal axis, Z, and wherein the bayonet ring comprises an inner surface provided with N channels extending along the longitudinal axis, Z, from the downstream edge to the upstream edge, wherein the N channels have a downstream width, Wd, at the level of the downstream edge which is substantially equal to, slightly larger than the width, W, of the protrusions, allowing the translation along the longitudinal axis, Z, of the collector nozzle through the downstream edge of the bayonet ring with the protrusions engaged in corresponding channels until they contact the corresponding protrusion mating structures, and wherein the N channels have an upstream width, Wu, at the level of the upstream edge which is larger than the downstream width, Wd, thus allowing the rotation of the bayonet ring about the longitudinal axis, Z, with respect to the collector nozzle until an edge of the channel

contacts the lower surface of the corresponding protrusion, thus locking the collector nozzle in an operating position.

[0011] In the present document, the expressions *"[Wd is] slightly larger than the width, W"* indicates that the downstream width, Wd, should be sufficiently larger than W to allow the protrusions to move along the downstream end of the channels, and sufficiently narrow to guide the protrusions towards the corresponding protrusion mating structures. For allowing a movement of the protrusions along the channels, Wd can be at least 1% larger than W, preferably at least 2% larger than W. For allowing the guiding of the protrusions, Wd can be not more than 10% larger than W, preferably not more than 5% larger than W.

[0012] In a preferred embodiment, the N channels extend from the downstream edge over at least 40% of the height of the bayonet ring with a substantially constant width, Wd, and widen until reaching the width, Wu, at the upstream edge. It is preferred that the bayonet ring comprises an outer surface provided with a thread mating a thread provided at an inner surface of the nozzle receiving bushing, such that rotation of the bayonet ring with respect to the nozzle receiving bushing translates the bayonet ring along the longitudinal axis, Z.

[0013] The nozzle receiving bushing preferably comprises protrusion mating structures for receiving the protrusions and preventing the collector nozzle from rotating about the longitudinal axis, Z. This is useful as the rotation of bayonet ring may drive the rotation of the collector nozzle which may thus disrupt the integrity of the sealing material applied between the upstream surface of the collector nozzle and a bottom surface of the bottom gate plate. In this embodiment, the bayonet ring preferably comprises an outer surface provided with a rotation stop, and the nozzle receiving bushing preferably comprises a corresponding rotation stop provided at an inner surface of the nozzle receiving bushing, which stops rotation of the bayonet ring when the channels of the bayonet ring face the protrusion mating structures of the nozzle receiving bushing.

[0014] The nozzle receiving bushing is preferably formed of an upstream portion rigidly fixed to the frame, and of a downstream portion coupled to the upstream portion and sandwiching the bayonet ring, allowing rotation of the bayonet ring with respect to the nozzle receiving bushing, but not extraction of the bayonet ring from the nozzle receiving bushing. To facilitate rotation of the bayonet ring, it is preferred that the downstream edge of the bayonet ring comprises rotating means, including protrusions or recesses, allowing the insertion of a tool for rotating the bayonet ring about the longitudinal axis, Z.

2018363796 23 Nov 2023

[0015] The bottom plate assembly of the present invention can be part of a gate system mounted at a bottom of a metallurgic vessel, including a ladle, a furnace, or a tundish. The frame is part of the gate system and can either be:

- A mobile carriage in a two-plate gate, or
- A fixed frame in a three-plate gate.

[0016] The present invention also concerns a method for mounting a collector nozzle onto a gate system, said method comprising the following steps:

(a) Providing a bottom plate assembly as described above,

(b) Engaging the upstream surface of the collector nozzle through the bayonet ring from the downstream edge, with the N protrusions engaged in the corresponding channels,

(c) inserting the collector nozzle along the longitudinal axis, Z, through the bayonet ring all the way until the collector nozzle reaches an operating position,

(d) rotating the bayonet ring about the longitudinal axis, Z, with respect to the collector nozzle until the collector nozzle is locked into its operating position and cannot move along the longitudinal axis, Z.

[0017] in a preferred embodiment, the bottom plate assembly comprises a nozzle receiving bushing provided with protrusion mating structures as described supra, and wherein the method further comprises the step of positioning the channels of the bayonet ring face to face with the corresponding nozzle mating structures of the nozzle receiving bushing, prior to step (c) of inserting the collector nozzle along the longitudinal axis, Z, through the bayonet ring all the way until the collector nozzle reaches its operating position with the protrusions engaged in the nozzle mating structures and thus prevented from rotating with respect to the longitudinal axis, Z.

[0018] Prior to engaging the collector nozzle through the bayonet ring in step (c), the method of the present invention may further comprise the following steps,

- A bottom gate plate is positioned into the gate plate receiving unit and is rigidly coupled to the frame,
- a refractory sealing material is applied onto the upstream surface of the collector nozzle, such that when the collector nozzle reaches its operating

position in step (d), the sealing material contacts a downstream surface of the bottom gate plate.

[0019] It is preferred that at least some, preferably all, the steps (b) to (d) of method of the present invention are carried out by a robot

BRIEF DESCRIPTION OF THE FIGURES

[0020] For a fuller understanding of the nature of the present invention, reference is made to the following detailed description taken in conjunction with the accompanying drawings in which:

Fig. 1 represents a general view of a casting installation for casting metal.

Fig. 2 shows a collector nozzle as defined in the present invention.

Fig. 3 shows an exploded view of the coupling elements of a bottom carriage assembly according to the present invention;

Fig. 4 shows a bottom carriage assembly according to the present invention;

Fig. 5 illustrates the principle of coupling a collector nozzle to a bottom carriage assembly according to the present invention;

Fig. 6 shows a bottom plate assembly according to the present invention belonging to a two-plate gate.

Fig. 7 shows a bottom plate assembly according to the present invention belonging to a three-plate gate.

DETAILED DESCRIPTION.

[0021] As discussed supra, Figure 1 shows a metallurgic installation comprising a ladle (200L) containing molten metal filled from a furnace, and located above a tundish (200T), which is itself in fluid communication with a mould (300). The transfer of molten metal from the ladle to the tundish and from the tundish to the mould are carried out through corresponding nozzles: a ladle shroud (111) for the former, and a pouring nozzle (101) for the latter. Practically in all cases for ladles and in some cases for tundishes, the flow rate of metal through the corresponding nozzles is controlled by a gate comprising sliding plates (20g, 30g) bringing in and out of alignment bores provided in each plate. In continuation, the description focuses on ladles, but it is clear that the same teaching applies *mutatis mutandis* to tundishes and to any metallurgic vessels which are provided with a gate.

[0022] The ladle shroud (111) protects the molten metal from any contact with air as it is poured out of the ladle (200L) into the tundish (200T). It is coupled to the outlet of the ladle by means of a collector nozzle (10) over which it fits snugly (cf. Figure 1(b)). As illustrated in Figure 2, the collector nozzle used in the present invention comprises:

(a) an upstream surface (10u) and a downstream surface (10d) joined to one another by a lateral surface (10L), and comprising a bore (10b) extending along a longitudinal axis, Z, from the upstream surface to the downstream surface,

(b) N protrusions (11), with $N \geq 2$, distributed around a perimeter of the lateral surface, each protrusion comprising an upper surface (11u) which is adjacent to the upstream surface of the collector nozzle and a lower surface (11d) separated from the upper surface by a height of the protrusion, and having an azimuthal width, W, measured normal to the longitudinal axis, Z

[0023] As illustrated in Figure 2(c), the azimuthal width, W, is herein defined as the largest width of the protrusions (11) measured normal to the longitudinal axis, Z.

[0024] The collector nozzle is coupled to the bottom outlet of the ladle with a gate sandwiched between the two. The gate comprises a bottom plate assembly comprising a frame (20f) comprising a gate plate receiving unit for receiving a lower gate plate (20g) and provided with a nozzle coupling unit (20) for receiving and rigidly coupling the collector nozzle (10) to the frame. As shown in Figures 6, and 7, the nozzle coupling unit (20) can be fixed to the frame (20f) with fixing means (3) well known to a person of ordinary skill in the art, including screws and/or bolts. The nozzle coupling unit comprises a nozzle receiving bushing (21) rigidly fixed to the frame and preferably comprising protrusion mating structures (21m) for receiving the protrusions and preventing the collector nozzle from rotating about the longitudinal axis, Z. The gist of the present invention is the new design of the nozzle coupling unit combined with the mating protrusions (11) of the collector nozzle which, in combination, allow for an easier coupling and withdrawal of the collector nozzle to and from the gate.

[0025] As shown in Figures 3&4, the nozzle coupling unit comprises a bayonet ring (22) comprising an upstream edge (22u) and a downstream edge (22d) separated by a height of the bayonet ring, which is permanently and rotatably mounted in the nozzle receiving bushing such that the bayonet ring can rotate about the longitudinal axis, Z. The bayonet ring comprises an inner surface provided with N channels extending along the longitudinal axis, Z, from the downstream edge to the upstream edge. The N channels have a downstream width, Wd, at the level of the downstream edge which is substantially equal to, slightly larger than the width, W, of the protrusions, allowing the translation

along the longitudinal axis, Z, of the collector nozzle through the downstream edge of the bayonet ring with the protrusions engaged in corresponding channels. In a preferred embodiment, the nozzle receiving bushing is provided with protrusion mating structures (21m). The collector nozzle can thus be translated through the bayonet ring until the protrusions engage the corresponding protrusion mating structures, thus preventing the collector nozzle from rotating about the longitudinal axis, Z. The N channels have an upstream width, Wu, at the level of the upstream edge which is larger than the downstream width, Wd, thus allowing the rotation of the bayonet ring about the collector nozzle until an edge of the channel contacts the lower surface of the corresponding protrusion, thus locking the collector nozzle in an operating position.

[0026] The nozzle coupling element of the present invention is substantially advantageous over conventional coupling systems comprising a separate bayonet which must be engaged over the collector nozzle as it is held in place by hand or by a robot, often requiring a second operator or a second robot. It is also advantageous over collecting nozzles provided with an integrated bayonet because (1) such collecting nozzles are very heavy to handle, and (2) collector nozzles, comprising a refractory portion exposed to molten metal flow, must be changed at regular intervals, whilst bayonets, made of metal and not exposed to excessive heat and wear can be re-used several times, thus unnecessarily increasing the cost of a collector nozzle.

Collector Nozzle (10)

[0027] An embodiment of collector nozzle suitable for the present invention is illustrated in Figure 2. As traditional collector nozzles, a collector nozzle suitable for the present invention comprises an upstream surface (10u) and a downstream surface (10d) joined to one another by a lateral surface (10L), and comprising a bore (10b) extending along a longitudinal axis, Z, from the upstream surface to the downstream surface. The lateral surface (10L) generally has a circular cross section, concentric with the bore. It may comprise a downstream portion tapering towards the downstream surface (10d), to facilitate the coupling of a ladle shroud thereto, having a tapered bore matching the geometry of the downstream portion.

[0028] The collector nozzle (10) comprises N protrusions (11), with $N \geq 2$, distributed around a perimeter of the lateral surface, and adjacent to the upstream surface (10u). The number, N, of protrusions is preferably $N = 3$ or 4. $N = 3$ protrusions ensures a stable setting of the collector nozzle in the nozzle coupling unit and, at the same time, reduces frictions upon rotation of the bayonet. The N protrusions are preferably distributed evenly around the perimeter of the lateral surface (10L).

[0029] The N protrusions (11) serve for securing the collector nozzle to the bottom plate assembly by interaction of the protrusions with the portion of the channels adjacent to the upstream edge of the bayonet, of upstream width, Wu. In embodiments wherein the nozzle receiving bushing comprises protrusion mating structures (21m), the protrusions (11) engaged in said protrusion mating structures prevent the collector nozzle from rotating. This is useful as when the bayonet ring is being rotated, the collector nozzle should not rotate together with the bayonet ring.

[0030] The N protrusions (11) have an upper surface (11u) and a lower surface (11d) separated from the upper surface by a height of the protrusion. The height of the protrusions must be sufficient for the protrusions to mechanically resist the forces applied thereto during coupling of the nozzle to the ladle and during a casting operation. For example, the height of the protrusions can be comprised between 10 and 100 mm, preferably between 20 and 70 mm, more preferably between 30 and 60 mm. Similarly, the azimuthal width, W, measured normal to the longitudinal axis, Z, must be sufficient for ensuring stability of the coupling during casting operation. The azimuthal width, W, depends on the number, N, of protrusions. As illustrated in Figure 2(c), for a collector nozzle having a circular cross-section of radius, R, the azimuthal width, $W = \alpha R$, wherein α is the azimuthal angle encompassing a protrusion. The azimuthal angle, α, is preferably comprised between $360° / 5 N = 72° / N$ and $360° / 2 N = 180° / N$, preferably between $90° / N$ and $135° / N$. For example, for $N = 3$ protrusions, the azimuthal angle can be of the order of $\alpha = 30$ to $50°$.

[0031] The collector nozzle is made of a refractory material for resisting the high temperatures of the molten metal flowing through the bore (10b). The collector nozzle preferably comprises a metal can (10c) cladding a portion of the lateral surface (10L) comprising an upstream edge adjacent to, yet recessed from the upstream surface (10u). The metal can preferably lines at least a portion of the protrusions which interacts with the channel edges upon rotation of the bayonet ring. A portion of the downstream portion of the collector nozzle can also be clad by the metal can, to protect the refractory material from wear as a ladle shroud is engaged over the lateral surface thereof. The metal can comprises a downstream edge recessed from the downstream surface of the collector nozzle. The downstream edge can be adjacent to the downstream surface of the collector nozzle, or not. DE102004008382 describes an interchangeable metal can made of cast iron.

Nozzle Coupling Unit (20)

[0032] The nozzle coupling unit is used for receiving and rigidly coupling the collector nozzle (10) to the frame. It comprises a nozzle receiving bushing (21) rigidly fixed to the

frame and preferably comprises protrusion mating structures (21m) for receiving the protrusions and preventing the collector nozzle from rotating about the longitudinal axis, Z, when the collector nozzle has reached its operating position along the longitudinal axis, Z. The operating position of the collector nozzle along the longitudinal axis, Z, corresponds to a position wherein the upstream surface (10u) of the collector nozzle can be sealingly coupled to a bottom surface of a bottom plate (20g) of the gate, by means of a sealing material (2), with the bore (10b) of the collector nozzle being in registry with a bore of the bottom plate (20g) (cf. Figures 6 and 7). At this stage, the collector nozzle is positioned in its operating position, but it is not secured yet. The protrusion mating structures (21m) can be in the form of channels as illustrated in Figure 3, of width mating the azimuthal width of the protrusions (11) and of height lower than the height of the protrusions. Alternatively, the protrusion mating structures (21m) can be formed by protruding members flanking on either side a protrusion when the collector nozzle is in operating position, as shown in Figure 5. As long as the protrusion mating structures (21m) prevent the collector nozzle from rotating about the longitudinal axis, Z, the present invention is not restricted by any particular geometry or design thereof. In case the nozzle receiving bushing is not equipped with protrusion mating structures (21m), care must be taken when rotating the bayonet ring to prevent the collector nozzle from rotating therewith.

[0033] The gist of the present invention is to permanently mount a bayonet ring (22) in the nozzle receiving bushing, such that it can rotate about the longitudinal axis. The bayonet ring comprises an upstream edge (22u) and a downstream edge (22d) separated by a height of the bayonet ring. It also comprises an inner surface provided with N channels extending along the longitudinal axis, Z, from the downstream edge to the upstream edge. The N channels have a downstream width, Wd, at the level of the downstream edge which is substantially equal to, slightly larger than the width, W, of the protrusions, allowing the translation along the longitudinal axis, Z, of the collector nozzle through the downstream edge of the bayonet ring with the protrusions engaged in corresponding channels until they contact the corresponding protrusion mating structures (21m). When the protrusions of the collector nozzle are engaged in the portion of channels of downstream width, Wd, the collector nozzle can be translated along the longitudinal axis, Z, but there cannot be any substantial rotation of the bayonet ring with respect to the collector nozzle.

[0034] The N channels have an upstream width, Wu, at the level of the upstream edge which is larger than the downstream width, Wd. When the protrusions are in this portion of the channels, the bayonet ring can rotate about the longitudinal axis, Z, with respect to the collector nozzle until an edge of the channel contacts the lower surface of the

corresponding protrusion, thus locking the collector nozzle in an operating position.

[0035] As shown in Figures 3 and 5, the channels (22c) of the bayonet ring can have a downstream portion of constant downstream width, Wd, followed an upstream portion flaring out progressively from the downstream width, Wd, to the upstream width, Wu, with Wu > Wd. Alternatively, the channels may abruptly pass from the downstream width, Wd, to the upstream width, Wu. A progressive transition from the downstream width, Wd, to the upstream width, Wu, is preferred because the rotation of the bayonet ring also forces the collector nozzle along the longitudinal axis, thus allowing a sealed contact with the bottom plate (20g) of the gate. The downstream portion of the channels (22c) may extend over at least 40% of the height of the bayonet ring. Preferably the downstream portion extends over not more than 80% of the height of the bayonet ring. The upstream portion must have a height greater than the height of the protrusions of the collector nozzle, else the bayonet ring could never rotate with respect to the collector nozzle.

[0036] The channel width can increase at one side only of an axis of the channel forming an L-shaped channels, as shown in Figures 3&5, thus allowing rotation of the bayonet ring in one direction only. Alternatively, the channel width can increase symmetrically with respect to the axis of the channel, forming a T-shaped channels and allowing rotation of the ring in both directions. In the latter case, it is important to remember in which direction the bayonet ring has been rotated to secure the collector nozzle, so that it can be rotated in the right direction when retrieving a spent collector nozzle.

[0037] In a preferred embodiment illustrated in Figure 3, the bayonet ring comprises an outer surface provided with a thread (22t) mating a thread (21t) provided at an inner surface of the nozzle receiving bushing. This way, the rotation of the bayonet ring with respect to the nozzle receiving bushing translates the bayonet ring along the longitudinal axis, Z, and presses the collector nozzle deeper towards the bottom plate (22g). With this embodiment, the channel may abruptly widen from the downstream width, Wd, to the upstream width, and yet still allows pushing the collector nozzle along the longitudinal axis, Z, upon rotation of the bayonet ring.

[0038] In yet a preferred embodiment, the bayonet ring comprises an outer surface provided with a rotation stop (22b) shown in Figure 3; and wherein the nozzle receiving bushing comprises a corresponding rotation stop (21b) provided at an inner surface of the nozzle receiving bushing, which stops rotation of the bayonet ring when the channels (22c) of the bayonet ring face the protrusion mating structures (21m) of the nozzle receiving bushing. With this embodiment, the position of a collector nozzle along the

longitudinal axis, Z, can be reproduced consistently and very easily, without requiring any measurement or additional tool.

[0039] As illustrated in Figure 3, in order to facilitate rotation of the bayonet ring, it is preferred to provide the downstream edge of the bayonet ring with rotating means (22r), including protrusions or recesses, allowing the insertion of a tool for rotating the bayonet ring about the longitudinal axis, Z. This is very helpful for tightly securing the collector nozzle in place, and even more useful for unfastening the collector nozzle from the bayonet ring after use.

[0040] The bayonet ring (22) is part of the nozzle coupling unit and remains in place when coupling a new collector nozzle to the bottom plate assembly. In one embodiment illustrated in Figures 3&4, the bayonet ring is sandwiched between an upstream portion (21u) and a downstream portion (21d) of the nozzle receiving bushing. The upstream portion (21u) is rigidly fixed to the frame (20f), and the downstream portion (20d) is rigidly fixed to the upstream portion. With this construction, the bayonet ring can rotate about the longitudinal axis but cannot be removed from the nozzle coupling unit without first uncoupling the downstream portion of the bushing from the upstream portion. Alternatively, the nozzle receiving bushing can be monolithic and coupled directly to the frame (20f) sandwiching the bayonet ring between the bushing and the frame.

Coupling of the collector nozzle to the bottom plate assembly

[0041] Figure 5 shows the various steps for securing a collector nozzle to a nozzle coupling unit, and Figure 4 shows a transverse cut of a bottom plate assembly according to the present invention, with a collector nozzle secured in its operating position. The nozzle receiving bushing of Figure 5 is provided with nozzle mating structures (21m). In such embodiment, as shown in Figure 5(a), the bayonet ring must first be rotated until the channels (22c) of the bayonet ring are positioned face to face with the corresponding nozzle mating structures (21m). The upstream surface of the collector nozzle (10) is then engaged through the bayonet ring (22) from the downstream edge (22d), with the N protrusions engaged in the corresponding channels (22c). As shown in Figure 5(b), the collector nozzle is then inserted along the longitudinal axis, Z, through the bayonet ring all the way until the protrusions (11) of the collector nozzle are engaged in the protrusion mating structures (21m). The collector nozzle is thus prevented from rotating with respect to the longitudinal axis, Z, but at this stage, it is not secured and can slide out along the longitudinal axis, Z. Absent protrusion mating structures (21m) the collector nozzle is not prevented from rotating about the longitudinal axis, Z. As shown in Figure 5(c), for securing the collector nozzle, the bayonet ring is rotated with respect to the longitudinal axis, Z, engaging the upstream portion of the channels over the

protrusions until they contact an edge of the channels, thus locking the collector nozzle into its operating position, which cannot move along the longitudinal axis, Z, anymore.

[0042] To optimize the locking operation, it is preferred that the geometry of the upstream portions of the channels and the portions of the protrusions which contact the channels' edges be complementary, avoiding contact areas generating excessive stress concentration, such as corners and the like. These portions of the protrusions are preferably lined with a metal can (10c) lest the refractory would break upon rotating the bayonet ring too tightly.

[0043] The same operations are carried in reverse to unlock and withdraw a spent collector nozzle. The bayonet ring (22) is first rotated to unlock the collector nozzle. Preferably this is carried out with a tool gripping the rotation gripping means (22r) of the bayonet ring. The collector nozzle can then be pulled out along the longitudinal axis, Z, with sufficient force to disrupt the sealing material (2). The bayonet ring remains within the nozzle receiving bushing and a new collector nozzle can be mounted again as described above.

[0044] The present invention is highly advantageous in that all the foregoing operations can be carried out easily by a single operator or by a single robot. This is not the case with conventional systems comprising a separate bayonet ring, and collector nozzles provided with an integrated bayonet ring are much heavier to handle.

Two- and Three-Plate Gates

[0045] As illustrated in Figures 6&7, the upstream surface (10u) of a collector nozzle is coupled to a surface of a bottom plate of a gate. A sealing contact between the two refractory surfaces is ensured by a sealing material (2). Prior to engaging the collector nozzle through the bayonet ring as discussed above, a bottom gate plate (20g) is positioned into the gate plate receiving unit of the frame (20f) and is rigidly coupled to the frame. A refractory sealing material (2) is applied onto the upstream surface (10u) of the collector nozzle, such that when the collector nozzle reaches its operating position with the upstream surface thereof contacting a downstream surface of the bottom gate plate, the sealing material is sandwiched between the collector nozzle and the bottom gate plate, forming a sealed contact between the two.

[0046] The bottom plate assembly of the present invention is part of a gate system which is fixed to a bottom surface of a ladle (200L) by fixing means (3) well known to a person of ordinary skill in the art, and generally including screws and/or bolts.

[0047] In a two-plate gate system as illustrated in Figure 6, the bottom gate plate (20g)

is provided with a bore and is coupled in sliding relationship by translation or rotation) to a top gate plate (30g) provided with a similar bore. The top gate plate (30g) is rigidly coupled to a top frame (30f) which is itself rigidly coupled to the bottom of the ladle. The frame (20f) to which the bottom gate plate is rigidly coupled is a carriage which is mobile with respect to the top frame (30f). The movements of the carriage frame (20f) with respect to the top frame (30f) are actuated by a pneumatic or hydraulic cylinder (20p) and/or an electric drive, and allow sliding the bottom gate plate over the top gate plate (30g) such as to bring the bore of the gate plates in and out of registry, to open or close the gate (cf. Figure 6(a)&(b)).

[0048] As can be seen in Figure 6(a)&(b), because in two-plate gates, the collector nozzle is coupled to a mobile carriage frame (20f), the ladle shroud, which is an elongated tube engaged over the collector nozzle and extending far below the ladle bottom (cf. Figure 1), moves with the carriage as the bottom gate plate is being operated to open or close the gate, to control the molten metal flow rate. In some applications, such movements of the ladle shroud are not acceptable. In order to operate a gate without moving the collector nozzle and the ladle shroud coupled thereto, a three-plate gate can be used instead.

[0049] A three-gate plate is illustrated in Figure 7. Contrary to a two-gate plate, in a three gate-plate the bottom gate plate (20g) to which the collector nozzle is coupled is fixed with respect to the top gate plate (30g) and to the ladle outlet. The frame (20f) is either rigidly fixed to, or forms a single structure with the top frame (30f). The flow rate of molten metal is controlled by moving a mid-gate plate (25g) sandwiched between the bottom and top gate plates. The mid-gate plate (25g) is provided with a bore similar to the bores of the bottom and top gate plates. By moving the mid-gate plate with respect to the bottom and top gate plates, the bore of the mid-gate plate is brought in or out of registry with respect to the bores of the bottom and top gate plates. This way, the flow rate of molten metal can be controlled without moving the collector nozzle (10) and the ladle shroud (111) coupled thereto.

[0050] The description above focused on a collector nozzle coupled to a ladle (200L), for coupling a ladle shroud (111). It is clear that the same applies *mutatis mutandis* to a collector nozzle coupled to a tundish (200T) for coupling a pouring nozzle (101), or to any metallurgic vessel provided with a nozzle to be coupled thereto.

[0051] In this specification, the terms, "first", "second" etc. are intended to differentiate between different features of the present invention and are not intended to limit the present invention to a particular order of implementation unless the context indicates otherwise.

2018363796 23 Nov 2023

[0052] In this specification, the terms "comprises", "comprising" or similar terms are intended to mean a non-exclusive inclusion, such that an apparatus that comprises a list of elements does not include those elements solely but may well include other elements not listed.

[0053] The reference to any prior art in this specification is not, and should not be taken as, an acknowledgement or any form of suggestion that the prior art forms part of the common general knowledge.

[0054] It will be appreciated that the present invention is not limited to the specific embodiments described herein. Skilled addressees will identify variations from the specific embodiments described herein that will nonetheless fall within the scope of the present invention, which is determined by the following claims.

Ref.#	Feature
1	Molten metal
2	Sealing material
3	Rigid fixation
10	Collector nozzle
10b	Collector nozzle bore
10c	can
10d	Collector nozzle downstream surface
10L	Collector nozzle lateral surface
10u	Collector nozzle upstream surface
11	Protrusion
11d	Protrusion lower surface
11u	Protrusion upper surface
20	Nozzle coupling unit
20f	Frame
20g	Lower gate plate
20p	Hydraulic piston
21	Nozzle receiving bushing
21b	Blocking stop of bayonet ring rotation
21d	Downstream portion of the nozzle receiving bushing
21m	Protrusion mating structure
21t	Thread of nozzle receiving bushing
21u	Upstream portion of the nozzle receiving bushing
22	Bayonet ring
22b	Rotation blocking stop
22c	Channel for receiving protrusions
22d	Downstream edge of the bayonet ring
22r	Rotation gripping means
22t	Thread of bayonet ring
22u	Upstream edge of the bayonet ring
25f	Carriage supporting mid-gate plate 25g
25g	Mid-gate plate in a 3-plate gate
30f	Upper frame
30g	Upper gate plate

2018363796 23 Nov 2023

100	Inner nozzle
101	Pouring nozzle
111	Ladle shroud
200	Metallurgic vessel
200L	Ladle
200r	Refractory lining of the Metallurgic vessel
200T	Tundish
211	Robot
W	Protrusion width (maximum)
Wd	Channel width adjacent the downstream edge
Wu	Channel width adjacent the upstream edge
Z	Longitudinal axis

2018363796 23 Nov 2023

Claims

1. Bottom plate assembly comprising:

(A) a collector nozzle comprising:

(a) an upstream surface and a downstream surface joined to one another by a lateral surface, and comprising a bore extending along a longitudinal axis from the upstream surface to the downstream surface,

(b) N protrusions, with $N \geq 2$, distributed around a perimeter of the lateral surface, each protrusion comprising an upper surface which is adjacent to the upstream surface of the collector nozzle and a lower surface separated from the upper surface by a height of the protrusion, and having an azimuthal width measured normal to the longitudinal axis

(B) a frame comprising a gate plate receiving unit for receiving a lower gate plate, and

(C) a nozzle coupling unit for receiving and rigidly coupling the collector nozzle to the frame, said nozzle coupling unit comprising a nozzle receiving bushing rigidly fixed to the frame,

wherein,
the nozzle coupling unit further comprises a bayonet ring comprising an upstream edge and a downstream edge separated by a height of the bayonet ring, which is permanently and rotatably mounted in the nozzle receiving bushing such that the bayonet ring can rotate about the longitudinal axis and wherein the bayonet ring comprises an inner surface provided with N channels extending along the longitudinal axis from the downstream edge to the upstream edge, wherein the N channels have a downstream width at the level of the downstream edge which is slightly larger than the azimuthal width (W) of the protrusions, allowing the translation along the longitudinal axis of the collector nozzle through the downstream edge of the bayonet ring with the protrusions engaged in corresponding channels until they contact the corresponding protrusion mating structures, and wherein the N channels have an upstream width at the level of the upstream edge which is larger than the downstream width thus allowing the rotation of the bayonet ring about the longitudinal axis with respect to the collector nozzle until

an edge of the channel contacts the lower surface of the corresponding protrusion, thus locking the collector nozzle in an operating position.

2. Bottom plate assembly according to claim 1, wherein N = 3 or 4, and wherein the N protrusions are distributed evenly around the perimeter of the lateral surface.

3. Bottom plate assembly according to claim 1 or 2, wherein the N channels extend from the downstream edge over at least 40% of the height of the bayonet ring with a constant width and widen until reaching the width at the upstream edge.

4. Bottom plate assembly according to any one of the preceding claims, wherein the bayonet ring comprises an outer surface provided with a thread mating a thread provided at an inner surface of the nozzle receiving bushing, such that rotation of the bayonet ring with respect to the nozzle receiving bushing translates the bayonet ring along the longitudinal axis.

5. Bottom plate assembly according to any one of the preceding claims, wherein the nozzle receiving bushing comprises protrusion mating structures for receiving the protrusions and preventing the collector nozzle from rotating about the longitudinal axis.

6. Bottom plate assembly according to claim 5, wherein the bayonet ring comprises an outer surface provided with a rotation stop, and wherein the nozzle receiving bushing comprises a corresponding rotation stop provided at an inner surface of the nozzle receiving bushing, which stops rotation of the bayonet ring when the channels of the bayonet ring face the protrusion mating structures of the nozzle receiving bushing.

7. Bottom plate assembly according to any one of the preceding claims, wherein the nozzle receiving bushing is formed of an upstream portion rigidly fixed to the frame, and of a downstream portion coupled to the upstream portion and sandwiching the bayonet ring, allowing rotation of the bayonet ring with respect to the nozzle receiving bushing, but not extraction of the bayonet ring from the nozzle receiving bushing.

8. Bottom plate assembly according to any one of the preceding claims, wherein the downstream edge of the bayonet ring comprises rotating means, including protrusions

or recesses, allowing the insertion of a tool for rotating the bayonet ring about the longitudinal axis.

9. Bottom plate assembly according to any one of the preceding claims, wherein the frame is either:

(a) a mobile carriage in a two-plate gate, or

(b) a fixed frame in a three-plate gate.

10. Bottom plate assembly according to any one of the preceding claims, which is part of a gate system mounted at a bottom of a metallurgic vessel, including a ladle, a furnace, or a tundish.

11. Method for mounting a collector nozzle onto a gate system, said method comprising the following steps:

(a) providing a bottom plate assembly according to any one of the preceding claims,

(b) engaging the upstream surface of the collector nozzle through the bayonet ring from the downstream edge, with the N protrusions engaged in the corresponding channels,

(c) inserting the collector nozzle along the longitudinal axis through the bayonet ring all the way until the collector nozzle reaches an operating position,

(d) rotating the bayonet ring about the longitudinal axis with respect to the collector nozzle until the collector nozzle is locked into its operating position and cannot move along the longitudinal axis.

12. Method according to claim 11, wherein the bottom plate assembly is according to claim 5 or 6, and comprising the step of positioning the channels of the bayonet ring face to face with the corresponding nozzle mating structures of the nozzle receiving bushing, prior to step (c) of inserting the collector nozzle along the longitudinal axis through the bayonet ring all the way until the collector nozzle reaches its operating

2018363796 23 Nov 2023

position with the protrusions engaged in the nozzle mating structures and thus prevented from rotating with respect to the longitudinal axis.

13. Method according to any one of the preceding claims 11 or 12, wherein prior to engaging the collector nozzle through the bayonet ring in step (c),

- a bottom gate plate is positioned into the gate plate receiving unit and is rigidly coupled to the frame,
- a refractory sealing material is applied onto the upstream surface of the collector nozzle, such that when the collector nozzle reaches its operating position in step (d), the sealing material contacts a downstream surface of the bottom gate plate.

14. Method according to any one of the preceding claims 11 to 13, wherein at least some of the steps (b) to (d) of claim 11 are carried out by a robot.

15. Method according to any one of the preceding claims 11 to 13, wherein all the steps (b) to (d) of claim 11 are carried out by a robot.

Vesuvius Group, S.A.

Patent Attorneys for the Applicant/Nominated Person

SPRUSON & FERGUSON

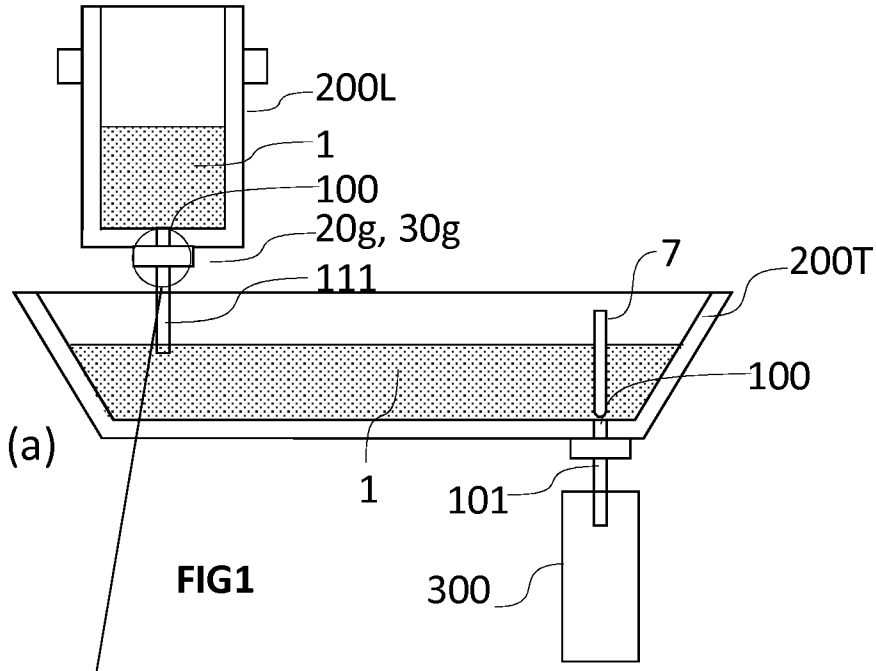
200L
1
100
20g, 30g
111
7
200T
100
(a)
1
101
300

FIG1

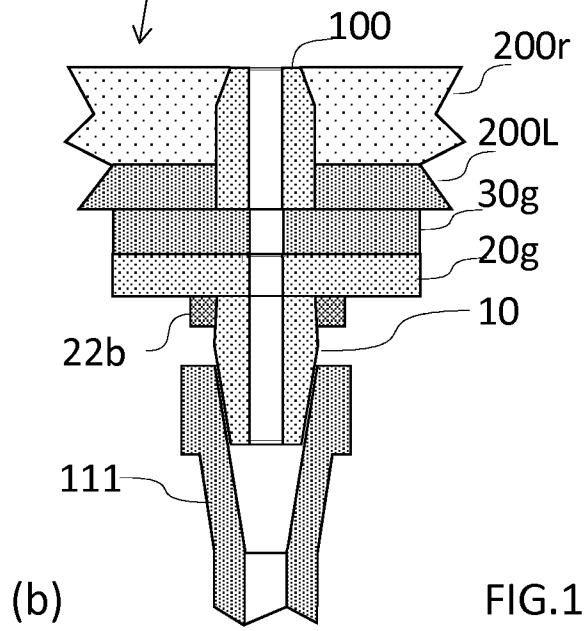
100
200r
200L
30g
20g
10
22b
111
(b)

FIG.1

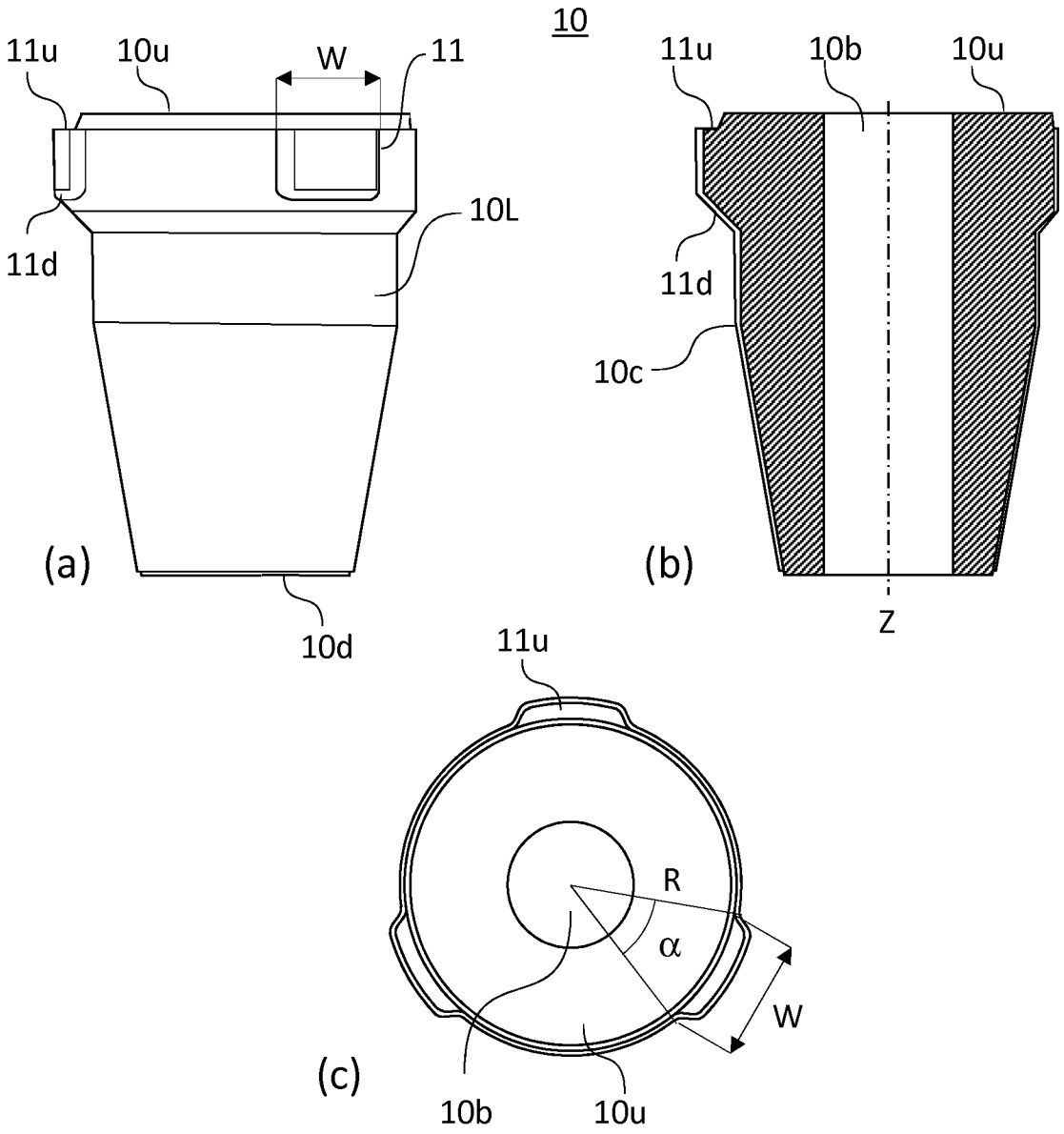
10
11u
10u
W
11
10L
11d
(a)
10d
11u
10b
10u
11d
10c
(b)
Z
11u
R
α
W
(c)
10b
10u

FIG.2

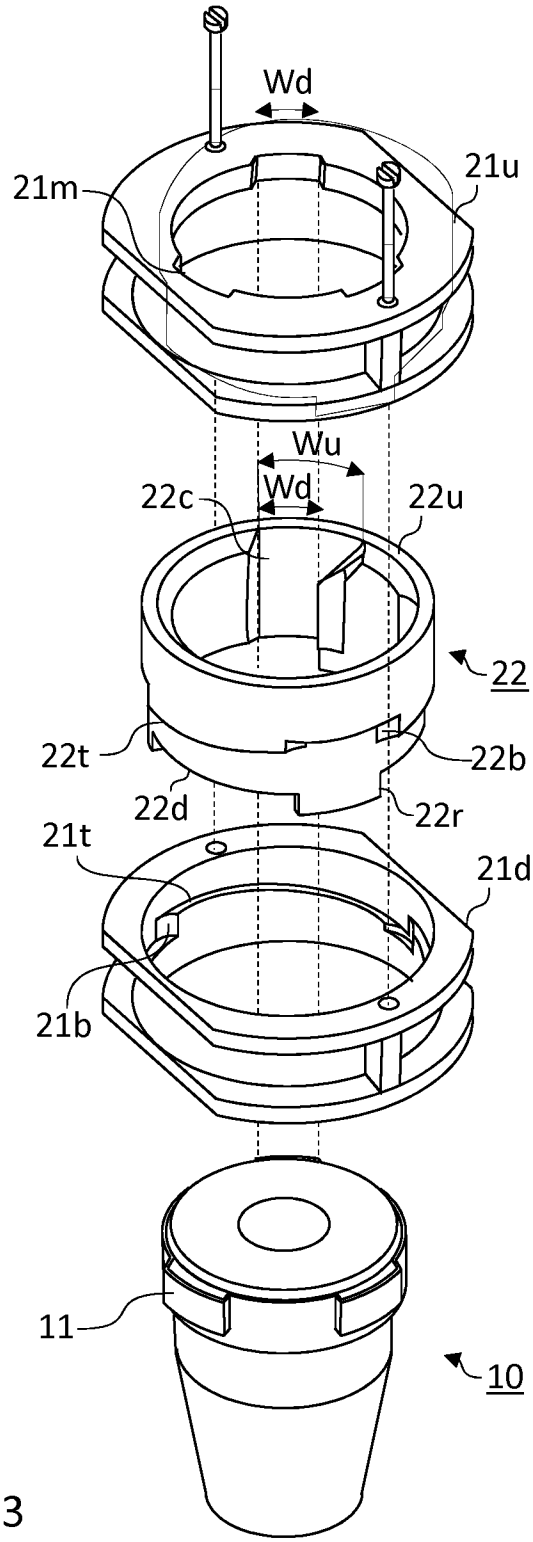

FIG.3

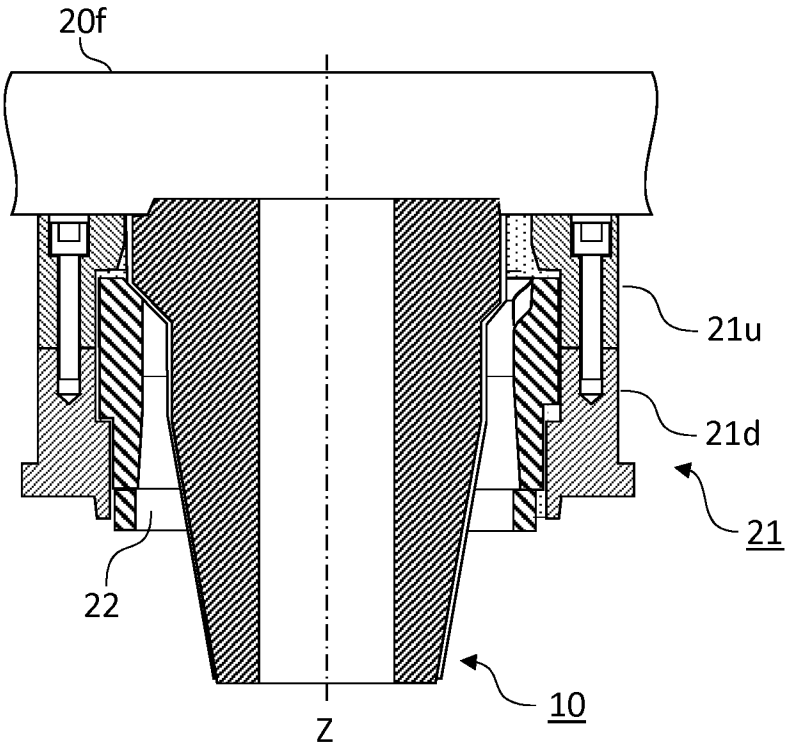

FIG.4

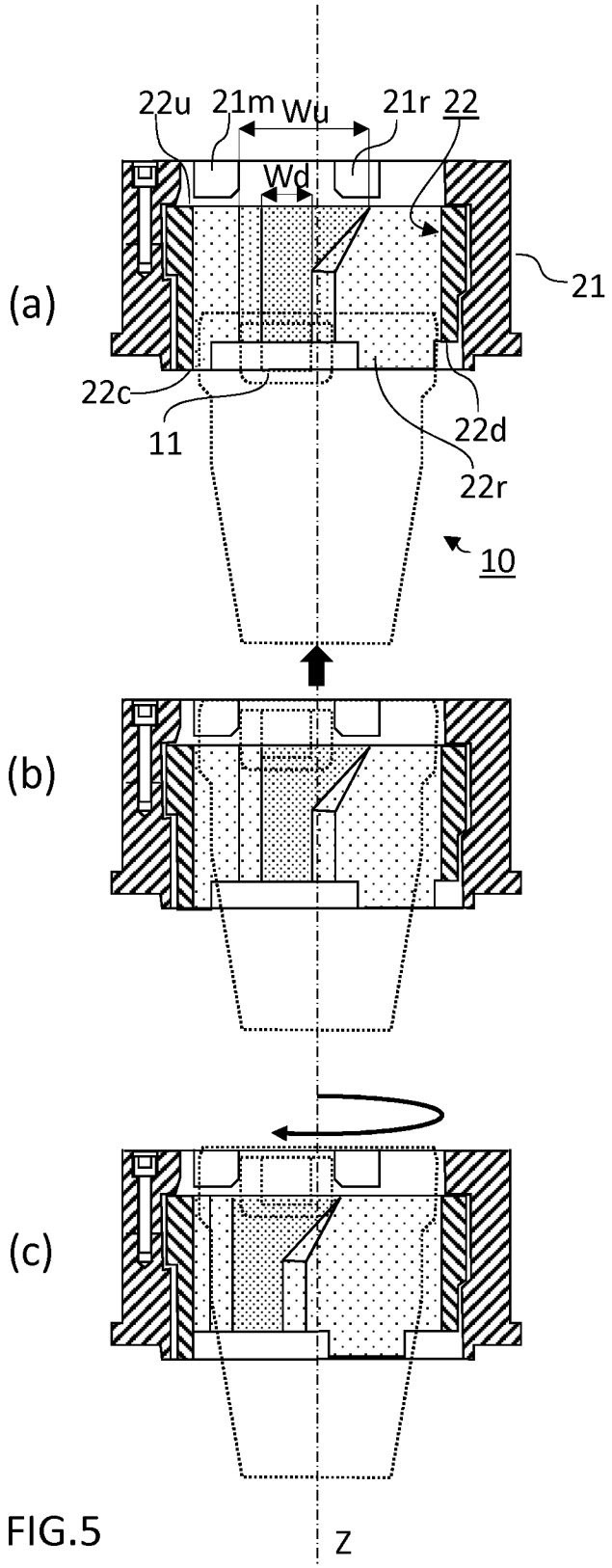

FIG.5

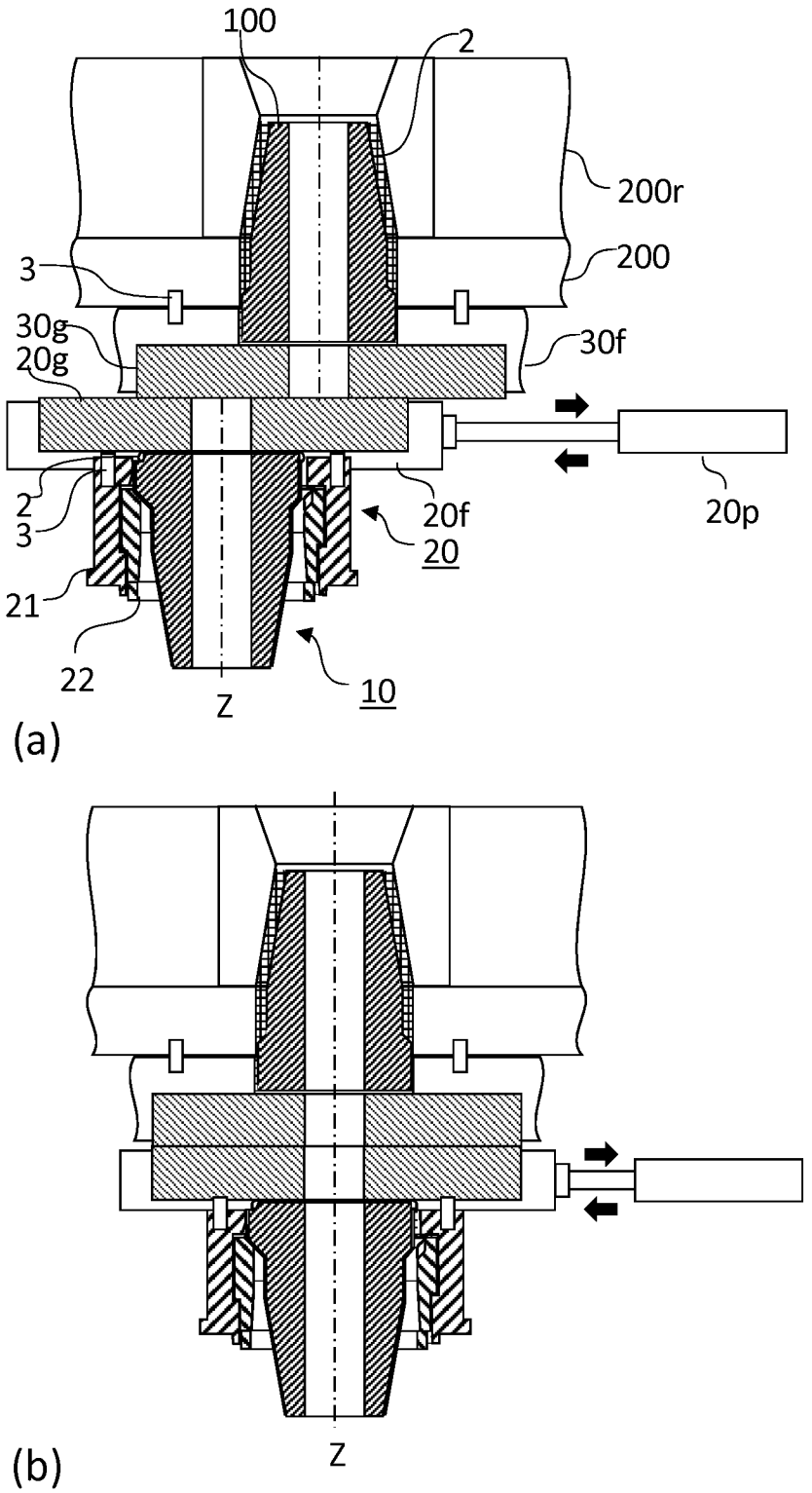

FIG.6

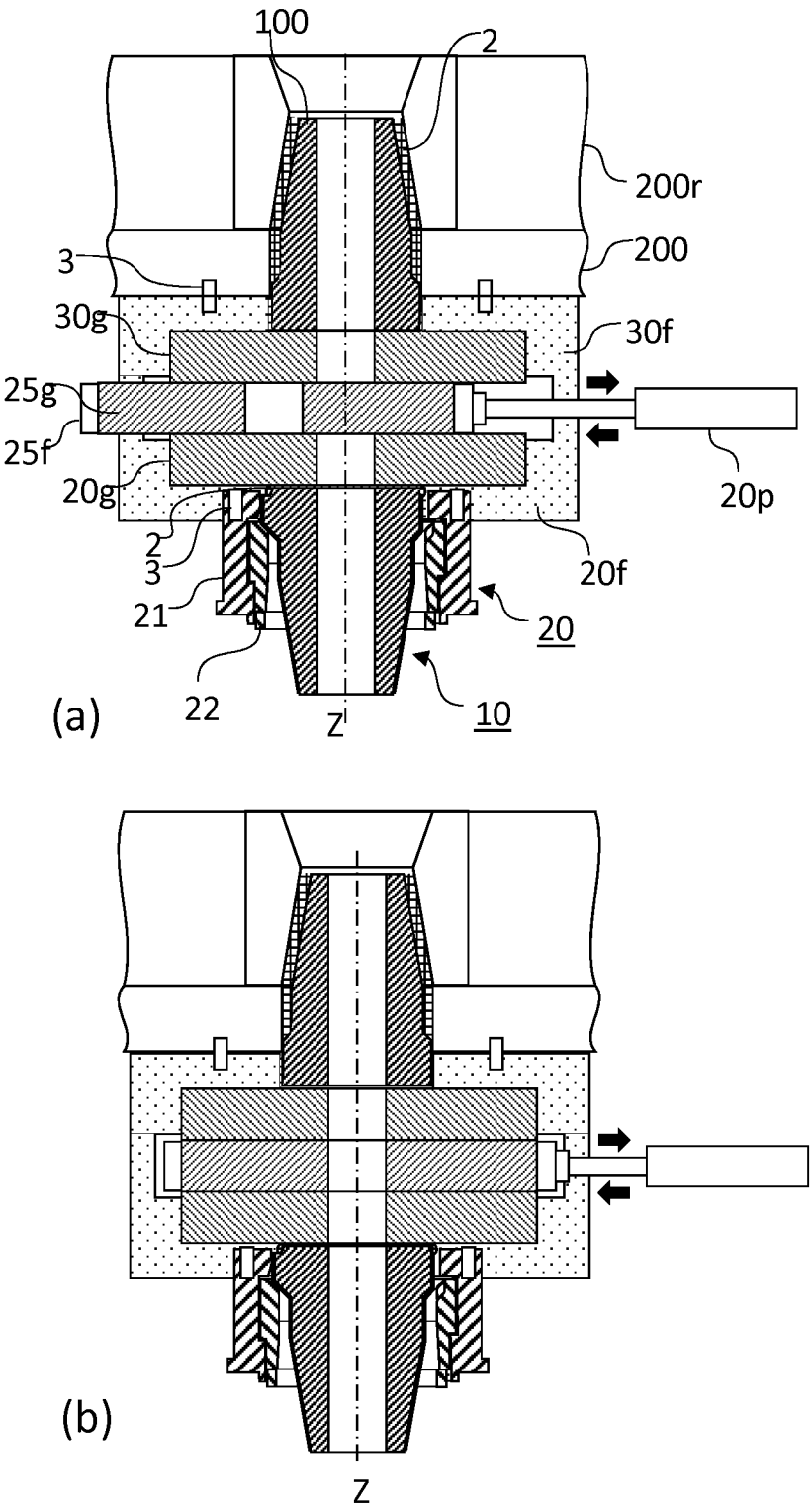

FIG.7