United States Patent [19]

Ahmann

[11] **3,806,219**

[45] **Apr. 23, 1974**

[54] **MULTI-PURPOSE SELF-CONTAINED PORTABLE VOTING BOOTH**

[75] Inventor: **John E. Ahmann,** Napa, Calif.

[73] Assignee: **Computer Election Systems, Inc.,** Berkeley, Calif.

[22] Filed: **July 28, 1972**

[21] Appl. No.: **275,912**

[52] **U.S. Cl.** **312/223,** 312/244, 312/258

[51] **Int. Cl.** **A47b 43/00,** E04b 1/346

[58] **Field of Search** 312/223, 257, 258, 239; 52/64, 244; 248/188

[56] **References Cited**

UNITED STATES PATENTS

3,620,587	11/1971	Ahmann	312/223
2,677,588	5/1954	Couse	312/258
3,389,947	6/1968	Kelly et al.	312/258
3,650,589	3/1972	Linger	312/231
1,529,982	3/1925	Bunzli	312/231
2,798,451	7/1957	Hund	248/166 X
1,723,216	8/1929	Stam	248/159 UX
2,991,830	7/1961	Abel	248/188.6 X
3,000,683	9/1961	McNeary	312/244 X
3,476,456	11/1969	Canavan	312/231
3,031,247	4/1962	Schieve	312/256
3,208,409	9/1945	Gale	312/256
3,245,644	4/1966	Kozel	248/188.6 X

Primary Examiner—Paul R. Gilliam

[57] **ABSTRACT**

A portable multi-purpose self-contained voting booth which may be collapsed and enclosed entirely within a compact carrying case. Extensible and retractable foldable leg structures are storable within the carrying case, which when extended permit positioning of the booth at any desired location. The leg structures are positionable when extended in improved leg receiving wells provided in the carrying case. The booth includes selectively positionable side wall privacy panels and a light source, plus improved supporting means for permitting use of a punch card type voting device therewith which is storable therein and accessible when the booth is erected. Additionally, the booth is provided with movable retractable shelf structure enclosable within the case which is selectively positionable to extend across the case to provide a supporting surface for use when paper write-in ballots or a simplified punch card type voting device is to be employed.

13 Claims, 11 Drawing Figures

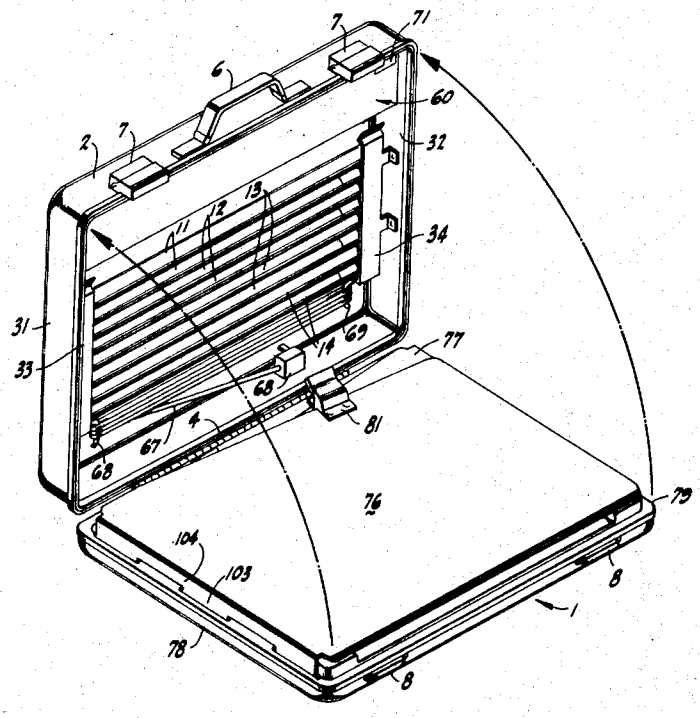

FIG-2

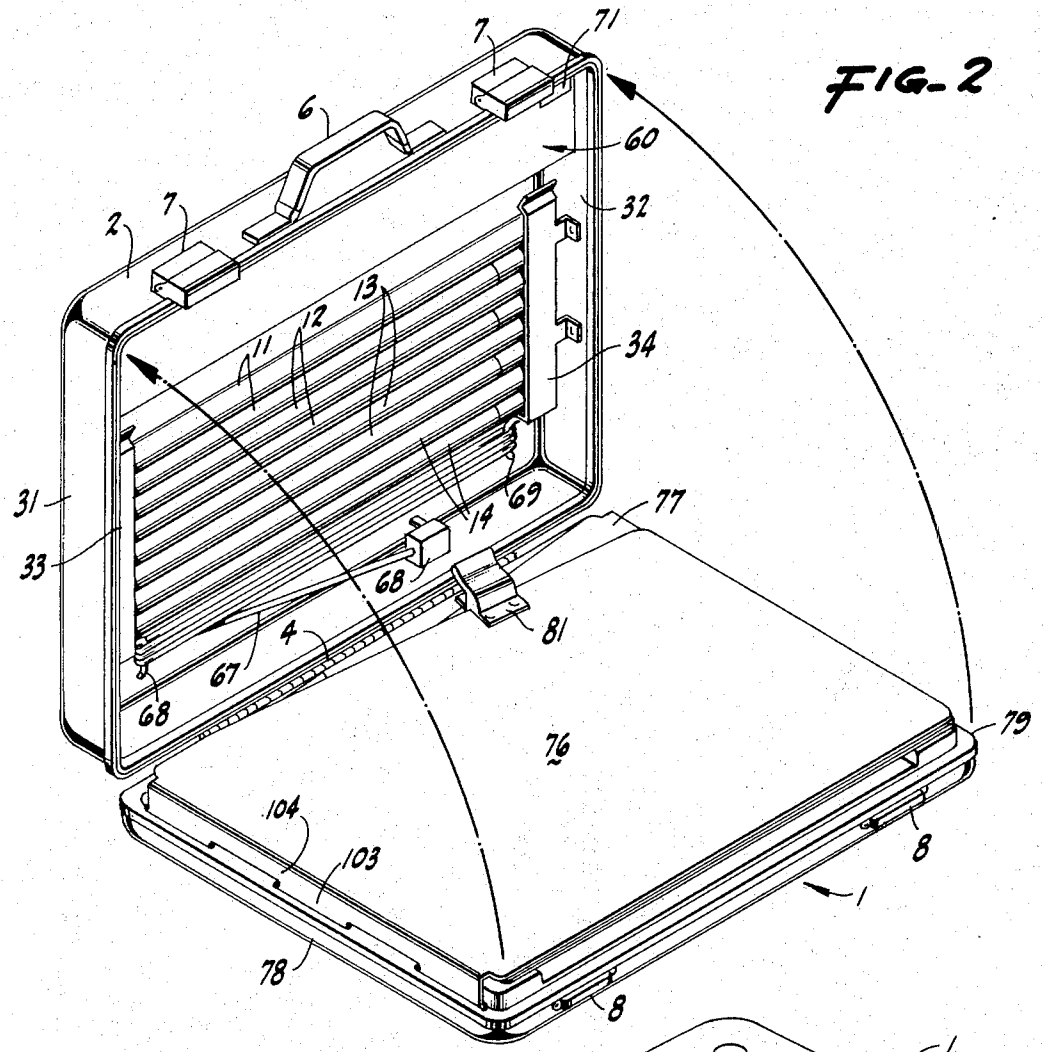
7
71
6
60
2
7
32
13
12
11
34
31
14
69
77
33
68
81
4
67
68
76
79
104
103
8
1
78
8

FIG-1

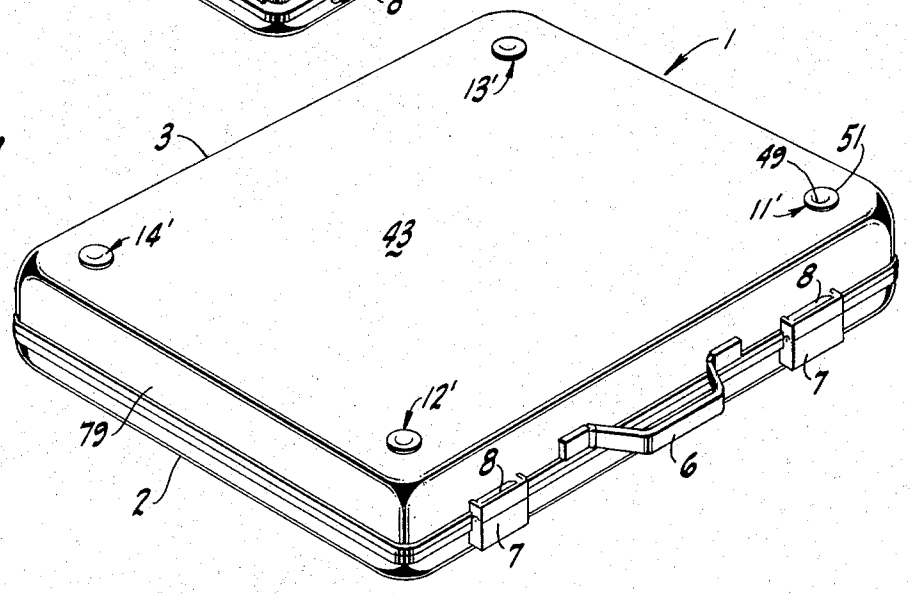
1
13'
3
51
49
11'
14'
43
8
7
12'
79
6
2
8
7

FIG. 3

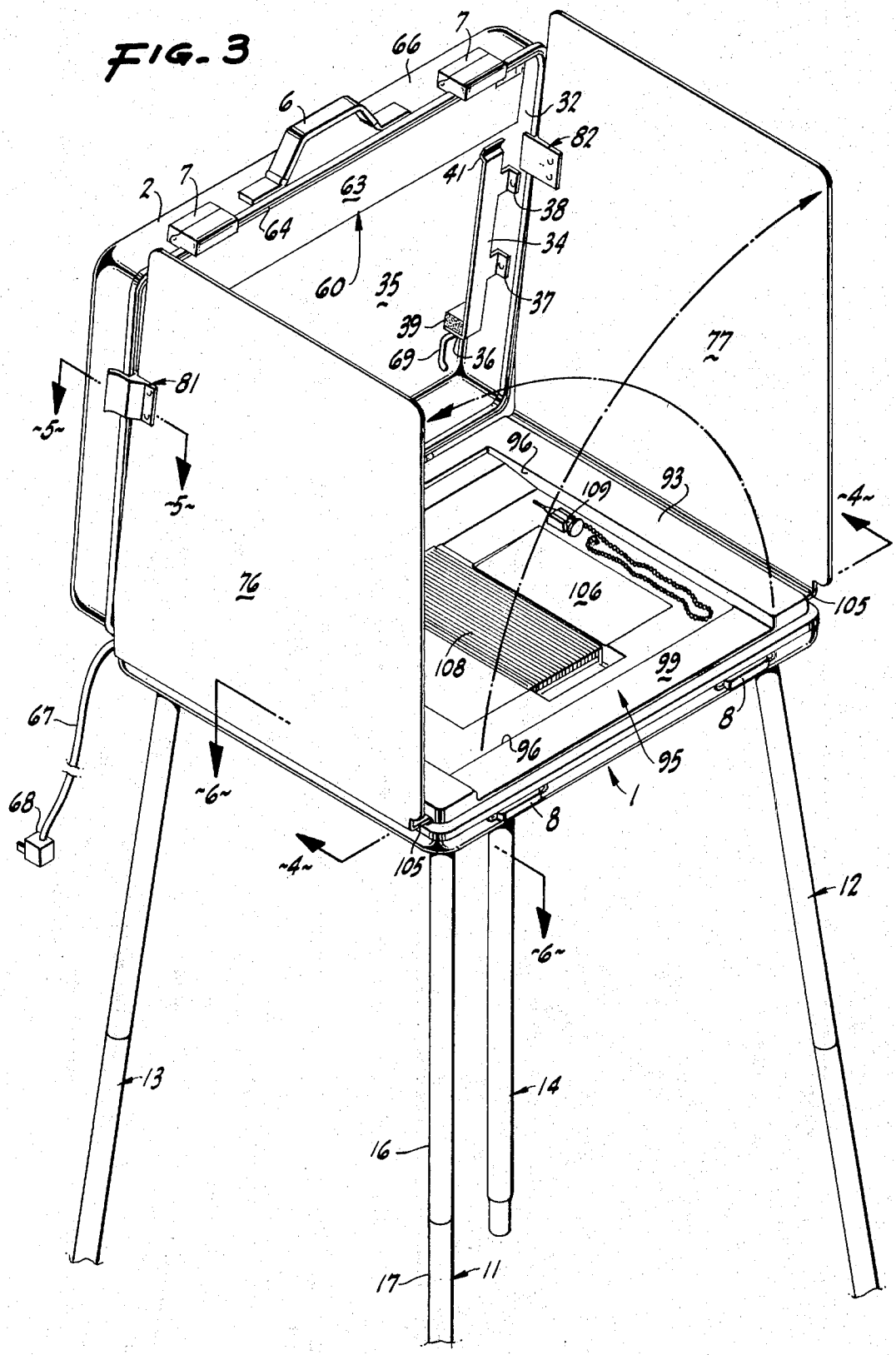
7
66
6
32
82
2
7
41
63
38
64
34
60
35
37
39
77
69
36
81
~5~
~5~
96
93
109
~4~
76
106
105
108
99
67
8
96
95
~6~
1
68
8
~4~
105
12
~6~
13
14
16
17
11

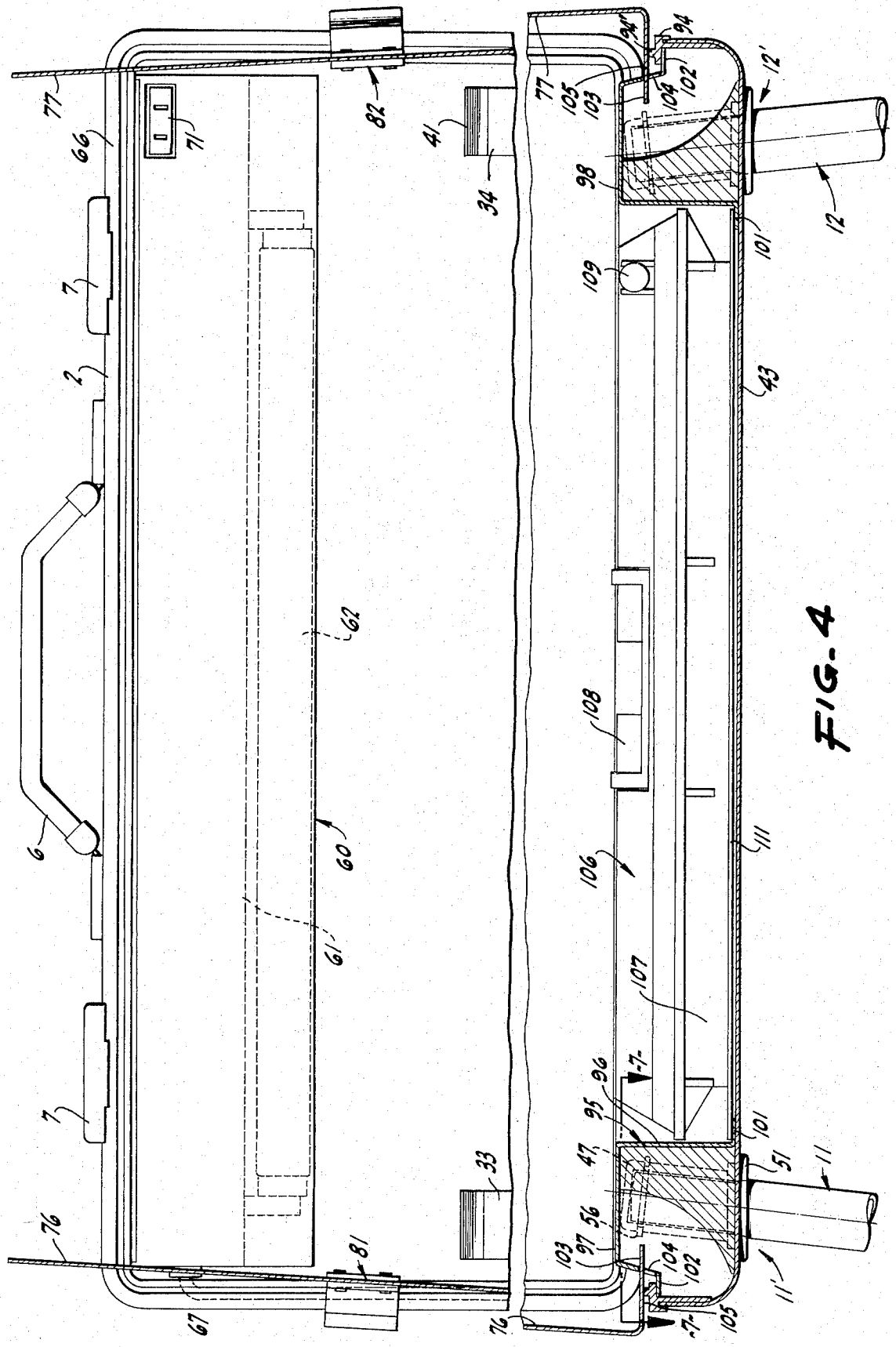
77
66
71
82
41
34
77
105
103
104
102
94'
94
12'
98
12
101
109
43
7
2
62
108
6
60
106
111
61
107
7
96
95
47
101
51
11
33
56
97
103
104
102
11'
76
81
67
76
105

FIG. 4

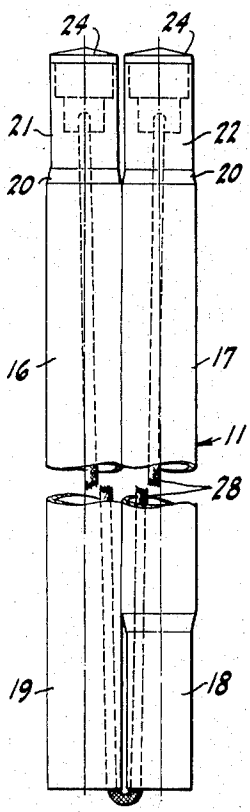

FIG. 9

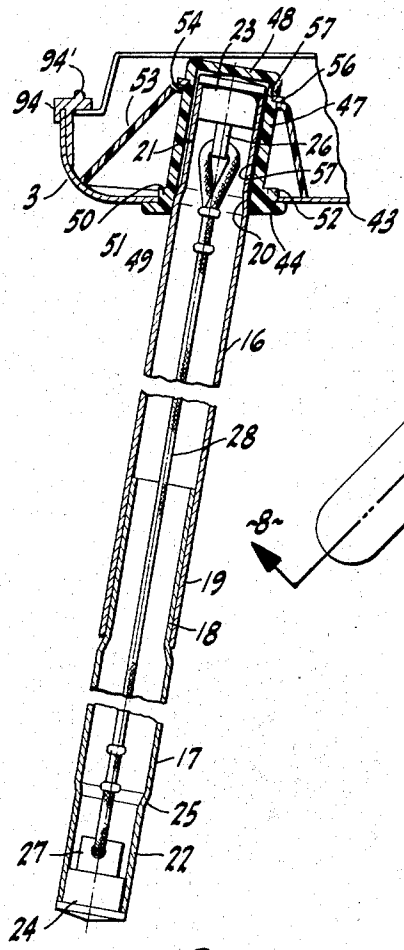

FIG. 8

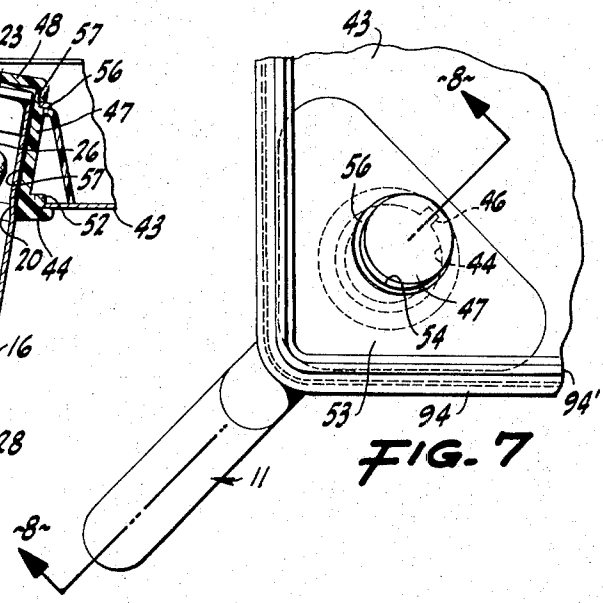

FIG. 7

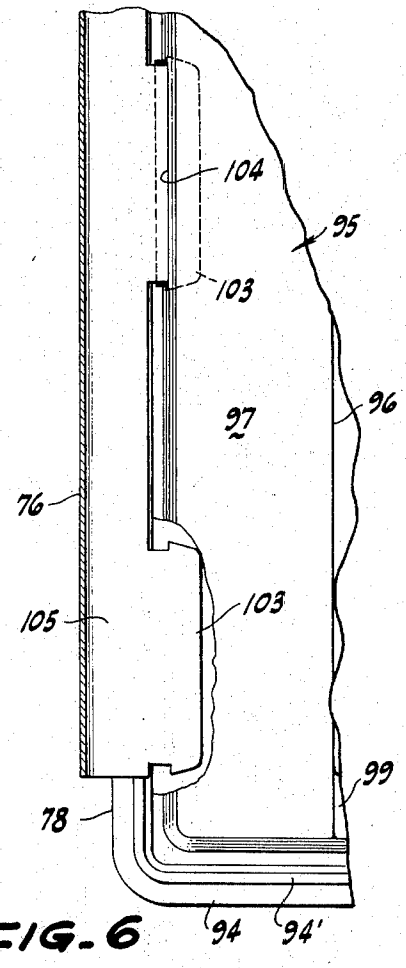

FIG. 6

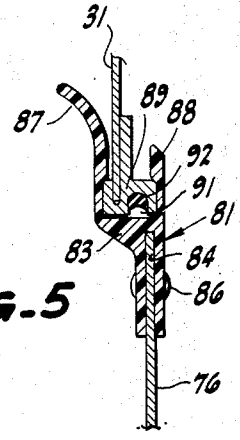

FIG. 5

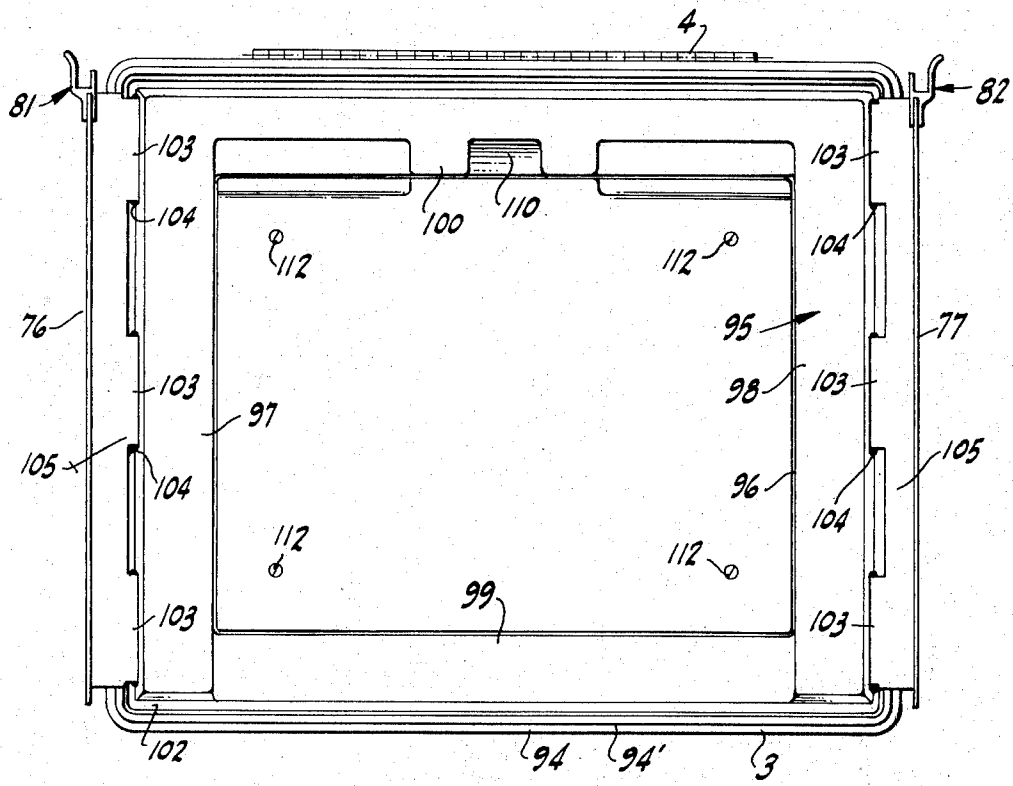
4
81
82
103
104
100
110
112
112
103
104
76
95
77
103
98
103
97
105
105
104
96
104
112
112
99
103
103
102
94
94'
3

FIG-11

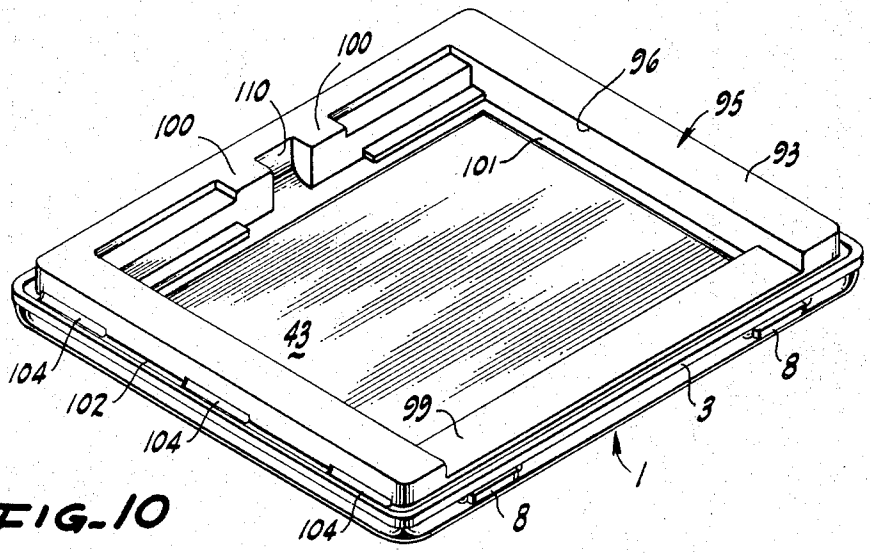
100
110
100
96
95
93
101
43
104
102
104
99
3
8
1
104
8

FIG-10

MULTI-PURPOSE SELF-CONTAINED PORTABLE VOTING BOOTH

BACKGROUND OF THE INVENTION

Field of the Invention

This invention relates to the field of voting booths useable during elections. More particularly, this invention realtes to the field of self-contaned multi-purpose portable voting booths, all components of which are receivable within a compact carrying case for ease of storage and handling. Still more particularly, this invention relates to the field of multi-purpose voting booths useable in elections irrespective of the particular type of ballot to be employed in a given election.

Description of the Prior Art

So far as is known, a voting booth incorporating all the characteristics and improved features disclosed herein has not been known or used heretofore. While applicant's U.S. Pat. No. 3,620,587 "Portable Self-Contained Voting Booth" dated Nov. 16, 1971, assigned to Computer Election Systems, Inc., discloses and claims an improved portable self-contained voting booth, the multi-purpose voting booth of the present application incorporates therein improved features not disclosed in said patent. For example, the present invention incorporates therein modified extensible and retractable leg structures and means for storing the same in retracted position, as well as modified means for providing a selectively positionable shelf structure which adapts the voting booth for use in conjunction with various types of voting systems, including conventional paper type write-in ballots.

In addition to applicant's said prior patent, retractable voting booths of the type known heretofore are illustrated in the following exemplary U.S. Pats: Kelley et al., No. 3,389,947 dated June 25, 1968; and Crossland et al, No. 3,333,766 dated Aug. 1, 1967. However, neither the exemplary patents noted nor applicant's prior patent disclose the novel features emphasized hereinafter.

So far as is known, prior attempts which have been made to devise effective portable voting booths, with the exception of applicant's own prior patented construction, have generally been directed to utilization with only one type of voting system, such as punch card type ballot voting systems, or write-in type ballot voting systems. Such restricted capability makes such known prior portable booths limited in utility and adaptability for voting purposes.

Furthermore, so far as is known, a portable and lightweight voting booth structure of the particular type disclosed herein, which is specifically designed for use with punch card type ballots, write-in type ballots, and other types of presently known ballot systems commonly employed in elections, has not been known heretofore. More specifically, so far as is known, an entirely self-contained multi-purpose voting booth, useable with various type ballot systems, having retractable and storable leg structures, and movable and retractable shelf structure selectively positionable to extend across a base section of the carrying case of the voting booth, as disclosed herein, has been unknown heretofore.

SUMMARY OF THE INVENTION

This invention relates generally to an improved voting booth construction, and particularly to a portable multi-purpose self-contained voting booth which is foldable entirely within a compact carrying case so as to be easily handled during transportation to a polling place and for easy storage at predetermined locations, such as at the polling place, between elections. More particularly, this invention relates to a portable multi-purpose voting booth in which all components thereof are integrally connected with or storable within a compact carrying case, and to such a booth which, when erected, is useable with a variety of known ballot systems, such as punch card ballot systems, write-in paper ballot systems, and the like.

The voting booth of this invention includes extensible and retractable foldable leg structures which are integrally connectable with an associated carrying case, and which are storable within the carrying case, so that the booth may be self-supporting when desired, yet which permits the booth to be supported upon another supporting surface when use of the leg structures is not required or permitted at a particular polling place.

The carrying case of the subject booth includes two hingedly interconnected sections which define a base section and a rear wall section of the voting booth when erected, as well as two selectively extensible and retractable side wall panels which are positionable within the carrying case when retracted and which provide privacy panels when the case is opened and the booth is erected.

Movable shelf stucture is provided in conjunction with one of the case sections for selective movement between a retracted or inaccessible position and an operative or selectively oriented position extending across a portion of the carrying case when the booth is erected to adapt the booth to accommodate a write-in ballot system or a particular type of punch card type ballot system as described hereinafter. Additionally, the booth includes base support means upon which a known type of punch card ballot vote registering device is utilizable. As a result, the voting booth of this invention is useable by governmental entities having diverse types of voting systems presently in effect in their jursidictions.

Furthermore, this invention relates to improved leg structures and well receiving means for such leg structures when the same are extended for supporting the voting booth in an operative position for use at a polling place.

From the foregoing, it should be understood that objects of this invention include the provision of an improved multi-purpose self-contained portable voting booth; the provision of a voting booth which may be entirely enclosed within a compact carrying case for ease of storage and handling; the provision of an improved self-contained voting booth which may be easily transported to a polling place and rapidly and ismply erected thereat and demounted thereat following an election; the provision of an improved voting booth which may be utilizable with various types of voting ballot systems, such as punch card systems and write-in paper ballot systems; the provision of a collapsible voting booth having improved supporting leg structures selectively extensible and retractable relative to the carrying case and storable therein when the booth is demounted and which are integrally connectable therewith in rapid fashion when the booth is erected; and the provision of a multi-purpose portable voting booth hav-

ing improved selectively positionable shelf structure integrally included therein which is movable from a retracted position to an extended position when a write-in type ballot is to be utilized or when a particular type of punch card type vote recording device is to be utilized therewith.

These and other objects of this invention will become apparent from a study of the following description in which reference is directed to the attached drawings.

BRIEF DESCRIPTION OF THE DRAWINGS

FIG. 1 is an isometric view showing the voting booth of this invention collapsed within its carrying case, such case being shown in the inverted position to illustrate details of the underside thereof.

FIG. 2 is an isometric view of the subject voting booth shown in the partially erected condition.

FIG. 3 is an isometric view showing the voting booth in the fully erected condition.

FIG. 4 is a horizontal sectional view through the voting booth taken in the plane of line 4—4 of FIG. 3.

FIG. 5 is a partial vertical sectional view showing the means for maintaining the side wall privacy panels erected and taken in the plane of line 5—5 of FIG. 3.

FIG. 6 is a partial horizontal sectional view taken in the plane of line 6—6 of FIG. 3 and illustrating details of the hinge means incorporated into the side wall privacy panels.

FIG. 7 is a partial horizontal sectional view taken in the plane of line 7—7 of FIG. 4 and illustrating details of the leg receiving wells in which the extensible leg structures are selectively positionable.

FIG. 8 is a generally vertical sectional view taken in the plane of line 8—8 of FIG. 7 and illustrating details of construction of a leg structure when extended.

FIG. 9 is a plan view of a leg structure showing the same in the folded and retracted position ready for storage within the carrying case of the voting booth.

FIG. 10 is an isometric view illustrating internal details of the base structure received within the base section of the voting booth carrying case with the selectively positionable shelf structure and associated punch care vote recording device removed therefrom for clarity of ilustration.

FIG. 11 is a plan view of the base section of the carrying case showing the same in the erected condition and illustrating the selectively positionable shelf structure moved to the position in which the same is adapted to support write-in paper ballots or a particular type of vote recording device suitable for use with punch card type ballots.

DESCRIPTION OF THE PREFERRED EMBODIMENT

The voting booth construction of this invention has been designed so as to be completely self-contained in a compact carrying case having two principal sections which define integral portions of the voting booth when the same is erected for use at a polling place. In that regard, the voting booth of this invention has further been designed to be useable with various types of voting systems presently used by diverse governmental entities, such as voting systems employing write-in type ballots, as well as more modern systems utilizing punch card type ballots and the like intended to be counted automatically in computers programmed to read the ballot information punched in the ballots. To that end, the present invention includes selectively positionable shelf means therein for readily and rapidly adapting the same to accommodate write-in type ballots as well as to accommodate automatic punch card type vote registering devices which receive therein punch card type ballots.

The particular type of ballot employed and the voting device utilized in conjunction with such ballots form no part of this invention. However, by way of background information, several prior patents illustrate vote registering devices utilizing punch card type ballots which are effectively incorporated into this subject voting booth to provide an operative combination. Harris U.S. Pat. No. 3,240,409 dated March 15, 1966, and Harris U.S. Pat. No. 3,201,038 dated Aug. 17, 1965, show punch card type vote registering devices which are capable of handling a substantial slate of candidates and election questions. Abissi U.S. Pat. No. 2,949,292 dated Aug. 16, 1960, and Laframboise et al. U.S. Pat. No. 3,007,620 dated Nov. 7, 1961 show somewhat simpler and more compact vote registering devices which are also adapted to accommodate punch card type ballots therein.

The voting booth construction of this invention is adapted to utilize the voting devices of any of the patents noted above, as well as to accommodate more conventional writein type paper ballot systems in which the voter utilizes a marking pen, an ink stamp, or the like to register his choice on the face of a paper ballot. The present invention thus is incorporated into a versatile, multi-purpose voting booth which is efficient, lightweight, compact and attractive from both the standpoint of cost and appearance, and which may be readily and easily transported to and erected and demounted at a polling place by unskilled persons.

The voting booth of this invention has been designed to be self-supporting on leg structures provided integrally therewith so that a preson voting at the same may stand erect during a voting operation. However, it has the further advantage of being useable when the leg structures are stored within the carrying case by positioning the same upon some other supporting surface. Thus, for example, the subject voting booth may be transported into hospitals and placed on a bed, bedside or other table, for use by patients who are confined to beds or wheel-chairs. Thus, utilization of mail-in absentee paper type write-in ballots by patients and the like may be obviated in those jurisdictions where punch card type voting systems have been adopted by utilizing the subject voting booth. Utilization of the booth without employing its supporting leg structures in their extended position in other environments also is contemplated.

Because the booth preferably is provided with an integral light source, the self-contained and self-sufficient nature thereof is further enhanced. Additionally, because of the compact nature of the booth when closed within its carrying case, a governmental entity can realize substantial monetary savings annually in the cost of storage and transportation of voting booth units. Additionally, the ease with which the subject voting booth may be transported enhances the desirability of its use at various locations within a given jurisdiction so that the same may be moved from one polling place to another as required during elections of various types held at different times of the year.

Furthermore, the carrying case for the voting booth has sufficient space on the interior thereof so that an integral vote registering device for punch card ballot systems may be retained in the booth during storage; also, additional election related equipment, such as precinct flags and the like, may be stored in the voting booth when the same is not in use.

Additionally, when a punch card type voting device is employed with the voting booth construction illustrated herein, the small portions punched from the punch card ballots (chad) may be collected directly by the voting device for disposal following the election. Thus, a neat polling place is insured and fouling of punch card type vote registering devices is obviated.

Also, because voting booths normally are used only periodically, for example once or twice a year, by a particular governmental entity, the possibility of damage to the vote registering components thereof is obviated during storage because of the sturdy nature of the carrying case in which all of the booth components are enclosed when the booth is not in use. Thus, maintenance requirements are minimal and preparation of the booth for use is simple and may be rapidly and inexpensively effected.

With the foregoing preliminary considerations in mind, reference is directed to the drawings for an illustration of the details of construction of a preferred embodiment of the subject invention.

Referring first to FIG. 1, the voting booth is shown in the fully collapsed or demounted condition in which all components thereof are enclosed within a sturdy, compact carrying case generally designated 1. The carrying case is shown in FIG. 1 in the inverted position to illustrate details of the leg receiving means on the undersurface of the base thereof which will be discussed in greater detail hereinafter. It should be understood that the upper surface of the carrying case may be formed with any type of identifying indicia required or desired. Additionally, both the undersurface of the carrying case shown in FIG. 1 and the upper surface thereof which is not specifically illustrated may be formed with any strengthening construction required, such as elongated ribs extending thereacross.

While the carrying case dimensions will be dictated largely by the erected size of a particular booth required by a particular governmental entity, and while this invention may be incorporated into voting booths of varying sizes dictated by particular needs, in the commercial embodiment thereof illustrated in FIG. 1, the booth is incorporated into a compact carrying case construction which is approximately 22 ½ inches wide by 19 inches deep by four inches thick. The cubic displacement of such a booth when collapsed and enclosed within a carrying case is approximately one cubic foot which permits easy storage of large quantities of such booths in limited space. When fully erected the illustrated booth is approximately 60 inches high by 20 inches deep by 22 ½ inches wide at the top and 28 inches by 24 inches at the bottom defined by the extensible legs thereof. The working surface defined by the vote recording device or the selectively positionable shelf structure is approximately 39 inches from the floor so as to be readily accessible by a person standing in front of an erected booth.

The weight of a ready to use booth will vary depending upon the type of ballot system to be utilized by a particular entity and such weight will generally lie within the range of eight to 20 pounds. As a result, the booth is easily handled by one person, including female precinct workers.

It has been found desirable to form the carrying case from a suitable sturdy material, such as lightweight aluminum or a rigid strong plastic material, capable of withstanding rough handling during repeated transportation or storage thereof. The internal components of the booth to be described may be formed from a lightweight metal, a rigid lightweight plastic, wood fiber, or other sturdy lightweight material.

The carrying case 1 includes two cooperable sections 2 and 3 hingedly and integrally interconnected with each other in known fashion by means of a hinge construction 4 interposed therebetween as seen in FIG. 2. A carrying handle 6 is riveted, welded or otherwise secured to case section 2 in known fashion. Also, suitable latch means defined by opposed releasable latch members 7 on case section 2 and latch brackets 8 on case section 3 are provided to permit the case sections to be positively secured together for transportation and storage. The latch means shown preferably are spring loaded to remain in the latched position shown in FIG. 1 to preclude inadvertent opening of the carrying case.

When the carrying case is opened during erection of the booth, case section 2 is positioned to extend generally at right angles to case section 3 with section 2 forming the rear wall of the voting booth and case section 3 forming the base thereof. In that regard, as seen in FIG. 1, case section 3 generally forms and defines the undersruface of the booth while case section 2 defines the upper surface thereof when the case is positioned to be erected.

An important feature of this invention which imparts flexibility to utilization of the subject voting booth is the inclusion therein of supporting means defined by a plurality of extensible and retractable foldable leg structures which impart self-supporting capability to the booth.

Thus, the leg structures do not interfere with handling of the carrying case during transportation and storage thereof and further are positioned within the case so as to prevent their loss or damage during such transportation and storage. In that latter regard, when thus positiond, the leg structures do not interfere with normal operation and utilization of the voting booth if the legs are not required at a particular polling place, such as in a hospital or the like as noted previously.

As seen in FIGS. 2 and 3, the present embodiment includes four retractable leg structures designated 11, 12, 13 and 14 respectively, with leg structures 11 and 12 when extended and positioned in operative orientation with the carrying case being located at the front thereof while leg structures 13 and 14 are positioned at the rear thereof. Each such leg structure is positionable adjacent a corner of the case section 3 and is removably positioned in leg receiving means provided therefor as will be described.

All of the leg structures preferably are identical in construction and only one such leg structure will be described in detail, with similar reference numerals being used in the drawings to identify similar components of the other leg structures. It will be understood from FIGS. 1 and 3 that each leg structure is selectively retractable relative to case section 3 and is positionable within case section 2 for storage and transportation. 9

Referring to FIGS. 8 and 9, considered with FIGS. 2 and 3, it will be understood that each extensible leg structure, as exemplified by leg structure 11, includes at least two relatively movable hollow tubular leg sections 16 and 17 (of aluminum or like material) which are of substantially equal length and of substantially identical construction, except that leg section 17 is formed at one end with a reduced diameter portion 18 which is telescopically receivable within an end section 19 of the cooperable leg section 16.

The leg sections 16 and 17 are selectively interfittable in telescopic fashion as seen in FIGS. 3 and 8 but are slidably separable from each other to permit folding of the leg structure to half its normal length as seen in FIG. 9. Each leg section is formed with a reduced diameter cylindrical outer end, designated 21 and 22 respectively, designed to interfit with leg positioning and receiving means carried by the case section 3 as will be described. Each end has an enlarged tapered annular shoulder 20 interposed between the reduced end and the main portion of the leg section. In that regard, it will be understood that leg structure 11 is identically contoured at each of the reduced ends 21 and 22 so that either of such ends is positionable within the leg positioning and receiving means to be described.

Additionally, each end 21 and 22 is further defined by a non-metallic end closure cap 23 and 24 respectively, each of which as seen in FIG. 8 has an apertured flange 26 and 27 projecting therefrom into the associated hollow leg section. Interposed between and connected with the flanges 26 and 27 is an elongated elastic cord 28 which is secured to the flanges by looping and tying the same as seen in FIG. 8. Such elastic cord is formed of any suitable material and draws the end caps 23 and 24 toward each other to securely maintain the leg sections 16 and 17 in telescopic interengagement as seen in FIG. 8. However, the leg sections 16 and 17 may be drawn away from each other by stretching cord 28 and the leg sections thus may be disengaged and folded to the parallel side-by-side relationship shown in FIG. 9 for storage within the carrying case when use thereof is not required.

In that regard, referring to FIGS. 2 and 3, case section 2 is generally hollow and has provided therein along opposite side walls 31 and 32 resilient leg retaining clips 33 and 34 respectively. Such clips each include, referring to clip 34 in FIG. 3, an inturned bottom flange 36 positioned to contact the inner surface of the main wall 35 of case section 2. Flange 36 is riveted to wall 35 and two intermediate outwardly turned flanges 37 and 38 of clip 34 are riveted to the side wall 32 of the case section 2.

A cushioning pad 39 of any suitable sponge like material is bonded to the bottom flange 36 to provide a supporting surface for the leg structures when the same are stored within the case. At its upper free end, the clip is provided with an outwardly turned lip to facilitate insertion of leg structures between the clip and the inner surface of the case section and to provide a retaining detent for engaging the stored leg structures.

The other clip 33 is similarly constructed and is secured to its associated side wall 31 and main wall 35 of case section 2.

As seen in FIG. 2, when the respective leg structures have their two sections disengaged and folded in parallel relationship, all four such leg structures may be moved longitudinally behind the spaced opposed retaining clips 33 and 34 to be held securely in place in case section 2. The arrangement of the respective leg structures in the case section is a matter of choice because, as noted previously, all such leg sections are interchangeably useable to support the voting booth when the same is erected.

When the leg structures are removed from the stored position in case section 2 and operatively extended and interfitted, the same are adapted to be selectively engaged with case section 3 as seen in FIG. 8. In that regard, each of the leg structures extends at approximately 100° relative to the bottom plane of case section 3. Thus, the lower end caps of the respective leg structures are widely spaced from each other as seen in FIG. 3 so that stability is insured when the voting booth is fully erected and supported by the leg structures.

It should be understood, as noted from FIG. 4, that case section 3 which forms the base of the voting booth when erected also is formed as a hollow metal shell. The before noted means for receiving the leg structures therein is provided in conjunction with the bottom wall of such case section 3, such wall being generally designated 43 in FIGS. 1 and 4.

Four leg structure positioning and receiving means, designated respectively 11', 12', 13' and 14' to correspond with the identification of the leg structures to be received therein, are provided adjacent the respective corners of the generally rectangular bottom wall 43 of case section 3. Because each of such receiving means is preferably identical in construction, only one such means will be described in detail and reference is directed to FIGS. 7 and 8 in conjunction therewith. In that regard, the wall 43 has a hole 44 formed therethrough adjacent a corner thereof to accept a leg receiving means therein. Such hole is generally circular, except the same is provided with a key way 46 at one edge thereof as seen in FIG. 7.

Slidably received within hole 44 is an inverted cup 47 of rigid plastic having a closed upper end 48 and an open lower end 49, the latter being defined by an enlarged flange 51 of greater diameter than hole 44 as seen in FIG. 1 and 8. Flange 51 limits the extent to which the cup can be inserted through hole 44 and such flange includes an integral shoulder 50 having a narrow key 52 receivable within key way 46 mentioned previously to prevent rotation of the cup when the same is positioned as seen in FIG. 8. In that connection, it will be understood that access to the cup from within case section 3 is possible during manufacture of the booth and prior to the positioning of internal components thereover as will be described.

To prevent reverse movement of cup 47 out of engagement with bottom wall 43, structure is provided for engagement therewith to maintain the same in the operative orientation shown in FIG. 8. Such structure comprises a generally triangular hollow retainer member 53 having an aperture 54 in the generally flat upper surface thereof as seen in FIGS. 7 and 8. Such aperture is of a diameter slightly larger than the outer diameter of the inverted cup 47 so that retainer 53 may be moved longitudinally over the cup. A split ring 56 is received in an annular groove 57 formed in the cup adjacent its upper closed end 48 and such split ring is interposed between the cup and retainer 53 to prevent inadvertent separation thereof.

Thus, retainer 53 acts as a supporting and retaining strut to prevent separation of the cup from case section

3 during all conditions of use of the voting booth. Such engagement is seucre so that repeated insertion and removal of a leg structure from engagement with the cup is ineffective to dislodge the cup from its operative position.

As noted from FIG. 7, each retainer 53 in plan view conforms generally to the triangular contour of the corner of the case section 3 in which the same is positioned to insure firm retention of the leg receiving means of which the same forms a part within such case section.

In that regard, cup 47 is hollow and is provided with an internal generally cylindrical bore 57 terminating at the closed end 48 thereof. The diameter of such bore is slightly greater than the diameter of the reduced ends 21 and 22 of a leg structure so that either of such reduced ends may be easily slidably inserted into the cup until the tapered shoulder 20 thereof contacts the flange 51 of the cup. That is, the length of bore 57 is slightly greater than the length of the reduced end sections 21 and 22 so that the aforementioned shoulder 20 may be wedged into engagement with the cup at its outer end 49 as seen in FIG. 8. Thus, a leg structure may be securely wedged in slip proof fashion with the leg receiving means without fear of the same becoming inadvertently disengaged during use of the voting booth when erected. However, such wedging action does not preclude ease of disassembly when it is desired to fold up the voting booth for storage.

Thus, selectively extensible and retractable leg structures are provided which when extended as seen in FIG. 8 define integral supporting means for the carrying case when the booth is erected and which are foldable and retractable for ease of storage in the carrying case as noted.

It has been found desirable to include in the subject voting booth construction a light source to illuminate the work surface upon which a voter is casting his ballot. As seen in FIGS. 2, 3 and 4, such light source is generally designated 60 and includes a fluorescent light fixture 61 (FIG. 4) including a fluorescent bulb 62 positioned behind a hingedly mounted light shield 63 pivotally secured by a hinge structure 64 with an end wall 66 of case section 2. The bulb 62 and its supporting fixture 61 are mounted by means of rivets or the like to the case section 2 in the orientation seen depending from end wall 66 thereof.

An electric cord 67 as seen in FIG. 4 is operatively connected with the light source and the same terminates in a male plug 68 intended to be inserted in any conventional power outlet. In that connection, the aforementioned leg structure retaining clips 33 and 34 as seen in FIG. 2 have bent hooks 68 and 69 depending therefrom around which the electric cord 67 may be wound and stored when the booth is collapsed for nonuse.

Referring to FIG. 4, provided in conjunction with the light fixture 61 is a female electrical auxiliary outlet 71 which is provided with electrical current from cord 67. The auxiliary outlet 71 may be utilized for any purpose requiring supplemental electricity at a polling station.

As best seen from FIGS. 2, 3 and 6, the subject voting booth further includes privacy means which define side walls when the booth is erected. Such means in the embodiment illustrated comprises a pair of cooperable side wall panels 76 and 77 which are hingedly connected with one of the case sections. In the embodiment illustrated, such side wall panels are hingedly connected to the lower case section 3 when the booth is erected adjacent opposite side walls 78 and 79 thereof as will be described. In that connection, such panels are not hingedly connected to the case section directly but are hingedly connected in operative position thereon by intermediate base structure to be described.

Referring to FIGS. 2 and 3, it should be understood that the side wall panels are pivotal from the retracted or folded position shown in FIG. 2 in which they overlie each other to the extended position shown in FIG. 3 in which they extend generally at right angles to each of the case sections 2 and 3.

Preferably, detent means, generally designated 81 and 82 respectively, are provided in conjunction with the side wall panels. Referring to FIG. 5, detent means 81 illustrative of detent means 82 as well, is illustrated. Such detent means comprises a clip 83, formed of suitable flexible plastic material, having a slot 84 along one edge thereof in which an edge margin of panel 76 is received. Such clip is connected by rivets 86, or is otherwise secured, to the panel 76.

At its other end, the clip is provided with spaced arms 87 and 88, the former of which flairs outwardly to facilitate engagement of the clip with a marginal edge 89 of the associated side wall 31 of the case section 2. The arms 87 and 88 are contoured to interfit with the marginal edge of the case section defined by a fitting member 89 to prevent inadvertent separation of the clip from the case section when the same are interengaged as seen in FIG. 5 to maintain the privacy panel in the extended position shown. Thus, panels 76 and 77 not only provide privacy for a voter but also maintain the case sections 2 and 3 in the generally right angled orientation shown in FIG. 3 to maintain the booth erected for use by a voter.

In that connection, it should be understood, referring to FIG. 5, that the fitting member 89 of case section 2 preferably is formed as a separate flange which is crimped or otherwise secured about the periphery of the free margin of the case section 2 to define the outer free margin thereof. Such fitting member 89 is formed with a channel 91 having a sealing strip 92 therein. As seen in FIG. 4, the opposing case section 3 is provided with an upstanding rib 94′ designed to be received within the groove 91 for effecting secure sealing therebetween. Such rib 94′ is formed as part of a peripheral fitting member 94 secured by crimping or the like to the free marginal edge of the lower case section 3.

Also included in case section 3 is base structure which, among other functions, provides means by which the privacy panels 76 and 77 are hingedly mounted to the case section 3 and which also provides means for operatively positioning a punch card type vote registering device, of the type disclosed in detail in the aforementioned Harris patents, within the case section 3. Such base structure also provides positioning means for insuring proper orientation of an extensible and retractable shelf structure which is operatively and selectively positioned within the case and is normally enclosable therein when the booth is folded and the carrying case is closed. Such shelf structure is selectively positionable to extend across the base section 3 of the case to provide a supporting surface which is available for use to support thereon a vote recording device, a paper write-in type ballot, or other materials

when the booth is erected and such shelf structure is in its operative position.

The base structure, as best seen in FIGS. **10** and **11** taken in conjunction with FIGS. **3** and **4**, comprises a one-piece contoured molded plastic or equivalent base panel which is generally rectangular in outline in accordance with the shape of case section **3**. The base panel is designated **95**. Such base panel is molded from any suitable substantially rigid plastic and is formed with a contoured generally rectangular inner periheral recess **96** which permits the selective positioning of a punch card type vote recording device or a shelf structure in a position which extends across the base section of the voting booth in selective fashion, depending upon the type of ballot to be utilized.

The base panel **95** is defined by four integrally connected marginal portions defining opposed side sections **97** and **98** and opposed front and rear sections **99** and **100** of the panel. As perhaps best seen in FIGS. **4** and **10**, the base panel includes an inner peripheral lip **101** which defines the inner margin of the rectangular recess **96** and an outer peripheral lip **102** which defines the outer margin of the base panel.

Referring to FIG. **4**, it will be noted that the inner lip **101** is formed on a lower plane that the peripheral outer lip **102**. In that regard, inner lip **101** rests upon the inner surface of the bottom wall **43** of case section **3** while the outer lip **102** is positioned thereabove to underlie the fitting member **94** secured to the free outer margin of the lower case section **3**.

It should be understood that each of the opposed sections **97, 98, 99** and **100** of the base panel is hollow as seen in FIG. **4** so that the same may accommodate therein the aforementioned leg mounting means **11'**, **12'**, **13'** and **14'** positioned adjacent the resepctive corners of the base section **3**. In that regard, it will be noted that the undersurfaces of the four sections of the base panel **95** contact and are supported by the upper closed ends of the inverted cups **47** which define the leg receiving means as described previously. Thus, such leg receiving means support the upper portions of base panel **95** while the inner peripheral flange **101** thereof supports the bottom portion thereof. Thus, with the arrangement shown, the base panel is securely positioned within the case section **3** and is retained therein by peripheral fitting member **94**.

Referring to FIG. **6** taken in conjunction with FIG. **4**, it will be noted that each of the side wall privacy panels **76** and **77** at its lower margin is provided with a plurality of generally T-shaped hinge tabs **103** which are received in slots **104** formed in the opposed side portions **97** and **98** of the base panel. The tabs **103** are pressable into the slots **104** formed to receive the same and the material from which the base structure and the privacy panels are formed is sufficiently resilient to allow entry of the enlarged tab heads into the smaller size slots until the same are positioned as seen in FIG. **6**. In that regard, it will be noted that the tabs **103** form part of a flange extension **105** which extends generally at right angles to the plane of the respective privacy panels **76** and **77** which permit the panels to move from the extended position seen in FIG. **3** to the retracted overlapping position seen in FIG. **2**.

The hollow depressed interior of the base panel as seen in FIG. **4** defines positioning means adapted to accommodate therein a punch card type vote registering device, generally designated **106** in FIGS. **3** and **4**. Such device comprises an essentially self-contained unit of the type shown in the aforementioned Harris patents. In that regard, such device is provided with an integral base **107** which, as seen in FIG. **4**, conforms to the size and contour of the recess **96** in the base panel **95** and is positionable within the follow confines of the base panel and rests upon the bottom wall **43** of case section **3**. Base **107** supports a ballot supporting structure generally designated **108** and an associated punch stylus **109** chained thereto against loss. The stylus is used to register a vote on a punch card type ballot.

For full details of construction of such a voting device and the mode of operation thereof, reference is directed to the aforementioned Harris patents. It should be understood that such details of construction form no direct part of this invention except with respect to the interrelationship of such a voting device with the base panel and the other structural features of the subject portable voting booth.

Provided in conjunction with the base panel and the voting device selectively positionable within the confines thereof is retractable and extensible shelf structure which is selectively movable and positionable to provide a generally flat planar surface for supporting a paper type ballot, or for supporting a simplified type of punch card type voting device thereon of the type disclosed in the aforementioned Abissi and Laframboise et al. patents.

In that regard, such shelf structure in the embodiment illustrated is formed directly in conjunction with and as integral part of the illustrated voting device **106**. That is, such shelf structure is defined by a generally flat metal or plastic plate **111** which, as seen in FIG. **11**, is maintained in engagement with the undersurface of the base **107** of the voting device **106** by a series of screws **112** passing therethrough into base **107**.

Thus, by selectively moving the shelf plate by reversing the voting device **106** from the position shown in FIG. **4**, the shelf structure may be selectively positioned in the orientation shown in FIG. **11**. Such reversal positions the upper surface of the voting device **106** within the hollow inner recess of the base panel **95** and presents the flat supporting surface **111** of the shelf structure for access by a voter.

Referring to FIG. **10**, it will be noted that the base panel **95** is provided with a slotted cut out portion **110** in the rear section **100** thereof which is adapted to receive therein the inner end of the ballot supporting structure **108** of the vote recording device when such device is inverted. Such inner end normally projects above the flat upper surface of section **100** of the base panel when the voting device is positioned upright for use as seen in FIG. **4**.

It will further be understood that the cut out portion **110** provides a hand hole to permit insertion of fingers between the base panel **95** and the shelf plate **111** when it is desired to reverse the orientation of the voting device and the shelf structure attached thereto.

It should also be understood that when shelf plate **111** is used to support a simplified form of voting device of the type shown in the aforementioned Abissi and Laframboise et al. patents, such a voting device is supported by the shelf structure **111** directly thereon and does not form an integral part thereof, as does the Harris type voting device **106**.

Having thus made a full disclosure of a preferred embodiment of an improved self-contained, multi-

purpose, portable lightweight voting booth, reference is directed to the appended claims for the scope of protection to be afforded thereto.

I claim:

1. A foldable portable self-contained voting booth which may be carried and erected by one person and which is intended for use in elections which utilize either punch card type ballots or write-in type ballots, said booth comprising a compact foldable carrying case in and upon which all components of said booth are arranged when said booth is folded and said case is closed for storage and transportation and when said case is opened and said booth is erected for use during an election; said case being defined by two interconnected sections which are positionable when said case is opened to extend generally at right angles relative to each other, one of said sections providing a base of said booth when said case is opened, the other of said sections providing a rear wall of said booth when said case is opened; wall panel means interposable between said sections when said case is opened to provide side walls of said booth and to maintain said case sections in said right angled relationship when said booth is erected, said panel means being foldable within said case when said case is closed; selectively extensible and retractable leg structures projecting from and operatively engaged with said base section when said booth is erected, each of said leg structures comprising two sections which are selectively interengaged with each other when said leg structure is extended and which are separable from each other when said leg structure is retracted; clip means provided in conjunction with one of said case sections for releasably retaining at least some of said leg structure sections in a stored position when said booth is folded and said case is closed; a self-contained punch card type vote registering device integral with and normally positioned to extend across said base section of said case when said booth is erected, said vote registering device being enclosable within said case when said booth is folded and said case is closed; and shelf structure provided in conjunction with said vote registering device and comprising a generally flat plate integrally secured to the underside of said device; said vote registering device with said shelf structure engaged therewith being received within a recess provided in said base section of said case, said device being removable from said recess and invertable relative thereto so that either said device or said shelf structure may be selectively presented to a voter when said booth is erected, whereby either punch card type ballots or write-in type ballots may be used selectively in conjunction with said booth.

2. The booth of claim 1 in which all of said components of said booth are positioned within the confines of said case when said booth is folded and said case is closed.

3. The booth of claim 1 in which said leg structures are separable from said base section and are retractable to a size which adapts said leg structures to be received within said case when the same is closed; said clip means being positioned within said rear wall case section for receiving and retaining said leg structures therein for storage when retracted.

4. The booth of claim 1 which further includes leg structure receiving and positioning means engaged in a generally rectangular bottom wall of said base section of said case for removably receiving said leg structures therein when said structures are extended.

5. The booth of claim 4 in which said receiving and positioning means comprises cup members defining leg receiving wells engaged with said bottom wall adjacent all corners thereof, each of said leg structures being slidably and frictionally engaged in an associated cup provided therefor.

6. The booth of claim 5 in which the upper ends of said cup members are positioned within said base section of said case and provide support means by which said base panel is supported within said base section.

7. The booth of claim 5 in which said receiving and positioning means furhter includes generally triangular shaped hollow retainers received over upper ends of said cup members and interposed therebetween and said base section bottom wall, and ring means interposed between said cup members and said retainers to preclude separation thereof.

8. The booth of claim 1 in which said means interposable between said case sections when said case is opened comprises privacy wall panels movably connected to one of said sections and enclosable within said case when said booth is folded and said case is closed and positionable when said case is opened and said booth is erected to extend generally at right angles to said base section and said rear wall section and operatively positioned therebetween, said wall panels defining side walls of said booth when the same is erected.

9. The booth of claim 1 in which said side wall panels are hingedly mounted on said base section of said case for pivotal movement to overlie said base panel when said booth is folded and said case is closed.

10. The booth of claim 1 which includes means interposable between margins of said side wall panels and margins of said rear wall section of said case when said booth is erected for maintaining said wall panels in said right angled relationship relative to such rear wall section.

11. The booth of claim 1 which further includes a light source mounted in said rear wall section of said case for illuminating said base section thereof when said case is opened and said booth is erected.

12. The booth of claim 1 in which said leg structure sections are telescopically interengaged when extended and foldable into parallel relationship when disengaged to retract the same for storage within said case.

13. The booth of claim 12 in which each of said leg structures further includes elastic means for maintaining said leg sections interengaged when extended and for precluding separation thereof when retracted and folded.

* * * * *