July 20, 1943. L. M. TAYLOR 2,324,546

AUTOMATIC FORM GENERATING MACHINE

Filed Jan. 31, 1941 2 Sheets-Sheet 1

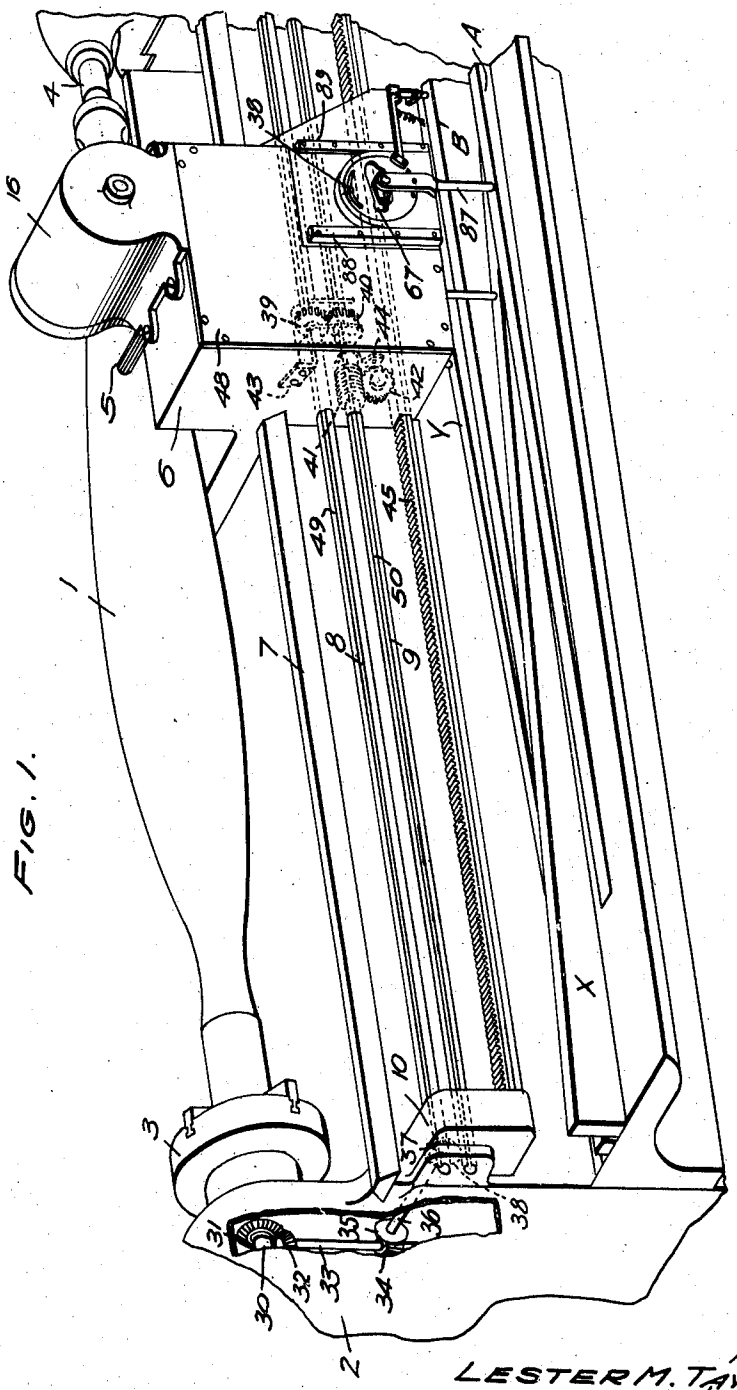

FIG. 1.

INVENTOR
LESTER M. TAYLOR
BY Edgar H. Snodgrass and Wade Koontz
ATTORNEYS

July 20, 1943. L. M. TAYLOR 2,324,546

AUTOMATIC FORM GENERATING MACHINE

Filed Jan. 31, 1941 2 Sheets-Sheet 2

FIG. 2.

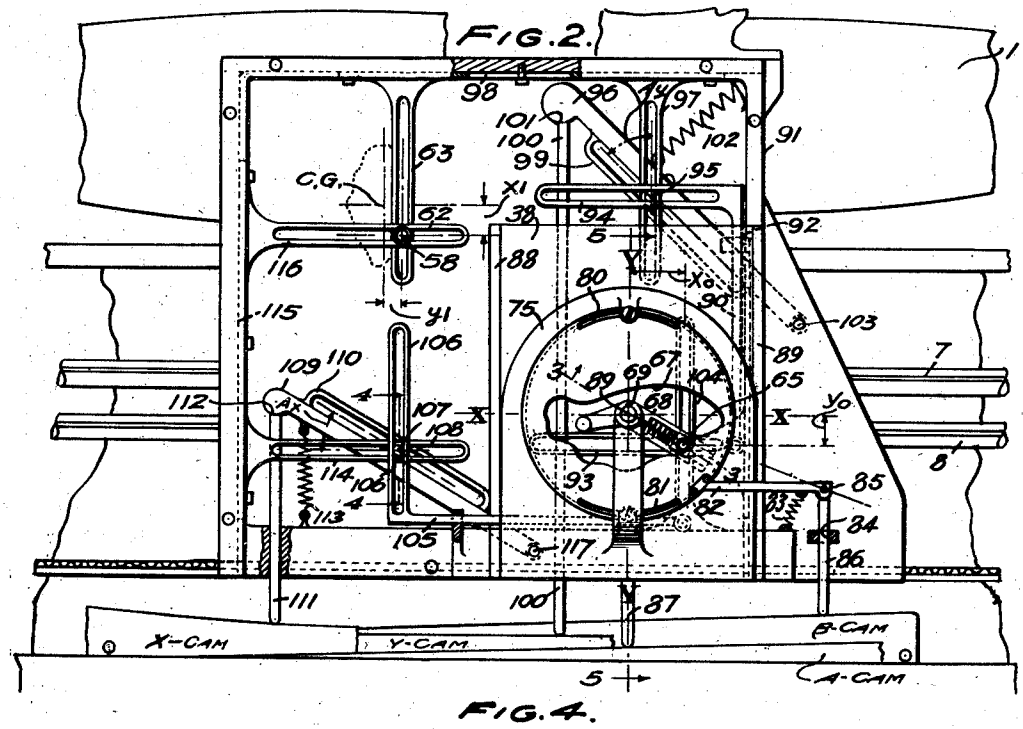

FIG. 4.

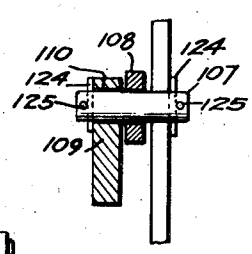

FIG. 5.

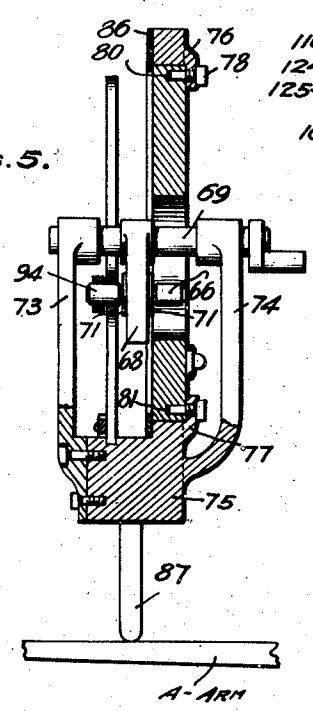

FIG. 3.

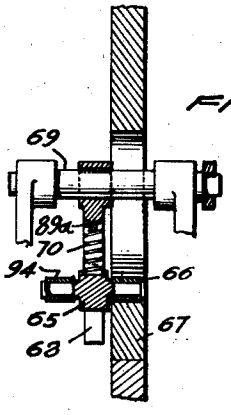

INVENTOR
LESTER M. TAYLOR
BY Elgin H. Snolgrass and Wade Roantz
ATTORNEYS

Patented July 20, 1943 2,324,546

UNITED STATES PATENT OFFICE

2,324,546

AUTOMATIC FORM GENERATING MACHINE

Lester M. Taylor, Dayton, Ohio

Application January 31, 1941, Serial No. 376,859

3 Claims. (Cl. 90—13.7)

(Granted under the act of March 3, 1883, as amended April 30, 1928; 370 O. G. 757)

The invention described herein may be manufactured and used by or for the Government for governmental purposes, without the payment to me of any royalty thereon.

This invention relates to mechanisms for generating forms such as propeller blades and the like.

The invention more particularly relates to a mechanism for accurately controlling, during machining, the variable dimensions which determine the propeller blade section.

In the design and construction of propeller blades, each section through the blade has a given width, thickness, angle with respect to a given base, giving the blade desired aerodynamic characteristics, and another angle known as the blade-angle to compensate for the displacement of the center of gravity due to bending of the propeller under load and centrifugal force.

In the preferred embodiment of the invention, there is provided a master cam for controlling the width and thickness of the blade at any given point on the blade and a system of cams operatively associated with the master cam for modifying the effect of the master cam at different points along the length of the blade.

The x and y components of a particular perimeter of the form to be generated is determined by a cam follower operatively engaging a master cam. The effective position of the cam follower is modified by a system of cams as the master cam and cutting tool move longitudinally of the body. The system of cams modify not only the x and y components for width and thickness but also shift the axis of ordinates to change the angle with respect to a given base and the blade-angle.

It is an object of this invention to reduce the shape of an object having four variables to a master cam modified by a separate cam for each variable, and to control—by means of the cams—mechanism for generating a solid object.

Referring to the drawings,

Fig. 1 is a perspective view of a portion of a lathe incorporating the present invention.

Fig. 2 is an elevational view of the master cam, and the auxiliary cams, the housing, with the cover plate removed, incorporating the mechanism operated by the cams. In this view the driving mechanism shown in Fig. 1 has been omitted for the sake of clarity.

Fig. 3 is a cross-sectional view along the lines 3—3 of Fig. 2.

Fig. 4 is a cross-sectional view along the lines 4—4 of Fig. 2.

Fig. 5 is a cross-sectional view along the lines 5—5 of Fig. 2.

Referring to the drawings, the work to be machined—a propeller in the preferred embodiment of the invention—is rotatably mounted on a headstock 3 and spindle 4 of lathe 2 in position to be machined by tool 5 carried by tool-carrying-and-positioning member 6 slidably mounted on supporting and guiding member 7. Carried by member 6 is a motor 16 for driving through suitable mechanism, a cutter 5. Attached to member 6 by means of set screws or the like is a cover plate 48. Movement of member 6 lengthwise on the lathe is accomplished in a suitable manner by a connection for driving shaft 30. This driving connection includes a gear 31 integral with shaft 30 and meshing with gear 32. Gear 32 is integral with one end of shaft 33, while at the other end of the shaft is a gear 34. Shaft 36 has integral therewith at one end a gear 35 meshing with gear 34 and at the other end a gear 37 meshing with gear 38, which in turn is integral with splined shaft 8. Gear 39 is mounted on splined shaft 8 to rotate therewith but to slide with respect thereto as the result of a projection (not shown) received in the splined part 49 of the shaft. Gear 39 meshes with a gear 40 similarly connected to the spline 50 of shaft 9 to rotate therewith but to slide with respect thereto. Gears 39 and 40 are laterally positioned in relation to member 6 by means of bracket 43 carried by member 6. Also carried by splined shaft 9 to rotate therewith—but to slide with respect thereto as the result of a projection (not shown) entering the spline 50—is a worm gear 41 meshing with a gear 42 which in turn meshes with rack 45. Gear 41 is positioned laterally in spaced relation to member 6 by means of bracket 44 carried by member 6. It is to be understood that the gears are so selected as to drive the member 6 at a preselected rate, also that a suitable clutch may be incorporated in the driving connection if desired.

The longitudinal position of cutter 5 is controlled by a master cam 67 and auxiliary cams or templates A, B, X, Y, (Fig. 2) which positions—through mechanism to be hereinafter more fully described—a pin 58. The position of pin 58 determines the contour of the blade at any particular location lengthwise of the blade.

The center of gravity of the section to be generated corresponds to the center of rotation of the cam and cam follower. Thus in Fig. 2, the center of gravity for a particular section of the blade is shown as c. g. and the coordinates

x_1y_1 of a point on the section as located by the center of pin 58 is x_1y_1. The coordinates of the cam follower 65—considering the center of pin 69 as the axis of ordinates—is x_0y_0. Since the value of x_1 corresponds to the value of x_0 as modified by the x cam thru pin 111—which determines the angle A_x of lever 109—it follows that $x_1=x_0 \tan A_x$. Similarly $y_1=y_0 \tan A_y$.

Pin 58 moves in response to movement of cam follower 65 having a roller 66 (Fig. 3) for engaging the face and following the trace of master cam 67. Cam follower 65 is carried with freedom for sliding movement by cam follower carrying arm 68, which in turn has a cut-out portion 89a (Fig. 3) for receiving the cam follower and also for receiving a spring 70 adapted to maintain the cam follower in engagement with the trace of cam 67. Follower 65 is provided with suitable guiding projections 71 (Fig. 5) for preventing relative lateral movement between carrier arm 68 and follower 65. Arm 68 is pivotally mounted on shaft 69 carried by brackets 73 and 74 (Fig. 5) which are in turn suitably fastened to cam carrier 75. Cam member 67 is mounted for limited rotative movement about the center of shaft 69 constituting an axis of ordinates as designated by X—X and Y—Y axes drawn therethrough. Cam carrier member 75 is provided with a pair of lugs 76 and 77 into which is threaded pins 78 and 79 receivable in slots 80 and 81 of cam member 67 for limiting the rotation of that member. Rotation of cam member 67 is effected by arm 82 suitably, rigidly fastened thereto. Arm 82 and cam member 67 are urged to rotate in clockwise direction by spring 83. The position of arm 82 is controlled by pin 86, slidably received in opening 84, and engaging pitch controlling cam B which controls the position of pin 86 and the degree of rotation of the cam member 67. Arm 82 and pin 86 are in sliding bearing engagement at 85.

Cam member 67 and cam carrier 75 are slidably supported on back plate 38 to move in response to blade-angle controlling cam A. Pin 87, integral with cam carrier 75, operatively engages blade-angle controlling cam A. Guide members 88 and 89, Fig. 2 are provided for cam carrier 75.

Cam member 67 is thus shown to be slidable and rotatable in response to changes in two variables in the shape of the form generated.

The width and thickness of the blade section, consistent with changes in blade pitch and blade angle, is controlled by the position of cam follower 65. The horizontal position of the cam follower hereinafter known as the abscissa, governs the horizontal position of pin 58 by means of bracket 90, which in turn is guided for vertical sliding movement on frame 91 by guiding means 92. Bracket 90 is provided with an arm 93 slotted to receive portion 94 of cam follower 65. Vertical movement of cam follower 65 is transmitted by arm 93 to bracket 90 which in turn transmits the motion by slotted arm 94 to pin 95. Pin 95 slides along arm 96 in response to movement of arm 94 resulting in horizontal movement of arm 97 of bracket 98 which in turn is transmitted to arm 63 and pin 58. Arm 96 is provided with a guide portion 99 for receiving pin 95. The position of arm 96 for any position lengthwise of the blade is governed by cam Y. Pin 100, vertically, slidably mounted in frame 91, slidably engages cam Y and also engages arm 96 at 101 with freedom for relative sliding movement. Spring 102 urges arm 96 to engagement with pin 100 and is sufficiently stiff to hold arm 96 against movement when pin 95 is being moved by arm 94.

Horizontal movement of cam follower 65 is transmitted to slotted arm 104 of bracket 105 which is horizontally, slidably mounted on frame 91. Bracket 105 has integral therewith a slotted arm 106 for receiving pin 107. Washers 124 and cotter pins 125 serve to position pin 107 laterally (Fig. 4). Pin 107 is slidably received in guide-way 110 of arm 109, pivotally connected at 117 to frame 91. The position of arm 109 for any position lengthwise of the blade is governed by cam X. Pin 111, mounted for vertical sliding movement in frame 91, slidably engages cam X at one end and engages arm 109 at 112 for pivotal sliding movement with respect thereto. Spring 113, attached at one end to arm 109 and at the other end to frame 91, holds arm 109 in operative engagement with cam X. Movement of bracket 105 transmits the horizontal component of the motion to pin 107 which in turn rides on arm 109 in guide-way 110, moving arm 103, bracket 115 and arm 116 vertically to move pin 58 a corresponding amount. Spring 113 has sufficient initial tension to prevent upward movement of pin 107 and arm 109 under action of bracket 105.

The position of pin 58 determines—through suitable servo-mechanism (not shown)—the position of the cutter 5. Since the position of pin 58 is determined by the master cam as modified by the auxiliary cams, it is only necessary to change the master cam or one of the auxiliary cams, or any combination of them in order to change the blade characteristics.

Various changes may be made in the device without departing from the spirit of the invention, it being intended to be limited only by the terms of the appended claims.

I claim:

1. A device adapted to be associated with a tool and servo mechanism for operatively positioning the same to shape an object, which object in its completed form varies in width, thickness, angle of pitch which one dimension of the object makes with respect to a given plane, and angle which the length of the blade makes with respect to a given plane; comprising rotatably and slidably mounted master cam, means for controlling the rotation of said cam in accordance with changes in the said angle of pitch, means for controlling the sliding of the said cam in accordance with changes in the said angle which the length of the blade makes with respect to a given plane, a cam follower for engaging said cam for determining the width and thickness of the said object, and for modifying the effect of the said cam follower.

2. A device adapted to be associated with a tool and mechanism for operatively positioning the same to shape an object which in its completed form varies in width, thickness, angle of pitch which one dimension of the blade makes with respect to a given plane, and angle which the length of the blade makes with respect to a given plane; comprising a rotatably and slidably mounted master cam, means including a template for rotating the cam to correspond to the said angle of pitch, means including a template for sliding said cam to correspond to the said angle which the length of the blade makes with respect to a given plane, a cam follower for engaging said cam to determine the width and thickness of the said object, and templates for modifying the width and thickness deter-

minations of the said cam follower, said templates having incorporated therein the changes in the variable dimensions of the object along the length of the blade.

3. A device adapted to be associated with a tool and mechanism for operatively positioning the same to shape an object which varies in width, thickness, angle of pitch which the width of the object makes with respect to a given plane and angle which the length of the blade makes with respect to a given plane; comprising a rotatably and slidably mounted master cam, the trace of the said master cam having incorporated therein the said width and thickness dimensions, means for controlling the rotation of said cam in accordance with changes in the said angle of pitch, means for controlling the sliding of said cam in accordance with changes in the said angle which the length of the blade makes with respect to a given plane, a cam follower, and means connecting said cam follower to said positioning mechanism.

LESTER M. TAYLOR.