United States Patent [19]

Cryder

[11] **3,811,363**

[45] **May 21, 1974**

[54] **PRIORITY SYSTEM FOR SERIES-TYPE HYDRAULIC CIRCUITS**

[75] Inventor: **John R. Cryder,** Joliet, Ill.

[73] Assignee: **Caterpillar Tractor Co.,** Peoria, Ill.

[22] Filed: **May 10, 1973**

[21] Appl. No.: **359,195**

[52] **U.S. Cl.** ..... **91/412,** 60/422, 60/97 R, 137/115

[51] **Int. Cl.** **F15b 11/00,** F01b 21/02

[58] **Field of Search** ..... 60/422, 468, 97 R; 91/412; 137/101, 115

[56] **References Cited**

UNITED STATES PATENTS

3,364,821	1/1968	Gephart et al.	137/115
3,633,617	1/1972	Stacey	137/115

Primary Examiner—Edgar W. Geoghegan
Assistant Examiner—A. M. Zupcic
Attorney, Agent, or Firm—Ralph E. Walters

[57] **ABSTRACT**

A priority system for series-type hydraulic circuits including a plurality of hydraulic work systems disposed in serial fluid communication with a source of fluid under pressure and a priority valve operatively associated with a supply line between two of the work systems operatively dividing them into upstream and downstream work systems and responsive to fluid pressure between the source and the upstream system in excess of a predetermined pressure level automatically to reduce pressure in the downstream work system and maintain a predetermined minimum pressure differential between the downstream and upstream systems when they are operated simultaneously to insure positive actuation of the upstream system.

11 Claims, 1 Drawing Figure

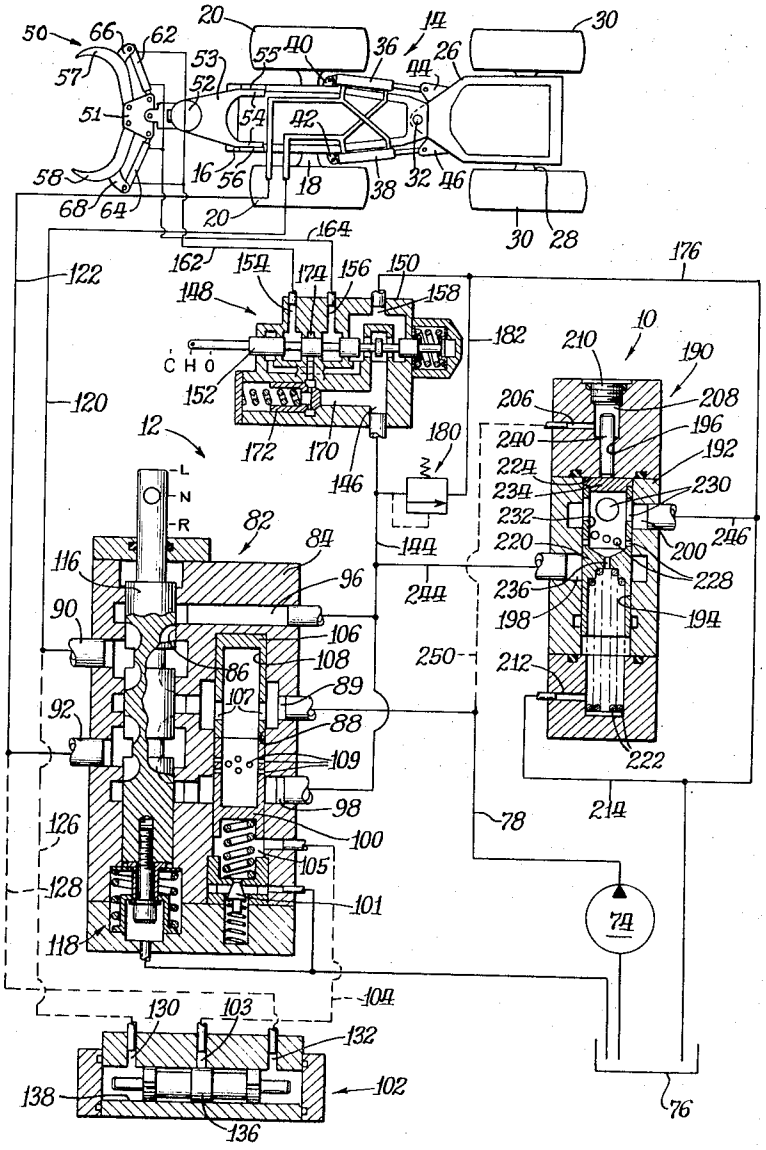

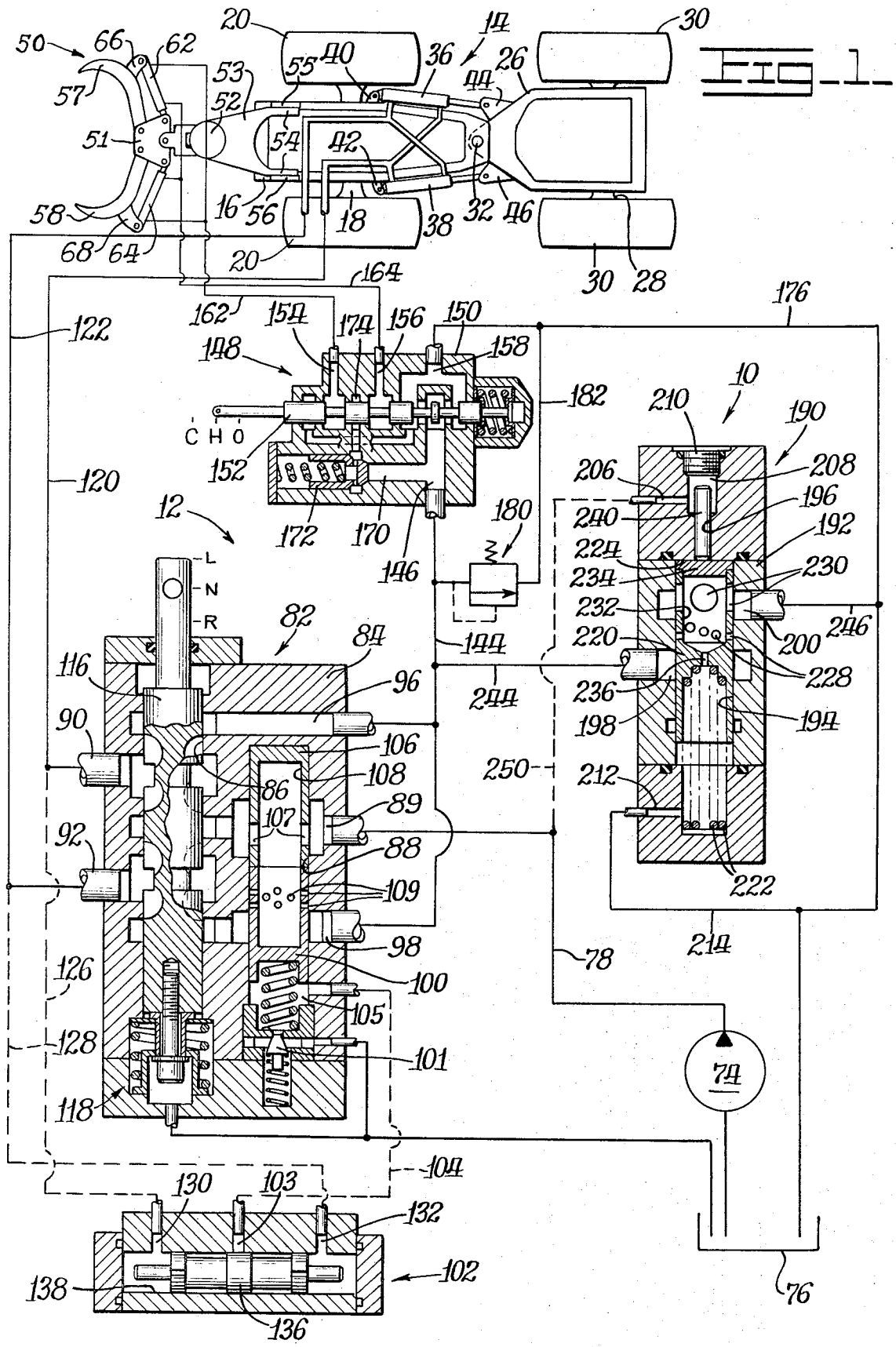
50
66
62
57
51
58
68
64
20
53
52
55
40
36
14
26
44
30
54
42
16
56
18
38
32
46
20
30
28
164
162
154
174
156
150
158
148
182
C H O
152
172
170
146
180
122
120
12
L
N
R
82
84
116
96
90
106
108
86
89
107
92
88
109
98
100
105
101
126
128
118
104
130
103
132
138
102
136
176
10
210
190
206
208
196
240
192
224
230
234
232
246
200
220
228
236
198
194
244
250
212
222
214
78
74
76

Fig. 1

PRIORITY SYSTEM FOR SERIES-TYPE HYDRAULIC CIRCUITS

BACKGROUND OF THE INVENTION

In many vehicle applications it is desirable to employ series-type hydraulic circuits to minimize total flow requirements and cost and to achieve simultaneous operation of several circuits. Since the actuating pressure of each active circuit is imposed as back pressure on the preceding circuits, it is possible that only the last system in the series is capable of positive actuation. For this reason, series circuits have been generally unacceptable where it is necessary that priority be given to a work system other than the last in the series.

One commonly used solution is to place the high priority system in parallel with another circuit and employ a flow divider to insure positive actuation of the high priority system. This is undesirable in that a flow divider is inherently inefficient and generally requires a larger more costly pump.

The most obvious solution is to place the high priority system last in the series. In instances where the high priority system also has the higher pressure requirement, this is undesirable due to the back pressure imposed on the lower pressure systems. As a result, the valves must be designed to withstand the higher pressures thus increasing size and cost thereof. This also increases the incident of relief valve operation in the relatively low pressure circuits and can result in accelerated wear on the relief valve components.

SUMMARY AND OBJECTS OF THIS INVENTION

Accordingly, it is an object of this invention to provide an improved priority system for series-type hydraulic circuits.

Another object of this invention is to provide such an improved priority system which automatically insures a predetermined pressure differential across a hydraulic steering system when the supply pressure exceeds a predetermined value.

Another object of this invention is to provide an improved priority system of the character described which is particularly adapted for a hydraulically controlled vehicle and which is responsive to supply pressure to a hydraulic steering system on the vehicle automatically to establish a bypass flow path in parallel to a secondary work system on the vehicle when the supply pressure exceeds a predetermined value to apportion a predetermined portion of the supply pressure for positive actuation of the steering system.

Other objects and advantages of the present invention will become more readily apparent upon reference to the accompanying drawing and following description.

BRIEF DESCRIPTION OF THE DRAWING

FIG. 1 is a schematic diagram of a series-type hydraulic circuit with sectional valve portions including a priority system embodying the principles of the present invention.

DESCRIPTION OF THE PREFERRED EMBODIMENT

Referring more particularly to the drawing, a priority system embodying the principles of the present invention is generally indicated by the reference numeral **10**

as operatively associated with a series-type hydraulic circuit generally designated by the reference numeral **12.** The hydraulic circuit is operatively associated with a vehicle indicated generally at **14** for controlling the steering of the vehicle and work implements mounted thereon.

The vehicle **14** includes a rear frame **16** which is supported on a rear axle **18** having a pair of wheels **20** individually rotatably supported at its opposite terminal ends. A front frame **26** is supported on a front axle **28** having a pair of wheels **30** individually rotatably mounted at its opposite terminal ends. The inner ends of the front and rear frames are pivotally connected by a pivot connection **32** to permit articulation of the frames about a substantially vertical axis for purposes of steering the vehicle. Articulation of the frames is controlled by a pair of steering jacks **36** and **38** which are individually pivotally connected at one end to a pair of brackets **40** and **42,** respectively, which are secured to the opposite outer sides of the rear frame **16.** The opposite ends of the jacks are individually pivotally connected to the front frame **26** by means of a pair of brackets **44** and **46** secured thereto. With this arrangement, extension of the jack **36** and retraction of the jack **38** is effective to steer the vehicle to the right by articulation of the frame sections about the pivot connection **32.** Alternately, retraction of the jack **36** and extension of the jack **38** is effective to steer the vehicle to the left by articulation of the front and rear frames about the pivot connection **32.**

In order to permit the accomplishment of useful work with the vehicle **14,** an implement generally indicated at **50** is supported at the outer end of the rear frame **16** and in this case constitutes a grapple mechanism for lifting and transporting a load. The grapple includes a base member **51** which is preferably universally connected to a rotator mechanism **52** secured to the outer free end of the boom **53.** The boom includes a pair of laterally spaced mounting legs **54** which are pivotally connected to suitable brackets **55** and **56** secured to the rear frame **16.** Any suitable power device such as a hydraulic jack, not shown, may be provided for raising and lowering the boom to control the elevational position of the grapple.

A plurality of suitable grapple forks **57** and **58** are individually pivotally supported on the base **51** for grasping and supporting a load therein. The pivotal movement of forks **57** and **58** is controlled by a pair of hydraulic jacks **62** and **64,** respectively, which are individually pivotally interconnected between the base **51** and suitable brackets **66** and **68** on the forks **57** and **58,** respectively. With this arrangement, extension of the jacks **62** and **64** rotate the forks inwardly about their pivotal connections toward a closed load-grasping position whereas retraction of the jacks rotates the forks outwardly about their pivotal connections to an open load-release position as illustrated in the drawing.

The series-type hydraulic circuit **12** includes a pump **74** which is adapted to draw fluid from a reservoir **76** for supply of fluid under pressure through a pump discharge passage, depicted as a line **78,** to a steering control valve generally indicated at **82.** The valve **82** is of the type disclosed in U.S. Pat. No. 3,260,325 assigned to the Assignee of the subject invention and a detailed disclosure and description of the construction and operation of that valve may be had by reference to that patent. Accordingly, the following brief summary of

the construction of the steering valve **82** will suffice for an understanding of the present invention.

The valve **82** includes a body **84** having a pair of substantially parallel bores **86** and **88.** The body further includes an inlet port **89** in fluid receiving relation to the supply line **78,** a pair of work ports **90** and **92** and a pair of discharge ports **96** and **98** all of which communicate with the bore **86** at axially spaced points therealong. One of the discharge ports **98** also communicates with the bore **88** which reciprocably houses a spring biased compensating spool **100.** The position of the compensating spool is controlled by a spring biased pilot poppet **101** and a shuttle valve **102** which has a signal port **103** in fluid communication by way of a line **104** with a chamber **105** disposed between the compensating spool and the pilot poppet. The compensating spool is normally biased into a closed seating relation with a hollow adapter plug **106** having a plurality of radial ports **107** communicating the interior of the plug with the inlet port **89.** The compensating spool also includes an internal bore **108** and a plurality of staggered metering orifices **109** for selective communication of the inlet port with the discharge port **98.**

A control spool **116** is reciprocably disposed in the bore **86** for selectively controlling communication between inlet port **89,** work ports **90** and **92** and the discharge ports **96** and **98.** A centering spring mechanism **118** is adapted resiliently to urge the spool **116** toward a neutral position which may be selectively moved in either direction from neutral toward active left and right steering positions. The motor ports **90** and **92** are connected by a pair of motor lines **120** and **122** to the steering jacks **36** and **38** for selective direction of fluid pressure to the jacks for controlling steering of the vehicle **14.** A pair of signal lines **126** and **128** connect the motor lines **120** and **122,** respectively, with a pair of signal ports **130** and **132** which are individually axially spaced on opposite sides of the signal port **103** of the shuttle valve **102.** A shuttle spool **136** is reciprocably disposed in a bore **138** of the shuttle valve to control communication between the ports **130** and **132** and the signal port **106.**

The discharge ports **96** and **98** are connected by a supply passage or line **144** to the inlet port **146** of a grapple control valve **148.** The valve **148** is a three-position four-way valve including a body **150** housing a reciprocable spool **152** for selective control of communication between the inlet port **146,** a pair of work ports **154** and **156** and a discharge port **158.** The work ports are connected by a pair of lines **162** and **164,** respectively, to the grapple actuating jacks **62** and **64** for selectively controlling the movements of the forks **57** and **58.** The valve is of the open center type wherein fluid pressure in the inlet port **146** is communicated directly to discharge port **158** when the spool **152** is in the neutral position as shown. A pressure supply passage **170** in the body directs fluid by way of a check valve **172** from the inlet port **146** to a pressure supply annulus **174** which communicates with the spool **152** intermediate the axially spaced work ports **154** and **156.** The fluid pressure in the annulus is available to either one of the work ports depending on the direction the spool is moved. Fluid discharged from the valve **148** returns to the reservoir by way of a return line **176.**

A relief valve **180** controls communication between the line **144** and the line **176** by way of a bypass line **182** to limit the maximum working pressure in the grapple control system independently of the pressure in the steering system as controlled by the compensating spool **100** and pilot poppet **101** of the steering control valve **82.** In one typical example, the relief valve **180** is set to open at and limit the grapple actuating pressure to approximately 2,040 psi.

In keeping with the principles of the present invention, the priority system **10** is disposed in fluid communicating controlling relation between the line **144** supplying the inlet port **146** of the valve **148** and the return line **176** interconnecting the valve **148** and the reservoir **76.** This location of the priority system operatively divides the steering and grapple systems into upstream and downstream systems, respectively, relative thereto. The priority system includes a priority valve **190** having a multi-part body **192** with a relatively large diameter bore **194** and a relatively small diameter bore **196** formed therein in end-to-end coaxial relation. An inlet port **198** and a discharge port **200** open into the bore **194** at axially spaced points therealong. A pilot control port **206** communicates with a control chamber **208** formed in the body adjacent to the outer end of the small diameter bore **196.** The chamber **208** is closed by a plug **210** screw-threadably received within the outer end of the bore. A drain port **212** communicates the opposite end of the bore **194** with the return line **176** by way of a line **214.**

A spool **220** is reciprocably disposed in the bore **194** of the priority valve **190** for controlling communication between the inlet port **198** and the discharge port **200.** A pair of springs **222** resiliently urge the spool **220** upwardly as viewed in the drawing into engagement with a shoulder **224** formed by the juncture of the bores **194** and **196** normally to block communication between the inlet port and the discharge port. Spool **220** further includes a plurality of axially staggered radially disposed modulating ports **228** and a plurality of diametrically aligned radial ports **230** disposed in axially spaced relation to the modulating ports for communication with a central bore **232** in the spool. The outer end of the bore **232** is closed by a cap **234** with the opposite end of the bore communicating by way of a restricted passage **236** with the lower end of the bore **194** which is, as previously described, communicated with the reservoir **76** by way of the port **212** and the line **214.**

An actuating piston **240** is disposed in the bore **196** for engagement with the cap **234** at the upper end of the spool **220** whereby pressure in the chamber **208** acting on the piston **240** exerts a downward force on the spool **220** in opposition to the bias of the springs **222.** In one preferred embodiment, the area of the piston **240** and the force of the springs **222** are correlated such that a pressure of approximately 2,200 psi is required to initiate opening movement of the spool **220.**

The inlet port **198** of the valve **190** is communicated by a line **244** with the line **144** extending between the valve **82** and the inlet port **146** of the valve **148.** The discharge port **200** of the valve **190** communicates by way of a line **246** with the return line **176** connected to the reservoir. The chamber **208** is in communication by way of the port **206** and a control passage or line **250** with the supply line **78** interconnecting the pump **74** and the valve **82.**

OPERATION

While the operation of the present invention is believed clearly apparent from the foregoing description, further amplification will subsequently be made in the following brief summary of such operation. With reference to the drawing, when the valves **82** and **148** are in the neutral position as shown, the output of the pump **74** is returned to the reservoir by way of the line **78**, the compensating spool **100**, the line **144**, the inlet port **146**, the valve **148**, the discharge port **158**, and the return line **176**. Under these conditions, the spool **116** of the valve **82** blocks the inlet port **80** from the work ports **90** and **92** with the work ports having restricted communication with the discharge ports **96** and **98**. In the valve **148**, the pressure supply passage **174** is blocked by the spool **152** from communication with the work ports **154** and **156** with communication between the work ports and the discharge passage **158** being blocked by the spool.

Movement of spool **116** of the valve **82** to either of its operative positions is effective to communicate the inlet port **80** with a respective one of the work ports **90** and **92** with the other work port being communicated to the respective one of the discharge ports **96** and **98**. Such communication results in steering of the vehicle in one direction or the other depending on the direction of spool movement with the fluid displaced by the jacks **36** and **38** being directed to the valve **148** by way of the line **144**. Fluid pressure in the steering system is limited to a safe predetermined value, for example 2,750 psi, by cooperation of the compensating spool **100** and the pilot poppet **101**. The pressure compensation, as is more fully described in U.S. Pat. No. 3,260,325, is provided by a signal from the pressurized one of lines **120** and **122** being directed to the chamber **105** by way of the shuttle valve **102**.

Under conditions wherein the steering system is activated with the grapple valve **148** in the neutral position, the pressure in the line **78** reflects only the pressure required to steer the vehicle. This pressure is communicated to the control chamber **208** by way of the line **250**. Should the steering pressure exceed 2,200 psi, the spool **220** is biased toward an open position with no effect on the supply pressure. Steering pressure below 2,200 psi is ineffective to overcome the bias of springs **222** such that the spool **220** remains in the position illustrated blocking communication between the inlet port **198** and the discharge port **200** of the valve **190**.

During operation of the steering system as last described, it is at times desirable that the operator move the spool **152** of the control valve **148** to an active position for actuation of the grapple **50** to avoid slipping of the load. The pressure required by the grapple is imposed as back pressure on the contracting ends of the steering cylinders **36** and **38**. In instances where substantial pressure is required for operation of the grapple, the effective pressure acting on the steering cylinders with the steering system at relief valve pressure will be equal to the difference between the steering and grapple pressures. If both systems are at relief valve pressure, the differential across the steering system is only 710 psi with the supply pressure in line **78** being approximately 2,750 psi. As a result, the output of the pump **74** is bypassed across the compensating spool **100** such that positive steering control of the vehicle may be limited.

The addition of the priority system **10** to such a series-type hydraulic circuit overcomes this deficiency in the following manner. The pressure in the line **78** is communicated by the line **250** to the chamber **208**. When the pressure in the control chamber **208** exceeds **2200** psi, in one preferred embodiment of the priority system, the force exerted by the piston **240** against the spool **220** is sufficient to overcome the bias of the springs **222** thus the spool **220** begins to move downwardly. This establishes controlled communication between the line **144** and the return line **176** to limit the pressure build up in the line **144** and hence the grapple circuit associated with the valve **148**. Such conditioning of the valve **190** provides a controlled bypass circuit in parallel with the grapple circuit to limit the maximum pressure therein in inverse proportion to the pressure in the supply line **78**. This maintains a predetermined pressure differential between the steering and grapple systems when they are operated simultaneously to insure positive actuation of the steering system while permitting the grapple system to operate at an acceptable level somewhat lower than when the steering system supply pressure is below 2,200 psi or the steering system is inactive. For example, when the vehicle engine is operating at high idle with the steering circuit at relief valve pressure of 2,750 psi, the valve **190** opens sufficiently to limit pressure in the grapple circuit to 610 psi thus providing a differential across the steering circuit of 2,140 psi which is effective to steer the vehicle under all conditions.

Since the grapple relief valve **180** is set at 2,040 psi, operation of the grapple circuit alone is ineffective to actuate the valve **190**; therefore, the grapple circuit is capable of working at full relief valve pressure when the steering system is inactive.

In view of the foregoing, it is readily apparent that the priority system of the present invention as employed with a series-type hydraulic circuit automatically insures a predetermined pressure differential between the steering system and the grapple control system when the supply pressure exceeds a predetermined minimum value. The priority system is responsive to supply pressure from the source automatically to establish a bypass flow path in parallel to the grapple control system when the supply pressure exceeds a predetermined value to apportion a predetermined portion of the supply pressure for positive actuation of the steering system. This automatically provides a system wherein the steering circuit is given priority to insure that the vehicle may be steered by selectively limiting pressure in remaining circuits on the vehicle downstream of the steering circuit.

While the invention has been described and shown with particular reference to the preferred embodiment, it will be apparent that variations might be possible that would fall within the scope of the present invention which is not intended to be limited except as defined by the following claims.

What is claimed is:

1. A priority system for series-type hydraulic circuits comprising;

a source of fluid under pressure;

a plurality of hydraulic work systems;

means connecting said work systems in serial fluid communication to said source of fluid under pressure which fluctuates in response to varying work loads on the systems; and

priority valve means operatively associated with said connecting means between at least two of said work systems operatively dividing them into upstream and downstream work systems on opposite sides of said priority valve means which is responsive to fluid pressure between said source and said upstream system in excess of a first predetermined pressure level for automatically reducing pressure in the downstream work system so that a predetermined minimum pressure differential is maintained between the downstream and upstream work systems when they are operated simultaneously to insure positive actuation of the upstream system while permitting the downstream work system to operate at an acceptable level somewhat lower than when the upstream work system is inactive.

2. The priority system of claim **1** wherein said source of fluid under pressure includes a pump, a pump discharge passage communicating between said pump and said upstream work system, and a low pressure reservoir, said connecting means comprises a fluid supply passage for said downstream work system, said priority valve means includes a bypass passage disposed in parallel with said downstream work system for communicating said fluid supply passage with said reservoir, and a body housing a spring biased spool means normally to block said bypass passage but being moveable to provide a variable orifice in said bypass passage for metering fluid from said fluid supply passage when the pressure in said pump discharge passage exceeds said first predetermined pressure level.

3. The priority system of claim **2** including actuating means operatively engaging said spool means in opposition to said spring bias and control passage means operatively connecting said actuating means with said pump discharge passage whereby said actuating means is responsive to pressure in said pump discharge passage in excess of said first predetermined pressure level for moving said spool and opening said variable orifice to vent fluid from said fluid supply passage and control pressure in said downstream system inversely to said source pressure.

4. The priority system of claim **3** wherein the series-type hydraulic circuits are operatively associated with a hydraulically steered vehicle having at least one other hydraulically controlled function thereon.

5. The priority system of claim **4** wherein the upstream work system is a steering system operative to control vehicle steering and the downstream work system is an implement system operative to control said at least one other hydraulically controlled function.

6. The priority system of claim **5** wherein said spool means includes an elongated reciprocable spool having metering means cooperating with said body to provide said variable orifice upon movement of said spool away from the spring biased blocking position, said actuating means includes a reciprocable piston disposed in an actuating chamber and engaging said spool in opposition to said spring bias, and said control passage means communicates with said actuating chamber for supply of pressure from said pump discharge passage thereto so that pump discharge pressure in excess of said first predetermined level acting on said piston will overcome said spring bias to move said elongated spool away from said blocking position.

7. The priority system of claim **6** wherein said steering system includes a steering control valve for selective control of vehicle steering, a steering relief valve in said steering system for limiting fluid pressure in said steering system to a second predetermined level, and said implement circuit includes an implement control valve for selectively controlling fluid flow therein and an implement relief valve for limiting fluid pressure in said implement circuit to a third predetermined level less than said second predetermined maximum level.

8. The priority system of claim **7** wherein the magnitude of said spring bias is selected so that said first predetermined pressure level is intermediate said second and third predetermined pressure levels.

9. A priority system for serially arranged vehicle steering and implement hydraulic circuits supplied respectively from a source of fluid pressure including a pump and a reservoir with a supply passage communicating between the steering and implement circuits comprising;

a bypass flow path communicating between such a supply passage and the reservoir and arranged in parallel to the implement circuit;

Priority valve means disposed in said bypass flow path and normally resiliently biased to a closed position blocking flow therethrough and moveable to progressively open said bypass flow path to permit variable restricted communication between the supply passage and the reservoir; and

actuating piston means operatively associated with said priority valve means in opposition to said resilient bias and responsive to fluid pressure between the pump and the steering circuit above a predetermined value to move said priority valve means away from said closed position and vent fluid pressure from the supply passage and limit pressure in the implement circuit so that a predetermined minimum pressure differential is maintained between the steering circuit and the implement circuit when the steering and implement circuits are both active.

10. A priority system for series-type hydraulic circuits comprising;

a source of fluid under pressure;

a primary work system including primary valve means for selectively controlling fluid flow in said work system;

means connecting said primary work system with said source of fluid under pressure;

a secondary work system including secondary valve means for selectively controlling fluid flow therein;

supply passage means serially connecting said secondary valve means through said primary work system and said connecting means to said source of fluid under pressure; and

priority valve means operatively associated with said supply passage means between said primary and secondary valve means and responsive to fluid pressure in said connecting means automatically to establish a bypass flow path in parallel to said secondary work system when the pressure in said connecting means exceeds a predetermined value so that a predetermined minimum pressure differential is maintained between said supply passage means and said connecting means when the primary and secondary valve means are operated simultaneously to insure positive actuation of said primary work system.

11. The priority system of claim 10 including a primary relief valve in said primary work system for limiting pressure in said primary work system to a first predetermined maximum level, a secondary relief valve in said secondary work system for limiting pressure in said secondary work system to a second predetermined maximum level which is substantially less than said first predetermined maximum level and said predetermined

pressure value to which said priority valve is responsive is less than said first predetermined maximum level and higher than said second predetermined maximum level so that said priority valve is responsive only to pressure in said connecting means between said source of fluid pressure and said primary work system.

* * * * *