Oct. 29, 1940. R. E. LAIDLEY 2,219,959

HUMIDIFYING DEVICE

Filed Feb. 1, 1940

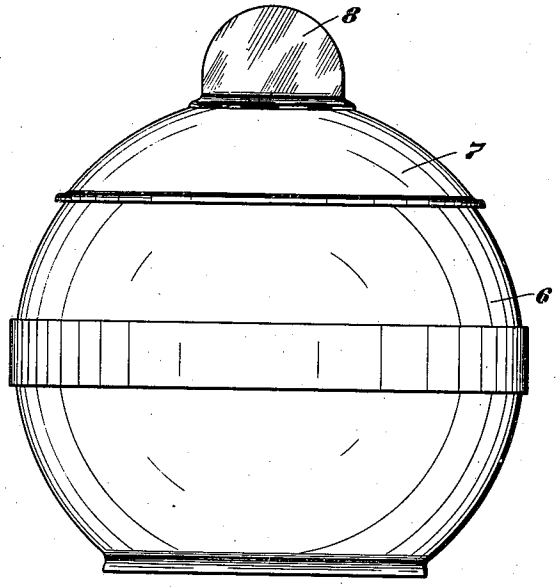

FIG. 1.

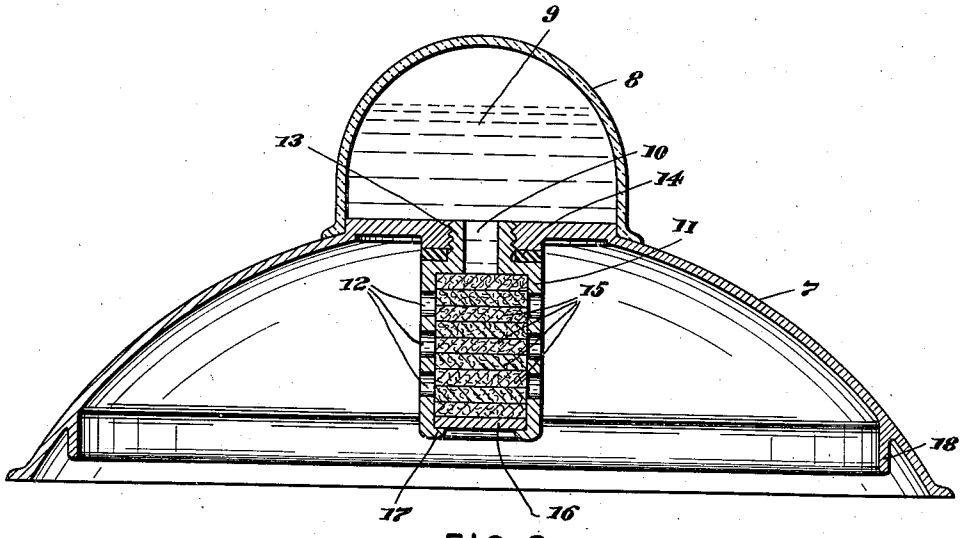

FIG. 2.

INVENTOR.
ROBERT E. LAIDLEY

BY

ATTORNEY.

Patented Oct. 29, 1940 2,219,959

UNITED STATES PATENT OFFICE

2,219,959

HUMIDIFYING DEVICE

Robert E. Laidley, St. Louis, Mo.

Application February 1, 1940, Serial No. 316,847

3 Claims. (Cl. 299—24)

This invention relates to humidifying devices, and more particularly to a device which is intended to provide an infinite volume of air of 60% to 80% humidity without bringing said air into immediate contact with liquid water. To illustrate the application of this device is specified its use in containers for tobacco and tobacco products, for instance in tobacco cans, humidors, cigarette cases, and the like.

The main object of the invention is to provide a humidifying device comprising a perforated container associated with a liquid reservoir and an element composed of a mineral fibre such as asbestos millboard, the fibre being compressed to such a density as to prevent the flow of any liquid through the mineral fibre except by evaporation caused by a demand for moisture of the material requiring moisture, the fibre being so formed and compressed as to prevent the relative humidity of the air going above 80% and also preventing the air from dropping below a relative humidity of 60%, and thereby controlling the relative humidity of the air in the container in which the device is placed between a predetermined high and low per cent of humidity.

The fundamental principle underlying this invention is well known. A solid material usually contains some water, known as its moisture content. With most materials this moisture content is higher when the material has been in contact for a period of time with air of high humidity, and lower when the same material has been in contact with drier air, or air of a lower humidity. It follows naturally that the humidity of the air in contact with the solid material affects the amount of water absorbed by the solid material. The water retained by a solid which is in equilibrium with air at a definite humidity is termed the equilibrium moisture content. Also, it is called regain moisture, because of the tendency of a thoroughly dry solid to absorb water from air until the equilibrium value is reached. Such hygroscopic moisture usually is expressed as per cent water, dry basis, and is a function of the per cent humidity of air with which it is in contact.

My humidifier consists of a container in which is mounted a water reservoir and a compact plug of odorless material, the porosity of which is controlled to prevent seepage of the liquid to the surfaces of the plug which are in contact with the air of the container. This plug has a controlled area of exposure to the air so that the rate of humidification of the air may be adjusted in a measure to the desiccating action or deliquescence of the specific solid being humidified. Water from the resorvoir moistens the plug material in part, but the permeability of the latter is too low to allow the percolation of the liquid through the plug and to the air. In this manner the material of the plug is moistened continuously up to a certain moisture content and, at the same time is dried continuously by air in the container. Drying of the plug is under conditions such that the falling rate period of a normal drying cycle exists. In this way it is impossible for liquid water to reach the air, and thereby to expose the air in the container to direct contact with liquid water.

When the humidifier is charged with an atmosphere of dry air or air whose humidity is less than 60%, water (which has been absorbed by the porous plug from the reservoir) vaporizes within the porous plug, migrates to the surface as water vapor and, at the surface said water vapor mixes with the air in the container until a humidity of from 60% to 80% has been attained. When equilibrium conditions have been reached, water held by the porous plug is in equilibrium both with the moisture content of the air and the free water contained in the reservoir.

While the application of this device is not limited to maintaining tobacco at the proper humidity for smoking, said application is discussed here to illustrate the general functioning of the device. It is well known that smoking tobacco should be in equilibrium with air of from 60% to 80% humidity. With my device the air can never exceed a humidity of 80% under ordinary temperature conditions. Therefore, the tobacco is maintained under optimum moisture conditions for smoking. In this way the device functions as if the tobacco were in contact with an unlimited quantity of air of the proper humidity.

The invention is illustrated in the accompanying drawing in which:

Fig. 1 is a perspective view of a tobacco humidor;

Fig. 2 is a vertical section through the cover of the humidor.

Referring to the drawing, 6 indicates a tobacco humidor or the like, made of plastic or other similar material and having a cover 7. The cover at its top has a plastic glass cap or dome member 8 rigidly cemented or otherwise secured to the top, the space within the dome forming a water reservoir 9. The top has an opening 10 leading from the reservoir, said opening being desirably screw threaded.

Into this opening is screwed a perforated container 11, having a plurality of vertically extending rows of perforations 12, and a reduced neck portion 13 screwed into the top 7 at the opening 10. The reservoir 9 is filled with water by removing the plug or container 11 and inverting the cover. A rubber washer 14 is spaced over the neck 13 and is compressed between the upper shoulder of the container and the underside of the top to make a fluid tight joint thus preventing the escape of any water from the reservoir through the connection between the container and the top. The bottom of the container 11, before being sealed is open and a plurality of discs or plugs 15 are inserted therethrough and after the desired or proper number of plugs are inserted into the container a bottom plug 16 of celluloid or the like is inserted, and thereafter the outer rim or edge of the container is bent over as shown at 17 to contact the plug 16 and hold the plugs in compact and close contact within the container. The discs 15 are circular in form and are cut from a sheet of asbestos millboard, the millboard having previously been compressed to a desirable density.

As will be noted the water from the reservoir passes through the opening 10 and contacts the upper disk 15, the water then permeating through the rest of the discs but the permeability of the plugs is such that it will not allow the water to pass to the edges of the same and expose the air in the container to liquid water. The cover near its bottom edge has a downwardly extending lip 18 to engage the open end of the humidor when the cover is in place and the humidor closed.

In the operation of the device the plugs are continuously moistened by the water placed in the reservoir. These asbestos millboard plugs can absorb from 50% to 75% of water by weight. Air comes in contact with the plugs through a series of holes or perforations in the side wall of the container, and in this manner the area of exposure can be varied to suit the volume of the tobacco container in question. Water flows from the reservoir to the plug and there vaporizes slowly at a rate defined by the temperature and the equilibrium moisture content of the plug material as fabricated. This water vapor reaches the air, and there mixes with the dry air in the container until a humidity of from 60% to 80% is attained or retained. The tobacco removes some of this water vapor from the air, thereby increasing in moisture content and this latter mechanism continues until the tobacco attains its equilibrium moisture content under the conditions maintained. Thus a condition of equilibrium has been established in which the tobacco receives water from the air only at the rate at which it can absorb it and no film of liquid water exists at any surface to permit the tobacco to reach a moisture content which will invite mold, mildew, or fermentation.

The invention is not limited to the exact form shown but may be varied within the scope of the following claims.

Also this application is a continuation in part of a former application filed May 9, 1938, Serial No. 206,774.

I claim:

1. A humidifying device comprising a perforated container, a liquid reservoir in connection with said container, and an element composed of mineral fibre compressed to such a density that there is never any free water existing at the surface of the element so as to prevent the flow of any liquid through said element except by such evaporation as is caused by the withdrawal of liquid through said element exerted by the demand for moisture of the material requiring moisture, said element being contained within said container and being in contact with the atmosphere through the perforations.

2. A humidifying device comprising a perforated container, a liquid reservoir in connection with said container, and an asbestos millboard element in said container and compressed to such density that there is never any free water existing at the surface of the element so as to prevent the flow of any liquid through such element except by such evaporation as is caused by the withdrawal of liquid through such element exerted by the demand for moisture of the material requiring moisture and to restore the moisture content needed by such material requiring moisture.

3. A humidifying device comprising a perforated container, a liquid reservoir in connection with said container, and an element composed of a plurality of plugs of mineral fibre each compressed to such density that there is never any free water existing at the surface of the element so as to prevent the flow of any liquid through said element except by such evaporation as is caused by the withdrawal of liquid through said element exerted by the demand for moisture of material requiring moisture, said plugs being contained within said container and being in contact with the atmosphere through the perforations.

ROBERT E. LAIDLEY.