PCT WORLD INTELLECTUAL PROPERTY ORGANIZATION
International Bureau

INTERNATIONAL APPLICATION PUBLISHED UNDER THE PATENT COOPERATION TREATY (PCT)

(51) International Patent Classification 5 :		(11) International Publication Number:
A61B 5/026, 5/14	A1	WO 92/15239
		(43) International Publication Date: 17 September 1992 (17.09.92)

(21) International Application Number: PCT/US92/00194

(22) International Filing Date: 13 January 1992 (13.01.92)

(30) Priority data:
664,262 4 March 1991 (04.03.91) US

(71) Applicant: KENSEY NASH CORPORATION [US/US]; Marsh Creek Corporate Center, 55 East Uwchlan Avenue, Suite 204, Exton, PA 19341 (US).

(72) Inventors: CHO, Young ; 8 Niamoa Drive, Cherry Hill, NJ 08003 (US). KENSEY, Kenneth ; 8 Hickory Lane, Chester Springs, PA 19425 (US).

(74) Agent: FAIGUS, Martin, L.; Caesar, Rivise, Bernstein, Cohen & Pokotilow, 12th Floor, Seven Penn Center, 1635 Market Street, Philadelphia, PA 19103-2212 (US).

(81) Designated States: AT (European patent), AU, BB, BE (European patent), BF (OAPI patent), BG, BJ (OAPI patent), BR, CA, CF (OAPI patent), CG (OAPI patent), CH (European patent), CI (OAPI patent), CM (OAPI patent), DE (European patent), DK (European patent), ES (European patent), FI, FR (European patent), GA (OAPI patent), GB (European patent), GN (OAPI patent), GR (European patent), HU, IT (European patent), JP, KP, KR, LK, LU (European patent), MC (European patent), MG, ML (OAPI patent), MR (OAPI patent), MW, NL (European patent), NO, RO, RU, SD, SE (European patent), SN (OAPI patent), TD (OAPI patent), TG (OAPI patent).

Published
With international search report.

(54) Title: APPARATUS AND METHOD FOR DETERMINING VISCOSITY OF THE BLOOD OF A LIVING BEING

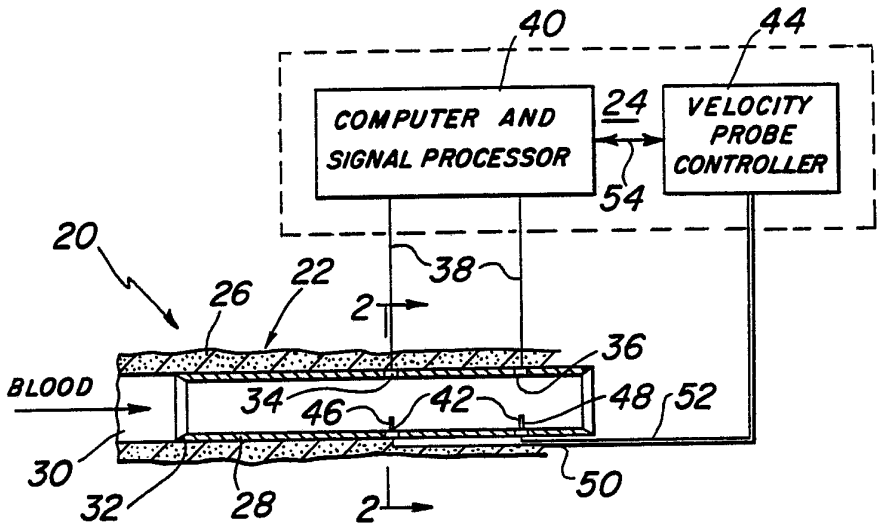

(57) Abstract

An apparatus (20) for determining the viscosity of the whole blood of a living being comprises a monitor unit (22) arranged to be coupled to a blood vessel (26) for monitoring the transit time of a portion of the blood when it flows through the vessel. In one embodiment the sampling unit (22) is implantable in the blood vessel (26) and uses a pair of transducers (34, 36) for measuring a pressure drop within the vessel, a device (42) for determining the instantaneous blood velocity therein, and circuitry (24) for calculating the blood viscosity. In another embodiment a sampling unit includes a needle (110) and associated syringe-like body (108), plural pairs of pressure transducers (120-122 and 126-128) and associated calculation circuitry (40) to determine the pressure drop at different flow rates so that blood viscosity can be calculated therefrom.

FOR THE PURPOSES OF INFORMATION ONLY

Codes used to identify States party to the PCT on the front pages of pamphlets publishing international applications under the PCT.

AT	Austria	**FI**	Finland	**ML**	Mali
AU	Australia	**FR**	France	**MN**	Mongolia
BB	Barbados	**GA**	Gabon	**MR**	Mauritania
BE	Belgium	**GB**	United Kingdom	**MW**	Malawi
BF	Burkina Faso	**GN**	Guinea	**NL**	Netherlands
BG	Bulgaria	**GR**	Greece	**NO**	Norway
BJ	Benin	**HU**	Hungary	**PL**	Poland
BR	Brazil	**IE**	Ireland	**RO**	Romania
CA	Canada	**IT**	Italy	**RU**	Russian Federation
CF	Central African Republic	**JP**	Japan	**SD**	Sudan
CG	Congo	**KP**	Democratic People's Republic of Korea	**SE**	Sweden
CH	Switzerland			**SN**	Senegal
CI	Côte d'Ivoire	**KR**	Republic of Korea	**SU**	Soviet Union
CM	Cameroon	**LI**	Liechtenstein	**TD**	Chad
CS	Czechoslovakia	**LK**	Sri Lanka	**TG**	Togo
DE	Germany	**LU**	Luxembourg	**US**	United States of America
DK	Denmark	**MC**	Monaco		
ES	Spain	**MG**	Madagascar		

APPARATUS AND METHOD FOR DETERMINING VISCOSITY OF THE BLOOD OF A LIVING BEING

Field of the Inventiion

This invention relates generally to medical instruments for and methods of determining the viscosity of the blood of a living being.

Background Art

Conventional wisdom in the medical community used to be that heart attacks and strokes are primarily attributable to severe narrowing of the arteries due to vascular disease, e.g., atherosclerosis and/or arteriosclerosis, but the underlying etiology remains unknown. Thus, today many investigators are focussing upon the blood's constituents, physical characteristics, and it effects (sometimes referred to as "hemodynamic effects") upon the vascular system and associated organs to identify heart attack/stroke risk factors and from that knowledge develop effective therapy. Moreover, the hemodynamic effects of the blood may, per se, play a roll in the etiology of arterial disease.

Thus, one characteristic of the blood now being investigated from a hemodynamic standpoint is the so-called "stickiness" of the blood. For example, a recent study of male doctors has revealed that the riskiest time for a heart attack is in the morning. It has been suggested by one investigator, Dr. Paul Ridker, that this increased risk of a heart attack is the result of the fact that the blood is stickiest in the morning.

If, in fact, increased blood viscosity is a factor in the etiology of vascular disease and/or the risk of heart attack or stroke, then apparatus and method for effectively determining the viscosity of the blood in real time, i.e., at virtually the same time that it is flowing through the body of the being, will be of considerable usefulness. Heretofore, measurement of blood viscosity has not been determined in real time. Instead it has been determined in-vitro with a substantial delay between the taking of the blood and its testing for viscosity. In this regard a blood sample is typically taken, via syringe, and the sample then sent to a

laboratory for analysis. The major drawback of this in-vitro technique is that it does not present an accurate picture of the blood's viscosity at the time that it is flowing through the vascular system. This inaccuracy is the result of various factors, e.g., viscosity may change as a result of the delay between the time the blood is withdrawn and tested and/or temperature changes from the time it is withdrawn until tested, and/or effects of contact with air, or other factors inherent in the in-vitro testing procedure.

Objects Of The Invention

Accordingly, it is the general object of this invention to provide apparatus and method of determining the viscosity of the blood of a living being which overcomes the disadvantages of the prior art.

It is a further object of this invention to provide apparatus and methods of determining the viscosity of the blood of a living being at substantially the time that such blood is flowing through the body of the being.

It is still a further object of this invention to provide apparatus for determining the viscosity of blood, which is simple in construction, easy to use, and which provides an accurate indication of blood viscosity as it exists within the living being.

Summary Of The Invention

These and other objects of the instant invention are achieved by providing apparatus and a method for determining the whole blood viscosity of a living being.

The apparatus basically comprises sampling means arranged to be coupled to a blood vessel of the being for monitoring a portion of the being's blood at substantially the time that that portion of the blood is flowing through the blood vessel to determine its viscosity.

In one embodiment of the apparatus the sampling means comprises a monitor unit arranged to be disposed within the blood vessel and comprising first means, e.g., a pair of solid state transducers, for determining a pressure differential between two longitudinally spaced apart points in the

vessel, and second means, e.g., another pair of solid state transducers, for determining the flow rate of said portion of the blood flowing through the vessel adjacent those points. The second means may take various forms, e.g., heating means for heating a first portion of the blood portion at a first (upstream) location within the vessel and sensing means located downstream of the heating means for sensing the temperature of that first portion of blood flowing thereby so that the flow rate can be determined.

In another embodiment of the apparatus the sampling means comprises penetration means, e.g., a needle, arranged to be inserted within the vessel and body means coupled to the penetration means. The body means is arranged to be disposed outside of the being's body to receive the portion of the blood flowing through the penetration means. In this embodiment the body means includes first means, e.g., at least one pair of solid state transducers, for determining a pressure differential between two longitudinally spaced apart points in the body means, and second means, e.g., a controllable displacement device, for establishing a flow rate of the blood through the body means so that the blood viscosity can be determined. Calculation means are also provided for calculating the blood's viscosity based on data developed from the first and second means.

Brief Description Of The Drawings

Other objects and many of the attendant advantages of this invention will be readily appreciated as the same becomes better understood by reference to the following detailed description when considered in connection with the accompanying drawings wherein:

Fig. 1 is a sectional view, partially schematic, showing an implantable embodiment of apparatus constructed in accordance with this invention for effecting in-vivo measurement of blood viscosity;

Fig. 2 is an enlarged sectional view taken along line 2 - 2 of Fig. 1;

Fig. 3 is a view similar to that of Fig. 1 but showing an alternative embodiment of apparatus constructed in accordance with this invention;

Fig. 4 is an enlarged sectional view taken along line 4 - 4 of Fig. 3; and

Fig. 5 is an enlarged sectional view taken along line 5 - 5 of Fig. 3

Detailed Description Of The Preferred Embodiment

Referring now in detail to the various figures of the drawing wherein like reference characters refer to like parts, there is shown at 20 in Fig. 1 apparatus constructed in accordance with one aspect of the subject invention. The apparatus 20 is arranged for effecting the in-vivo measurement of the viscosity of the blood of a living being and basically comprises a pair of components, namely, an implantable monitor unit 22, and an associated externally located control/analysis unit 24.

The monitor unit 22 will be described in detail later. Suffice it for now to state that it is arranged to be implanted within a suitable blood vessel 26 of the being. The monitor unit includes electrical leads, to be described later, connecting it to the control/analysis unit 24. That unit is arranged to be located outside the body of the being and serves to provide electrical signals to the monitor unit and to receive electrical signals therefrom. The control/analysis unit uses signals from the monitor unit to calculate the viscosity of the blood. In particular the blood viscosity is readily calculated by the control/analysis unit 24 using software in it, without requiring manual interaction.

The monitor unit 22 basically comprises a small diameter, e.g., 8 or 9 mm outside diameter, tube 28 formed of any material, e.g., stainless steel, suitable for location within the interior 30 of the being's blood vessel 26. The tube is preferably of very thin wall thickness, e.g., 0.5 mm, and its upstream end 32 is tapered so that blood can flow readily into its interior without interference by that end of the tube.

A pair of solid state, e.g., piezoelectric crystal, pressure transducers 34 and 36 are located within the sidewall of the tube 28 and are flush with the inner surface thereof. The transducers are longitudinally spaced from each other by a fixed, predetermined distance L, e.g., 2 cm. Each transducer is electrically coupled, via an associated conductor 38, to the external control/analysis unit 24 to provide signals indicative of the drop in the pressure of the blood in the distance L between the two transducers. In particular these signals, are provided to a computer and signal processor 40 forming a portion of the control/analysis unit 24. The computer and signal processor 40 can be of any suitable construction, e.g., a microprocessor and associated storage means, having software in it to effect the calculation of the viscosity from the electrical signals provided to it. Those signals constitute the pressure drop signals provided from the transducers 34 and 36, as well as electrical signals indicative of the instantaneous velocity of the blood adjacent the transducers and the other parameters (to be described later).

The signals indicative of the instantaneous velocity of the blood flowing through the tube 28 adjacent the transducers is provided by velocity sensing probe means 42 in the unit 22 and an associated velocity probe controller 44 located in the external unit 24. The velocity sensing probe means 42 basically comprises a pair of electrical resistance heating probes 46 and 48 projecting a short distance, e.g., 2 mm, radially inward into the interior of the tube 28 from the inner surface thereof. The probes are longitudinally spaced apart from each other by a predetermined distance, e.g., 2 cm. Each of the probes is connected via a pair of conductors 50 and 52 (although only one of each is shown in the interest of drawing simplicity) to the probe velocity controller 44. The probe velocity controller provides an electrical signal via conductors 50 to the upstram probe 46 to cause that probe to heat up quickly and thereby produce a heat pulse in the portion of the blood

flowing thereby. The propagation of the heat pulse to the downstream probe 48 resulting from the flow of the heated blood portion thereby is sensed by that probe and a signal indicative thereof is provided via conductors 52 to the probe velocity controller 44.

The controller 44 measures the delay or propagation time for the heat pulse produced in the blood by the upstream probe to reach the downstream probe and provides output signals via lines 54 to the computer and signal processor 40 to enable the instantaneous velocity of the blood, V, to be calculated thereby. To achieve that end the computer and signal processor 40 has stored therein data representing the distance separating the probes 46 and 48. From the instantaneous blood velocity, V, the computer and signal processor calculates the instantaneous flow rate, Q of the blood. To achieve that end the computer and signal processor 40 also has stored therein data representing the value of inner diameter D of the tube 28.

The instantaneous flow rate, Q, is calculated by the following formula:

$$Q = \frac{\pi V D^2}{4}$$

The computer and signal processor 40 also has stored therein data representing the value of the distance L separating the transducers 34 and 36. That data, together with the calculated instantaneous flow rate Q of the blood enables the computer and signal processor 40 to calculate the instantaneous viscosity of the blood. In particular the instantaneous blood viscosity, η, is calculated by the computer and signal processor 40 in accordance with the following formula, where D, $\blacktriangle P$ is the pressure drop between transducers 34 and 36, L is the distance between the transducers, and Q is the instantaneous blood volume flow rate:

$$\eta = \frac{\pi\ D^4 \blacktriangle P}{128\ LQ}$$

In Fig. 2 there is shown an alternative embodiment 100 of the subject invention. In this embodiment the apparatus does not include any implantable component for disposition within a blood vessel to effect the determination of the blood's viscosity by monitoring it as it flows naturally under the impetus of the heart's contractions. Instead the apparatus 100 effects the withdrawal of blood from the body of the being at a controlled rate and determines the blood's viscosity as it is being withdrawn.

As will be appreciated by those skilled in the art blood is a non-newtonian liquid, i.e., its viscosity varies with its shear rate. Accordingly, since the apparatus 100 does not calculate the blood's viscosity as it naturally flows through the being's blood vessel, the apparatus 100 is arranged to calculate the blood's viscosity at various shear rates to provide a more accurate representation of its value than if it was calculated based on only a single shear rate. Shear rate is the ratio of flow velocity to vessel diameter.

In any event the viscosity of the blood is calculated by the apparatus 100 within a very short period of time, e.g., from a few milliseconds to a second or two, after it has been withdrawn from the blood vessel. Accordingly, it can be said that the apparatus 100 provides the determination of the blood's viscosity at substantially the same time that it is flowing through the being's body and without the blood having time to cool or be exposed to air.

As can be seen in Fig. 2 the apparatus 100 basically comprises a sampling unit 102 and an associated control/analysis unit 104. The control/analysis 104 unit is similar to unit 24 in that it serves to provide electrical signals to the sampling unit 102 and to receive electrical signals therefrom. These signals are used by the control/analysis unit 104 to calculate the viscosity of the blood. Thus, the control/analysis unit 104 includes the heretofore identified and described computer and signal processor 40 and associated software utilizing the data and formulae discussed above. In

addition the control/analysis unit 104 includes a flow rate controller 106 (to be described later).

The sampling unit 102 basically comprises a syringe-like body 108 having a hypodermic needle 110 located at its free end. The needle 110 in arranged to be inserted through the skin of the being into the interior of his/her blood vessel 26 and the apparatus operated (as will be described later) to withdraw blood at a controlled rate from the vessel into the syringe-like body to provide signals indicative of flow rates and pressure drops in portions of the syringe-like body from which signals the control/analysis unit 104 calculates the viscosity of the blood.

The syringe-like body 108 includes a hollow rear portion 112, formed of any suitable material (e.g., glass) of relatively large inside diameter, e.g., 1.5 cm, and in which a moveable piston 114 is disposed. The front of the body is in the form of a pair of axially aligned, thin walled, tubes 116 and 118 which are in fluid communication with each other, with the hypodermic needle 110, and with the interior of the body portion 112. Thus, the tubes are secured to each other, the tube 118 secured to the body portion 112, and the hypodermic needle secured to the front of the tube 116.

As mentioned earlier the apparatus 100 is arranged to calculate the blood's viscosity at more than one flow rate. Thus, each of the tubes 116 and 118 forms a respective passageway through which the blood withdrawn by the apparatus 100 passes to enable its flow rate to be determined therein. The tube 116 is of smaller inner diameter than the tube 118 so that the flow rate through tube 116 will be greater than through tube 118. In a preferred embodiment of this invention the tube 116 has an inner diameter of from 2-3 mm and a length of 2 cm, while the tube 118 has an inner diameter of from 4-6 and a length of 3 cm. The tubes are formed of any suitable material, e.g., stainless steel.

The blood is caused to enter the apparatus 100 by the rearward movement of the piston 114 within the syringe body 112. The rate at which the piston is moved rearwardly

within the body 112 is constant and is established by driver means (to be described later) either under manual or computer control. Thus, with the piston moving to the rear of the syringe at a given rate the withdrawn blood will flow at different rates through the tubes 116 and 118, with the flow rate through the smaller diameter tube 116 being faster than the rate through the larger diameter tube 118.

A first pair of solid state, e.g., piezoelectric crystal, pressure transducers 120 and 122 are located within respective holes in the sidewall of the tube 116 so that they are flush with the inner surface thereof. The transducers are longitudinally spaced from each other by a fixed, predetermined distance, L, e.g., 1.5 cm. Each transducer is electrically coupled, via an associated conductor 124, to the computer and signal processor 40 in a manner like that described above to provide signals indicative of the drop in the pressure of the blood in the distance L between the two transducers as blood is withdrawn by the apparatus 100. A second pair of solid state, e.g., piezoelectric crystal, pressure transducers 126 and 128 are located within respective holes in the sidewall of the tube 118 so that they are flush with the inner surface thereof. These transducers are also longitudinally spaced from each other by the fixed, predetermined distance L. Moreover, each transducer is electrically coupled, via an associated conductor 130, to the computer and signal processor in a manner like that described above to provide signals indicative of the drop in the pressure of the blood in the distance L between the two transducers as blood is withdrawn by the apparatus 100.

The means for driving the piston 114 basically comprise a driver motor and an associated rack and pinion assembly 132. Signals to control the speed of operation of the drive motor and rack and pinon assembly are provided from the flow rate controller 106. The flow rate controller also provides signals indicative of the blood flow rate Q established by it to the computer and signal processor 40 so that

the viscosity of the blood may be calculated in accordance with the formula described above.

In accordance with a preferred embodiment of this invention the piston is operated at one of three different speeds in accordance with signals provided by the flow rate controller. These signals are established by either manual input 132 to the controller or by signals from the computer and signal processor 40. Thus, for each speed of movement of the piston two blood flow rates through the apparatus 100 are established. This feature enables the apparatus to calculate the viscosity of the blood at six flow rates (thus, at six shear rates) by merely changing the speed at which the piston is driven.

Without further elaboration, the forgoing will so fully illustrate our invention that others may, by applying current or future knowledge, readily adopt the same for use under various conditions of service.

CLAIMS

What is claimed is:

1. Apparatus for determining in vivo the viscosity of the whole blood of a living being, said apparatus comprising sampling means disposed within a blood vessel of said being for monitoring a portion of the blood of said being at substantially the time that said portion of said blood is flowing through said vessel to determine the viscosity thereof, wherein said sampling means comprises first means for determining a pressure differential between two longitudinally spaced apart points in said vessel, and second means for determining the flow rate of said portion of said blood flowing through said vessel adjacent said two longitudinally spaced apart points.

2. The apparatus of Claim 1 wherein said apparatus is arranged to maintain the temperature of said blood as it is monitored by said sampling means.

3. The apparatus of Claim 1 wherein said apparatus is arranged to isolate said portion of said blood from the ambient atmosphere.

4. The apparatus of Claim 2 wherein said apparatus is arranged to isolate said portion of said blood from the ambient atmosphere.

5. The apparatus of Claim 1 wherein said sampling means provides an electrical signal indicative of the viscosity of said blood.

6. The apparatus of Claim 2 wherein said sampling means provides an electrical signal indicative of the viscosity of said blood.

7. The apparatus of Claim 3 wherein said sampling means provides an electrical signal indicative of the viscosity of said blood.

8. The apparatus of Claim 4 wherein said sampling means provides an electrical signal indicative of the viscosity of said blood.

9. The apparatus of Claim 5 wherein said first means comprises a pair of solid state transducers.

10. The apparatus of Claim 6 wherein said first means comprises a pair of solid state transducers.

11. The apparatus of Claim 7 wherein said first means comprises a pair of solid state transducers.

12. The apparatus of Claim 8 wherein said first means comprises a pair of solid state transducers.

13. The apparatus of Claim 5 wherein said second means comprises first sensor means for heating said blood portion at a first location within said vessel, second sensor means located downstream of said first means for sensing a heat pulse propagated by said blood portion as it flows thereby to provide an indication of the instantaneous blood velocity.

14. The apparatus of Claim 6 wherein said second means comprises first sensor means for heating said blood portion at a first location within said vessel, second sensor means located downstream of said first means for sensing a heat pulse propagated by said blood portion as it flows thereby to provide an indication of the instantaneous blood velocity.

15. The apparatus of Claim 7 wherein said second means comprises first sensor means for heating said blood portion at a first location within said vessel, second sensor means located downstream of said first means for sensing a heat pulse propagated by said blood portion as it flows thereby to provide an indication of the instantaneous blood velocity.

16. The apparatus of Claim 8 wherein said second means comprises first sensor means for heating said blood portion at a first location within said vessel, second sensor means located downstream of said first means for sensing a heat pulse propagated by said blood portion as it flows thereby to provide an indication of the instantaneous blood velocity.

17. Apparatus for determining in vivo the viscosity of the whole blood of a living being, said apparatus comprising sampling means arranged to be coupled to a blood vessel of said being for monitoring a portion of the blood of said being at substantially the time that said portion of said blood is flowing through said vessel to determine the viscosity thereof, wherein said sampling means includes penetration means arranged to be disposed within said vessel and body means coupled to said penetration means, said body means being arranged to be disposed outside of the body of said being, said portion of said blood flowing through said penetration means into said body means, wherein said body means comprises first means for determining a pressure differential between at least two longitudinally spaced apart points therein, second means for establishing a flow rate of said portion of said blood flowing through said body means and passage means for establishing two different blood flow rates therethrough, wherein said first means determines said pressure differential for each of said two different blood flow rates.

18. A method of determining inh vivo the viscosity of the whole blood of a living being, said method comprising coupling the steps of:

(a) providing coupling means to a blood vessel of said being to monitor a portion of the blood of said being at substantially the time that said portion of said blood is flowing through said vessel to determine the viscosity thereof;

(b) extracting said portion of said blood from said being through said coupling means and into receiving means connected thereto;

(c) establishing at least two blood flow rates through said receiving means; and

(d) determining a pressure differential between two longitudinally spaced apart points in said receiving means for each of said at least two blood flow rates.

19. The method of Claim 18 additionally comprising maintaining the temperature of said blood as it is monitored by said means.

20. The method of Claim 18 additionally comprising isolating said portion of said blood from the ambient atmosphere as it is monitored by said means.

21. The method of Claim 19 additionally comprising isolating said portion of said blood from the ambient atmosphere as it is monitored by said means.

22. The method of Claim 18 wherein said method additionally comprises the step of determining the flow rate of said portion of said blood flowing through said vessel adjacent said two longitudinally spaced apart points in said receiving means.

23. The apparatus of Claim 17 wherein said sampling means provides an electrical signal indicative of the viscosity of said blood.

24. A method of determining in vivo the viscosity of the whole blood of a living being, said method comprising the steps of:

(a) disposing sampling means within a blood vessel of said being to monitor a portion of the blood of said being at substantially the time that said portion of said blood is flowing through said vessel to determine the viscosity thereof;

(b) determining a pressure differential between two longitudinally spaced apart points in said vessel by said sampling means, and;

(c) determining the flow rate of said portion of said blood flowing through said vessel adjacent said two longitudinally spaced apart points by said sampling means.

FIG. 1

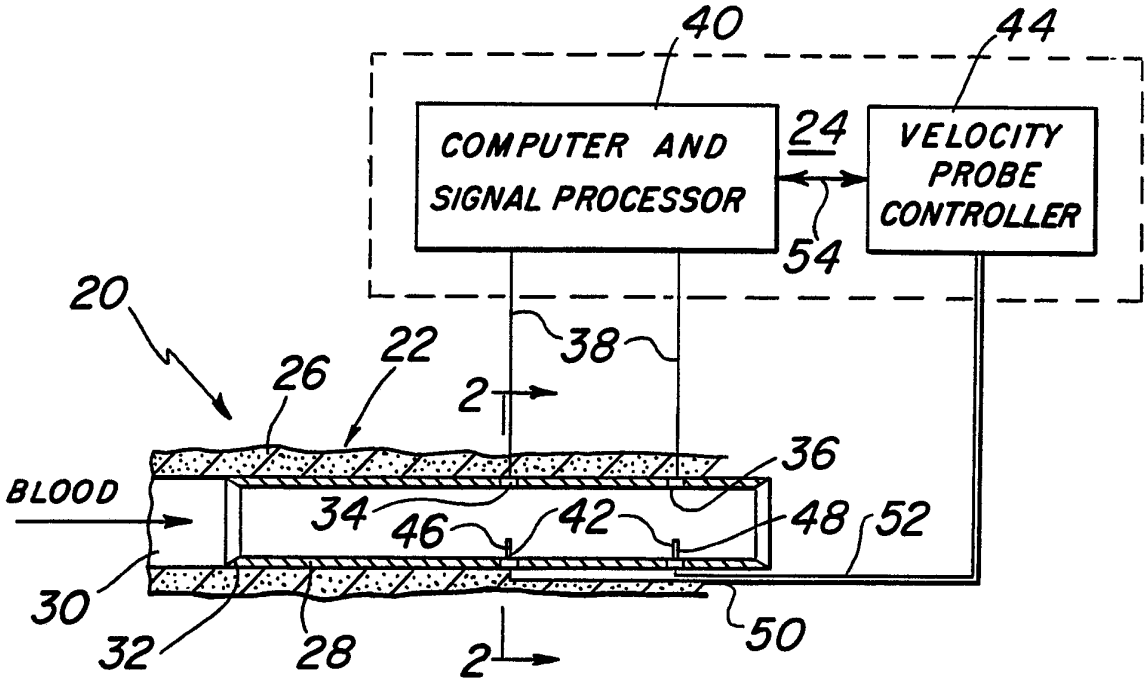
40
44
COMPUTER AND SIGNAL PROCESSOR
24
VELOCITY PROBE CONTROLLER
54
20
38
26
22
2
36
BLOOD
34
46
42
48
52
30
32
28
2
50

FIG. 2

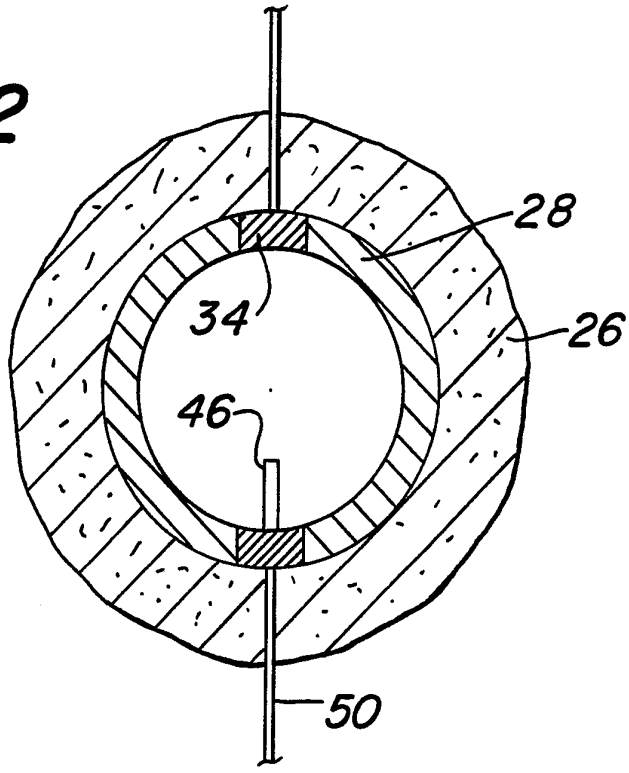
28
34
26
46
50

FIG. 3

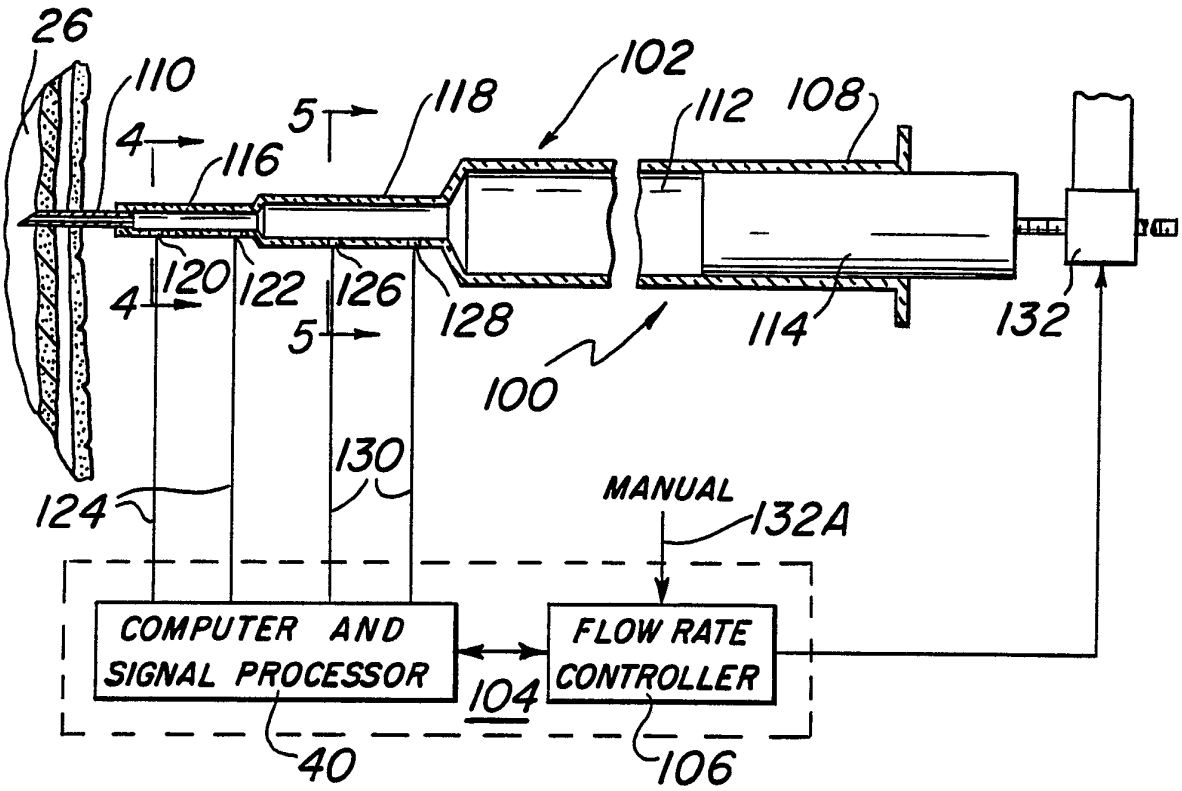

FIG. 4

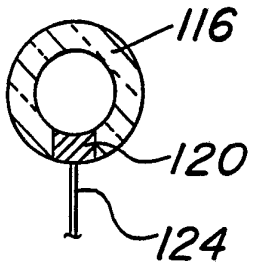

FIG. 5

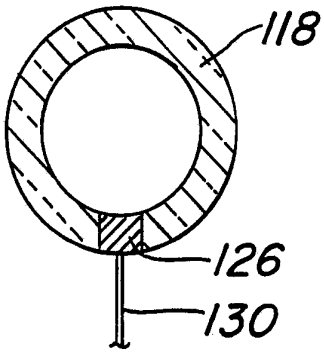

INTERNATIONAL SEARCH REPORT

International Application N PCT/US 92/00194

I. CLASSIFICATION OF SUBJECT MATTER (if several classification symbols apply, indicate all)[6]

According to International Patent Classification (IPC) or to both National Classification and IPC

Int.Cl. 5 A61B5/026; A61B5/14

II. FIELDS SEARCHED

Minimum Documentation Searched[7]

Classification System	Classification Symbols
Int.Cl. 5	A61B

Documentation Searched other than Minimum Documentation to the Extent that such Documents are Included in the Fields Searched[8]

III. DOCUMENTS CONSIDERED TO BE RELEVANT[9]

Category °	Citation of Document,[11] with indication, where appropriate, of the relevant passages[12]	Relevant to Claim No.[13]
X	FR,A,2 345 716 (G. WEBER + S. PETER) 21 October 1977	1-12
X	see page 5, line 4 - page 9, line 1	17-24
Y	EP,A,0 126 931 (LELAND STANFORD JR. UNIVERSITY) 5 December 1984	1
A	see page 9, line 25 - page 13, line 2	13-16,22
Y	US,A,4 621 646 (G.H. BRYANT) 11 November 1986	1
A	see column 3, line 5 - column 4, line 16	17,24

° Special categories of cited documents :[10]

"A" document defining the general state of the art which is not considered to be of particular relevance

"E" earlier document but published on or after the international filing date

"L" document which may throw doubts on priority claim(s) or which is cited to establish the publication date of another citation or other special reason (as specified)

"O" document referring to an oral disclosure, use, exhibition or other means

"P" document published prior to the international filing date but later than the priority date claimed

"T" later document published after the international filing date or priority date and not in conflict with the application but cited to understand the principle or theory underlying the invention

"X" document of particular relevance; the claimed invention cannot be considered novel or cannot be considered to involve an inventive step

"Y" document of particular relevance; the claimed invention cannot be considered to involve an inventive step when the document is combined with one or more other such documents, such combination being obvious to a person skilled in the art.

"&" document member of the same patent family

IV. CERTIFICATION

Date of the Actual Completion of the International Search	Date of Mailing of this International Search Report
03 JUNE 1992	30. 06. 92
International Searching Authority	**Signature of Authorized Officer**
EUROPEAN PATENT OFFICE	RIEB K.D.

Form PCT/ISA/210 (second sheet) (January 1985)

ANNEX TO THE INTERNATIONAL SEARCH REPORT ON INTERNATIONAL PATENT APPLICATION NO. US 9200194 SA 56826

This annex lists the patent family members relating to the patent documents cited in the above-mentioned international search report. The members are as contained in the European Patent Office EDP file on 03/06/92
The European Patent Office is in no way liable for these particulars which are merely given for the purpose of information.

Patent document cited in search report	Publication date	Patent family member(s)	Publication date
FR-A-2345716	21-10-77	DE-A- 2613212	06-10-77
		DE-A- 2658799	29-06-78
		CH-A- 614046	31-10-79
		GB-A- 1566154	30-04-80
		JP-A- 53004588	17-01-78
		NL-A- 7703231	29-09-77
		SE-A- 7703449	28-09-77
		US-A- 4165632	28-08-79
EP-A-0126931	05-12-84	US-A- 4507974	02-04-85
		CA-A- 1210509	26-08-86
		JP-A- 60034430	22-02-85
US-A-4621646	11-11-86	None	