United States Patent [19]

Freeman

[11] **Patent Number: Des. 305,299**

[45] **Date of Patent: ** Jan. 2, 1990**

[54] **WREATH HANGER FOR A GRAVE STONE OR SIMILAR ARTICLE**

[76] Inventor: **George V. Freeman,** 115 Linden St., Hamilton, Mass. 01982

[**] Term: **14 Years**

[21] Appl. No.: **116,268**

[22] Filed: **Nov. 2, 1987**

[52] **U.S. Cl.** **D8/373;** D8/371; 248/214; 248/215; 248/27.8

[58] **Field of Search** D14/367, 373, 371, 370; 248/215, 214, 27.8, 301

[56] **References Cited**

U.S. PATENT DOCUMENTS

D. 285,410	9/1986	Webber	D8/373 X
D. 290,931	7/1987	Powell	D8/371 X
D. 301,012	5/1989	Possemato	D8/373
607,096	7/1898	Thacher	248/215
712,492	11/1902	Broga	248/215
815,813	3/1906	Graham	248/215 X
895,047	8/1908	Schraudner	248/215 X
1,447,636	3/1923	White	248/301
2,743,023	4/1956	Larson	248/215 X
3,145,847	8/1964	Clement	248/27.8 X
3,181,827	5/1965	Sassin	248/301 X
3,279,620	10/1966	Nesbitt	248/214 X
3,310,911	3/1967	Boser et al.	248/27.8 X
3,511,461	5/1970	Clark	248/27.8
3,907,118	9/1975	Pelavin	248/214 X
4,042,200	8/1977	Overall	248/214 X
4,059,248	11/1977	Kuntz	248/214
4,138,019	2/1979	Smith	248/214 X
4,584,813	4/1986	Hudson	248/214 X
4,709,891	12/1987	Barnett	248/214

FOREIGN PATENT DOCUMENTS

101408	6/1938	Sweden	248/215

Primary Examiner—Horace B. Fay, Jr.
Attorney, Agent, or Firm—Edward A. Gordon

[57] **CLAIM**

The ornamental design for wreath hanger for a grave stone or similar article, as shown and described.

DESCRIPTION

FIG. **1** is a left side, top and front perspective view of a wreath hanger for a grave stone or a similar article showing my new design, and it is understood that a perspective view taken 180° opposite FIG. **1** is a mirror image thereof;

FIG. **2** is a top plan view thereof; and

FIGS. **3** and **4** are respectively front and rear elevational views thereof.

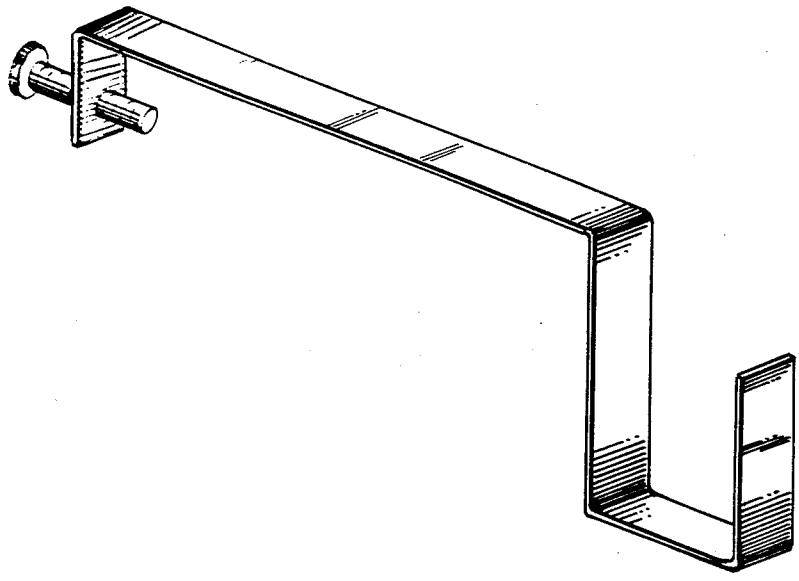

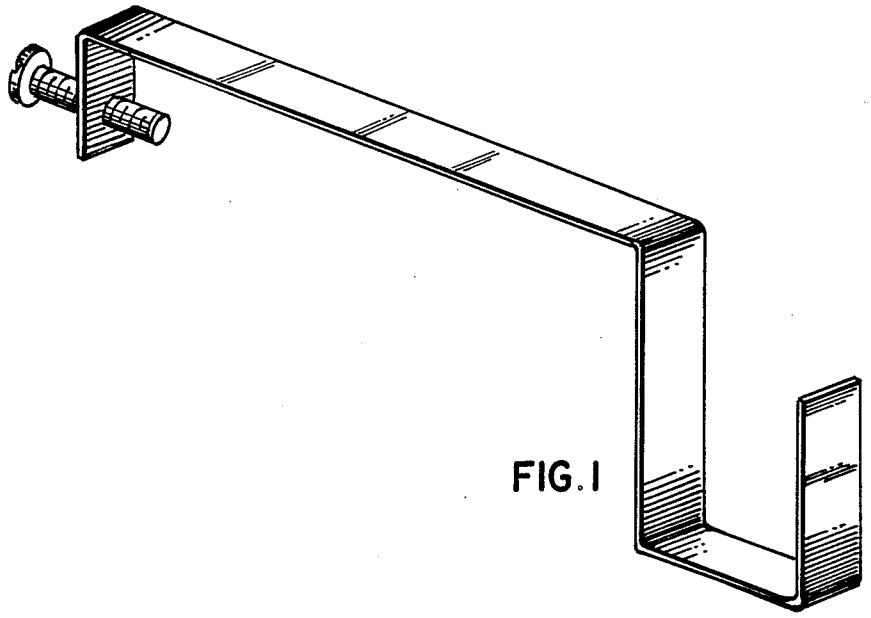

FIG. 1



FIG. 2



FIG. 3



FIG. 4