United States Patent [19]

Stelzer et al.

[11] **3,805,606**

[45] **Apr. 23, 1974**

[54] **METHOD AND APPARATUS FOR TRANSMISSION OF DATA FROM DRILL BIT IN WELLBORE WHILE DRILLING**

[75] Inventors: **Roland B. Stelzer; Jack H. Park; Herbert A. Rundell,** all of Houston, Tex.

[73] Assignee: **Texaco, Inc.,** New York, N.Y.

[22] Filed: **Aug. 11, 1972**

[21] Appl. No.: **279,898**

[52] **U.S. Cl.** **73/152**

[51] **Int. Cl.** **E21b 47/12,** 175 40;50

[58] **Field of Search** ..... 73/151, 152, 136 R

[56] **References Cited**

UNITED STATES PATENTS

2,775,889	1/1957	Decker	73/151
3,581,564	6/1971	Young, Jr.	73/151

Primary Examiner—Jerry W. Myracle

Attorney, Agent, or Firm—T. H. Whaley; C. G. Ries

[57] **ABSTRACT**

A method and several mechanisms for carrying out the method are disclosed. The method of (1) generating torque pulses by engaging a drill bit on the lower end of a rotating drill string in the bottom of a wellbore, and (2) monitoring the top of the drill string for the torque pulses therein may be practiced by a drill bit disconnectably attached with a coupling to the lower end of a drill string in a wellbore for being momentarily and precisely uncoupled and coupled during drilling to interrupt the torque transmission for generation of torque pulses in the drill string for being monitored at the surface. Mechanical, electrical, and fluid operated couplings are disclosed for rapidly coupling and uncoupling the drill bit from the drill string.

17 Claims, 5 Drawing Figures

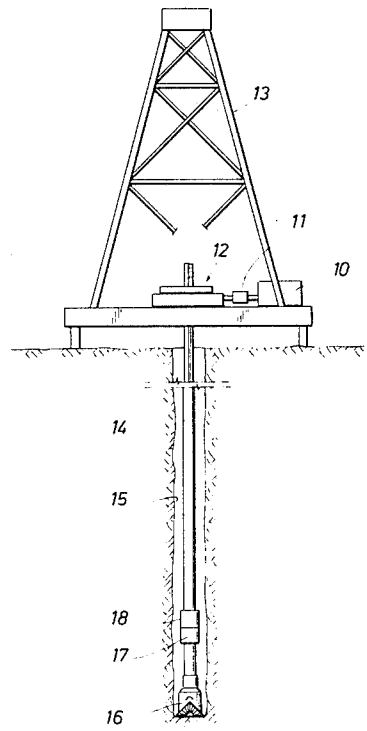

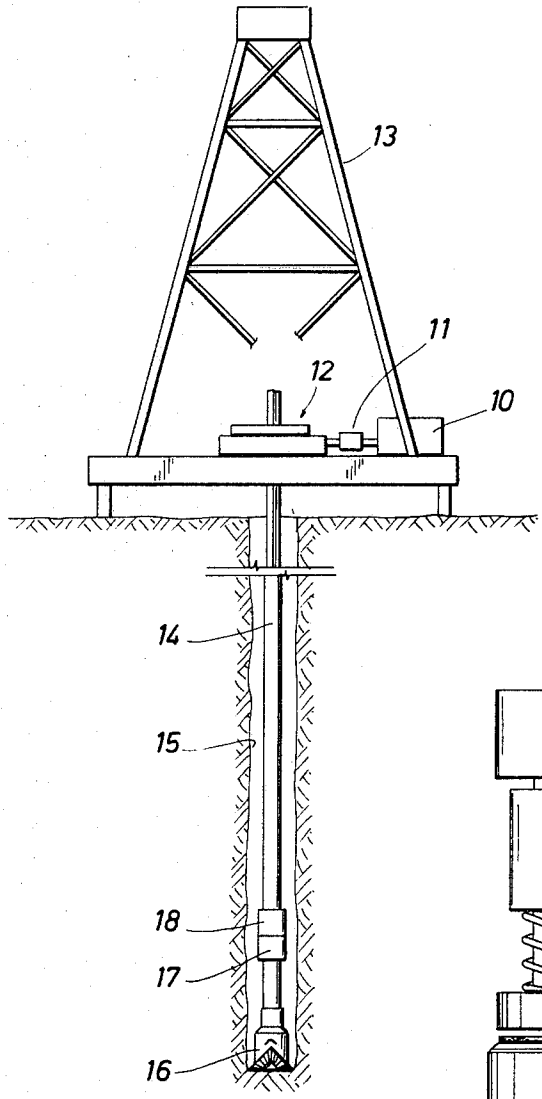

FIG. 1

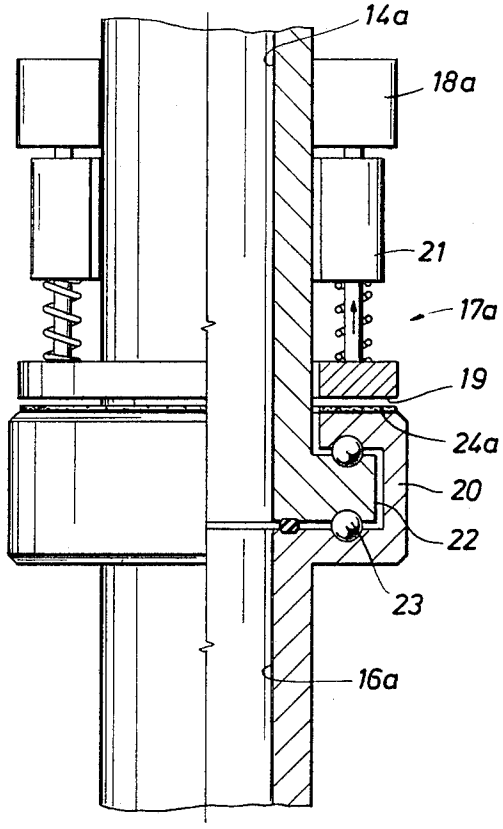

FIG. 2

FIG. 3

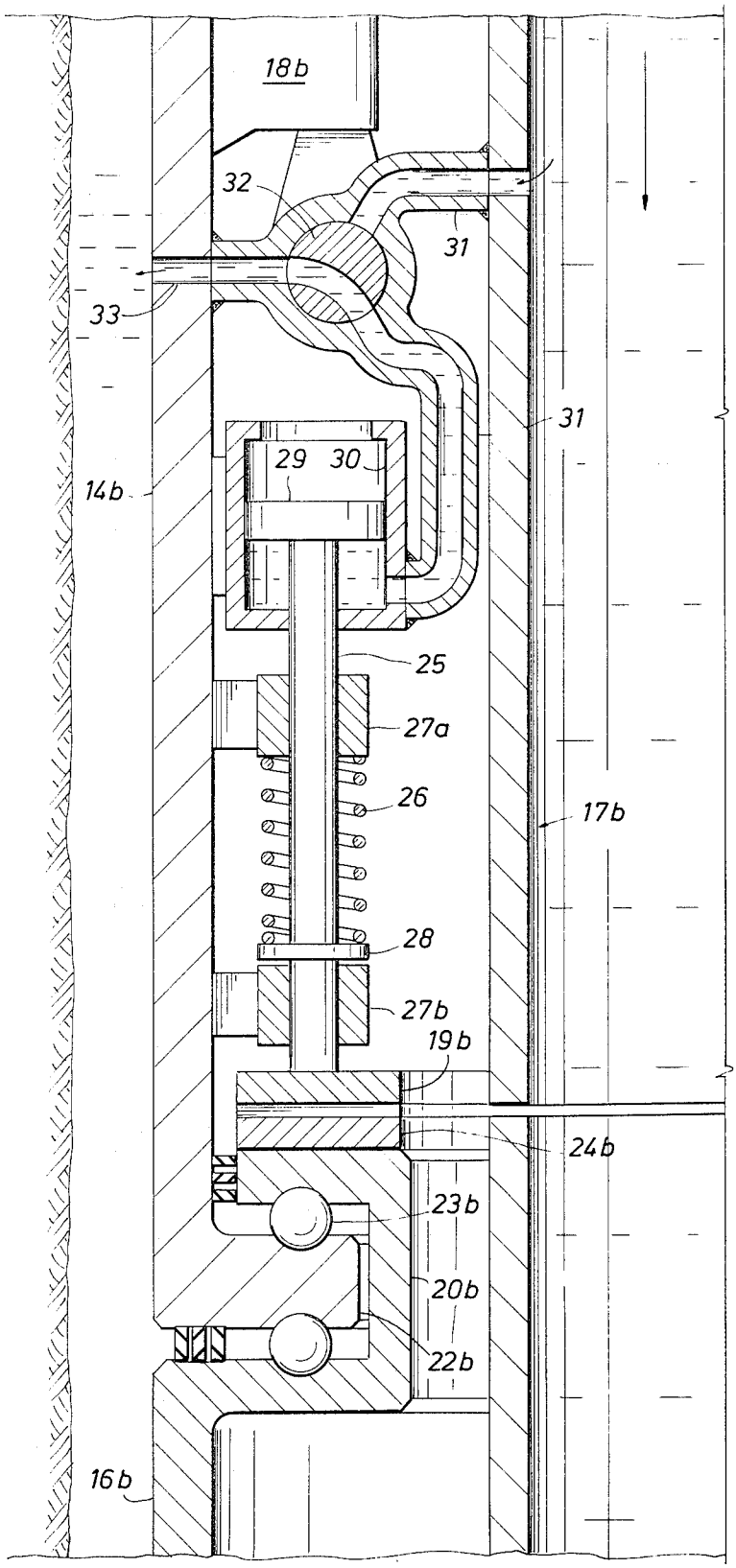
18b
32
31
33
31
29
30
14b
25
27a
26
17b
28
27b
19b
24b
23b
20b
22b
16b

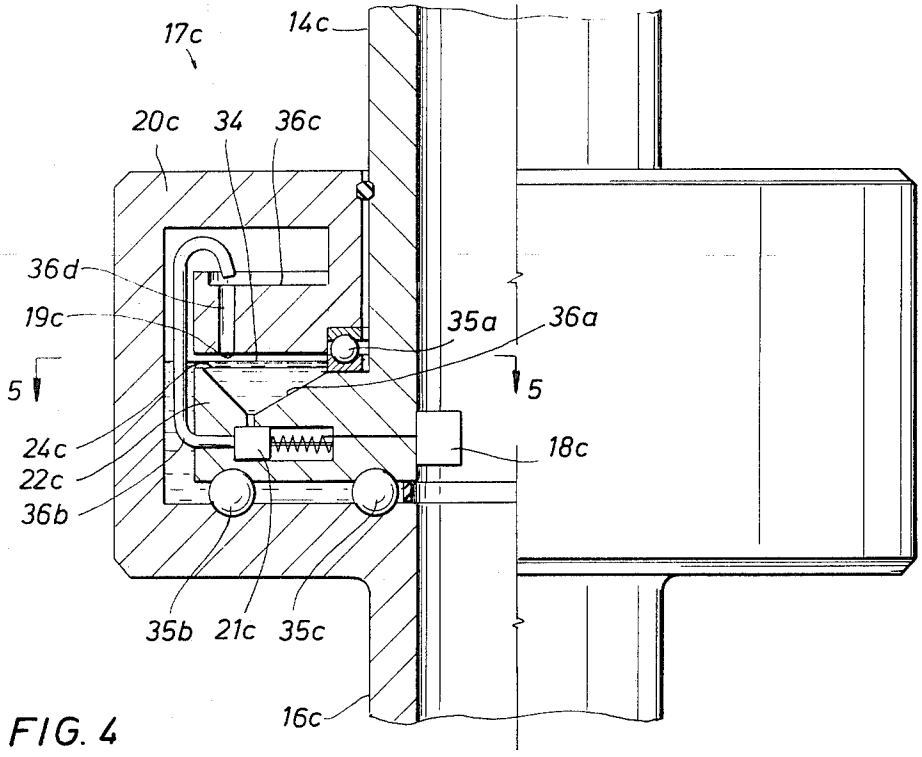
17c
14c
20c
34
36c
36d
19c
35a
36a
5
5
24c
22c
36b
18c
35b
21c
35c
16c

FIG. 4

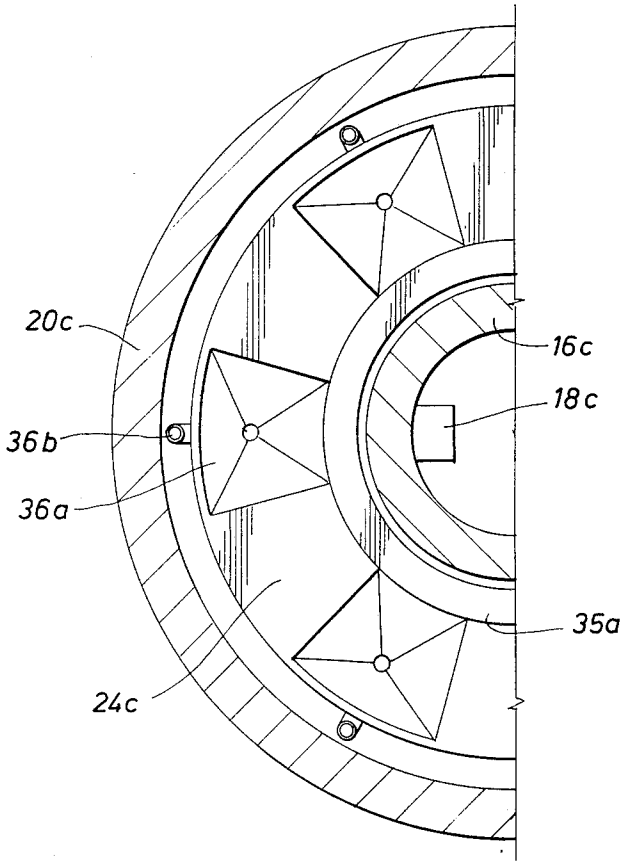
20c
16c
18c
36b
36a
35a
24c

FIG. 5

METHOD AND APPARATUS FOR TRANSMISSION OF DATA FROM DRILL BIT IN WELLBORE WHILE DRILLING

BACKGROUND OF THE INVENTION

While drilling wells, such as wells for the recovery of petroleum from subsurface petroleum containing formations, there are many measurements which are desired by people doing the drilling for determining the lithology being encountered as the wellbore progresses deeper and deeper into the earth. The usual practice today during the drilling of oil and gas wells is to interrupt the drilling operation periodically, to pull the entire drill string from the wellbore, and to run logging tools down into the wellbore for determining the types of earth formations which have been penetrated by the wellbore and the characteristics of such formation layers indicative of the presence of petroleum deposits prior to running the entire drill string back into the wellbore. As the well gets deeper and deeper, the time required for the removal and rerunning of this drill string, known in the industry as a trip, becomes greater and greater. Some wells are so deep as to require twenty-four hours to make a trip, plus many additional hours for the running of a logging tool into the formation. Further it has long been realized that it would be highly desirable to perform certain basic logging operations during the course of the drilling operation, and to transmit such information back up to the surface either periodically or continually. If this were possible, it would permit a complete record of the subsurface lithology to be accumulated as the drilling proceeds and would not necessitate the delay of drilling operations for the running of logs.

Thus it would be very advantageous, during drilling operations of a borehole, to possess a signal system for the transmission of information from the area of the bottom of the wellbore or the drill bit to the surface using the most convenient continuous communications line available, the drill string, as the communication medium. For many types of information, the signal does not have to be transmitted continuously during drilling, but can be transmitted at certain intervals. Exemplary information that is needed very urgently at the surface during drilling are borehole deviation, information from drilling tests stored in a memory unit or a warning signal, as a pressure difference detected, and stored when drilling through a gas zone. Thus during drilling it would be desirous to obtain this information as soon as possible.

While a prior signal transmission system comprises modulation of mud pressure or mud flow by a variable valve in the mud conduit in the bottom of the drill pipe, such as in U.S. Pat. No. 2,978,634, this system is not reliable due to sticking of the valve because of the solids in the mud and due to failure of the valve because of the abrasion thereof by the mud per se. Another prior but different data transmissions system comprises a controllable wellbore wall engaging means extendable transversely from the sides of the drill stem for momentarily increasing the drag or torque in the drill pipe while rotating the drill pipe for sending torque pulses to the surface through the drill string. This latter system is disclosed in patent application Ser. No. 279,899 filed concurrently herewith by the same Assignee.

OBJECTS OF THE INVENTION

Accordingly, a primary object of this invention is to provide a reliable method for transmission of data from the bottom of a wellbore to the top while drilling.

Another primary object of this invention is to provide a data transmission system for practicing or carrying out the above method.

A further object of this invention is to provide a data transmission system utilizing a drill bit that may be coupled and uncoupled to the drill string for precise interruption of torque forces therein when drilling for transmitting torque pulses for detection at the top of the drill string.

Still another object of this invention is to provide a data transmission system utilizing a drill bit that is coupled and uncoupled to a drill string with a solenoid actuated spring clutch while drilling;

Another object of this invention is to provide a data transmission system utilizing a drill bit that is coupled and uncoupled to a drill string with a mechanically actuated spring clutch while drilling;

Yet another object of this invention is to provide a data transmission system utilizing a drill bit that is coupled and uncoupled to a drill string with a fluid clutch while drilling;

A still further object of this invention is to provide a data transmission system for continuous transmission of data from a downhole tool while drilling which is easy to operate, is of simple configuration, is economical to build and assemble, and is of greater efficiency for generating signals from a rotating drill bit deep in a well to the surface.

BRIEF DESCRIPTION OF THE DRAWINGS

The drawings diagrammatically illustrate by way of example, not by way of limitation, three forms or mechanisms for carrying out the method of the invention wherein like reference numerals have been employed to indicate similar parts in the several views in which:

FIG. 1 is a schematic vertical view of the invention with parts in section for clarity of disclosure;

FIG. 2 is a modification of FIG. 1 having a solenoid operated clutch illustrated schematically in section;

FIG. 3 is another modification of FIG. 1 having a mechanically operated clutch illustrated schematically in section;

FIG. 4 is another modification of FIG. 1 having a fluid clutch illustrated schematically in section; and

FIG. 5 is a section at 5—5 on FIG. 4.

DESCRIPTION OF THE INVENTION

The invention disclosed herein, the scope of which being defined in the appended claims, is not limited in its application to the details of construction and arrangements of parts shown and described for carrying out the disclosed method, since the invention is capable of other embodiments for carrying out other methods and of being practiced or carried out in various other ways. Also, it is to be understood that the phraseology or terminology employed herein is for the purpose of description and not of limitation. Further, many modifications and variations of the invention as hereinbefore set forth will occur to those skilled in the art. Therefore, all such modifications and variations which are within the spirit and scope of the invention herein

are included and only such limitations should be imposed as are indicated in the appended claims.

DESCRIPTION OF THE METHOD

A method is set forth for transmitting data from the bottom of a drill string in a wellbore during drilling thereof to the top of the wellbore comprising the steps of,

1. generating torque pulses by engaging a drill bit on the lower end of the drill string in the bottom of the wellbore, and

2. monitoring the top of the drill string for the torque pulses therein.

For greater details, the first step may comprise:

1. interrupting the turning of a drill bit on a drill string during drilling to generate torque pulses in the drill string.

The first step may be modified further as:

1. coupling and uncoupling a drill bit on the lower end of a rotating drill string, and

2. controlling the coupling and uncoupling of the drill bit to the drill string for generating the precise torque pulses in the drill string.

More details of the second step of the basic method comprise:

1. monitoring the time modulation between the torque pulses in the drill string.

The torque pulses may be either positive or negative.

Further details of the second basic step comprises:

1. monitoring the time modulation of either the length of the time between the pulses, or the number of pulses in the drill string due to interruptions in the drill bit rotation.

DESCRIPTION OF APPARATUSES OR SYSTEMS OF DATA TRANSMISSION FROM A WELLBORE WHILE DRILLING

The drawings disclose several embodiments of the invention for carrying out or practicing the above described method for transmittig intelligence from the bottom of a wellbore of conditions at the bottom to the surface while drilling is in progress.

FIG. 1 discloses schematically a system for carrying out the basic method of data transmission from a wellbore during drilling operations.

A suitable motor 10 drives a rotary table 12 with a sensitive torque meter 11 connected there-between under drilling rig 13. A drill string 14 in wellbore 15 is rotated at its upper end by the rotary table 12 and has a drill bit 16 detachably connected to its lower end.

A feature of the invention is the connection or coupler 17 controlled by a conventional controller 18 for uncoupling and coupling the drill bit while drilling for varying the torque in the drill string for generating torque pulses proportional to the wellbore information desired to be transmitted. These torque variations or torque pulses generated in the lower end of the drill string by the uncoupling and coupling of the drill bit 16 from the drill string 14 in precisely timed intervals representing well bottom data from the controller 18 are transmitted up through the drill string, through the rotary table 12 to the sensitive torque meter 11 where the data is received. This torque meter is any suitable torque meter, such as but not limited to the Texaco Torque Meter disclosed in U.S. Pat. No. 3,295,367 by Rundell. Controller 18 is a conventional detector of temperature, pressure, weight on the bit, or of other logging parameters such as SP (self potential) or resistivity for operating the coupler 17 off and on for generating torque pulses modulated in proportion to the data transmitted, such as but not limited to a conventional logging pulse generator.

FIG. 2, a vertical sectional view of a modified coupler 17*a* between drill string 14*a* and drill bit 16*a*, illustrates an electrically actuated coupler as including a clutch comprising an annular wear plate 19 on drill string 14*a* spring urged in engagement with an annular friction wear plate 24*a* on top of annular channel 20 of the drill bit 16*a* for locking the drill bit to the drill string. A solenoid 21, likewise attached to the drill string 14*a*, raises the wear plate 19, when actuated, to uncouple and free the drill bit from the drill string for suddenly reducing the torque in the drill string due to the resistance to rotation by the drill bit when drilling in the bottom of the wellbore. A suitable electrical power source as a bank of batteries (not shown) is mounted on the drill string for driving the solenoid 21. The rotary connection portion of the coupler 17*a* comprises an inwardly projecting flange 22 on the lower end of the drill string 14*a* rotatably mounted with bearings 23 internally of the annular channel 20. The controller 18*a* for the coupler 17*a* is similar to controller 18 except 18*a* is designed for cutting the solenoid 21 off and on for engaging and disengaging the clutch 19 for generating torque pulses modulated in time between pulses, for example, for being detected at the surface by torque meter 11, FIG. 1. Tongue and groove or gear teeth may be utilized in place of the friction wear plates 19 and 24*a* if so desired since the two members are in positive engagement during ordinary drilling. While only one solenoid is illustrated, any suitable number may be utilized to provide the required force.

FIG. 3 illustrates another data transmission system comprising another modified coupler 17*b* shown in a vertical sectional view with parts in section between drill string 14*b* and drill bit 16*b*. This modification comprises a spring urged clutch which is released by a high pressure piston and valve system. In the coupler 17*b* the lower end of drill string 14*b* has inwardly projecting annular flange 22*b* rotatably mounted with ball bearings 23*b* in annular channel 20*b* on the upper end of drill bit 16*b*. A fluid-spring clutch comprises the upper portion of the coupler 17*b* wherein a drill string friction wear plate 19*b* on the lower end of piston rod 25 is urged in contact with drill bit friction wear plate 24*b* by compression spring 26 mounted around the piston rod between upper piston rod guide 27*a* and piston rod flange 28. A piston rod lower guide 27*b*, as well as piston rod upper guide 27*a* are mounted on the lower end of drill string 14*b*. A piston 29 on the upper end of piston rod 25 is operatable in a cylinder 30. A high pressure drilling fluid mud conduit 31 extends from the center of the drill string 14*b* to the cylinder 30 with a three-way valve 32 therein operable by a conventional controller 18*b* similar to the disclosed controller 18 of FIG. 1. An exhaust passage 33 exhausts the mud from the cylinder. Friction wear plates 19*b* and 24*b* may be tongue and groove surfaces or gear teeth if so desired for decreasing the slippage between the two for ordinary drilling. A torque meter (not shown) similar to 11 of FIG. 1 is provided at the top of the drill string 14*b* for detecting torque pulses in the drill string.

In operation of the embodiment of FIG. 3, as the controller 18*b* receives information and opens and closes mud flow valve 32 in precise modulated time intervals, first during drilling, the high pressure mud flow is valved to the cylinder 30 to raise piston 29 and its piston rod 25 against the action of spring 26 for disconnecting friction plates 19*b*, 24*b* so that drill bit 16*b* is uncoupled from drill string 14*b* resulting in a sudden decrease in torque in the drill string which is detected at the surface by the torque meter. Then in timed sequence, the mud valve 32 is rotated rapidly to exhaust the cylinder mud outside the drill string to the returning drilling fluid with formation cuttings, the spring biased piston rod 25 snapped downwardly by the spring action, and clutch plates 19*b*, 24*b* engaged to accordingly couple the drill bit 16*b* to the drill string 14*b* generating a sudden increase in torque in the drill string for forming a torque pulse detected at the surface in the torque meter for the transmission of data from the area of the drill bit to the surface. While only one piston and rod are illustrated, any suitable number may be utilized to provide the force required.

FIG. 4, a schematic sectional view of another embodiment of the invention for carrying out the above disclosed method, comprises a conventional fluid clutch for use as a coupler 17*c* for coupling and uncoupling the drill bit 16*c* from the drill string 14*c*.

More specifically, a controller 18*c*, similar to controller 18 of FIG. 1, and mounted on the lower end of the drill string 14*c* is operatively connected to a solenoid valve 21*c* having a suitable and conventional stored power source (not shown) in the drill string. A conventional fluid clutch is formed between the drill string 14*c* and the drill bit 16*c* in the form of two similar rough surfaced plates 19*c* and 24*c* being interconnected with a suitable fluid 34.

In FIGS. 2 and 4, the coupler portions 17*a* and 17*c* are illustrated as being enlarged for clarity of disclosure only. Obviously, in the production drill string, the couplers have a diameter equal to or less than that of the drill bit, as illustrated in the embodiments of FIGS. 1 and 3.

FIG. 5, a view at 5—5 on FIG. 4, illustrates one of the two similar rough surfaces, 24*c*.

An outwardly projecting annular flange 22*c* on the lower end of drill string 14*c* is enclosed by the annular channel 20*c* formed on the top of drill bit 14*c*. The channel 20*c* is partially filled with a conventional hydraulic oil 34 up to a level intermediate the two rough surfaced plates 19*c* and 24*c*, only the latter surface being submerged when in the uncoupled position illustrated. Seals 35*a*, 35*b*, and 35*c* seal the liquid in the channel. The flange 22*c* has a recess or well 36*a* therein beneath the roughened or cutaway plate 24*c* with a conduit 36*b* extending from the bottom of the recess outward out of the flange 22*c*, upwardly into a trough 36*c* in annular channel 20*c*, from which ducts 36*d* extend down through the channel to empty into liquid in the well 36*a*. The solenoid valve 21*c* in conduit 36*b* is spring biased open when the current is cut off by controller 18*c* and the solenoid valve is closed when the circuit is closed.

In operation of the embodiment of FIGS. 4 and 5, the drill bit is uncoupled from drill string 16*c* by activation of the solenoid valve 21*c* closed by controller 18*c*. In order to couple the drill bit 14*c* with the rotating drill string 16*c*, solenoid valve 21*c* is actuated to the spring biased open position. As the drill string flange 22*c* is rotated, centrifugal force forces the liquid in well 36*a* to flow out of the well, up the conduit 36*b*, into trough 36*c*, down through the ducts 36*d* to raise the liquid level to the upper plate 19*c*, and thus through the fluid friction action rotate channel 20*c* and the drill bit 16*c* with rotating drill string 14*c*. Thus as the controller receives information to be transmitted to the surface during drilling, it causes the drill bit to disengage and engage from the rotating drill string for generating torque pulses modulated in time between pulses, for example, for being transmitted up through the drill string to the sensitive torque meter on the surface.

Accordingly, it will be seen that while drilling is in progress, the disclosed method and three data transmission systems will transmit information from the drill bit in the bottom of a wellbore and will operate in a manner which meets each of the objects set forth hereinbefore.

While only one method of the invention and three mechanisms for carrying out the method have been disclosed, it will be evident that various other methods and modifications are possible in the arrangement and construction of the disclosed method and data transmission systems without departing from the scope of the invention and it is accordingly desired to comprehend within the purview of this invention such modifications as may be considered to fall within the scope of the appended claims.

We claim:

1. A method for transmitting data from the bottom of a drill string in a wellbore during drilling thereof to the top of the drill string comprising the steps of,

a. generating data by making desired measurements near the bottom of the drill string,

b. generating torque pulses relative to the generated data by interrupting engagement of a disconnectable drill bit on the lower end of the drill string in the bottom of the wellbore, and

c. monitoring the top of the drill string for the time modulation of the torque pulses therein.

2. A method as recited in claim **1** wherein the second step comprises,

a. coupling and uncoupling a drill bit on the lower end of the rotating drill string for generating the torque pulses of the drill string.

3. A method as recited in claim **1** wherein the second step comprises,

a. coupling and uncoupling a drill bit on the lower end of the rotating drill string, and

b. controlling the coupling and uncoupling of the drill bit to the drill string for generating the torque pulses in the drill string.

4. A method as recited in claim **1** wherein the third step comprises,

a. monitoring the time modulation of the torque pulses in the drill string from the drill bit.

5. A method for transmitting data from a drill bit on the bottom of a drill string in a wellbore during drilling thereof to the top of the drill string comprising the steps of,

a. generating data by making desired measurements near the bottom of the drill string,

b. interrupting the turning of a drill bit during drilling to generate torque pulses in the drill string, and

c. monitoring the time modulation of the pulses in the top of the drill string.

6. A method as recited in claim 5 wherein the second step comprises,

a. coupling and uncoupling the drill bit on the lower end of the rotating drill string for generating the torque pulses in the drill string.

7. A method as recited in claim 5 wherein the third step comprises,

a. monitoring the time modulation of the torque pulses in the drill string due to interruptions in the drill bit rotation.

8. A system for transmission of data from the lower end of a drill string in a wellbore during drilling to the top of the wellbore comprising,

a. means for measuring preselected parameters at the bottom of a drill string,

b. disconnectable drill bit torque pulse generating means on the lower end of said drill string for momentarily disconnecting a drill bit from the drill string for generating torque pulses in said drill string relative to said measured preselected parameters, and

c. monitoring means on the upper end of said drill string for monitoring the time modulation of said drill bit torque pulses in said drill string.

9. A system for transmission of data from the lower end of a drill string in a wellbore during drilling to the top of the wellbore comprising,

a. drill bit torque pulse generating means on the lower end of said drill string for generating torque pulses in said drill string,

b. controllable coupling means between said drill bit means and said drill string for controlled coupling and uncoupling of said drill bit means from said drill string for generating the drill bit torque pulses, and

c. monitoring means on the upper end of said drill string for monitoring said drill bit torque pulses in said drill string.

10. A system for transmission of data from the lower end of a drill string in a wellbore during drilling to the top of the wellbore comprising,

a. drill bit torque pulse generating means on the lower end of said drill string for generating torque pulses in said drill string,

b. controllable coupling means between said drill bit means and said drill string,

c. control means for said controllable coupling means,

d. said coupling means being responsive to said control means for controlled coupling and uncoupling of said drill bit means from said drill string for generating said drill bit torque pulses, and

e. monitoring means on the upper end of said drill string for monitoring said drill bit torque pulses in said drill string.

11. A data transmission system for monitoring wellbore drilling comprising,

a. drill string means for the wellbore having a lower end and an upper end,

b. torque applying means for rotating said drill string means,

c. drill bit means for the lower end of said drill string means for applying opposite torque to said rotating drill string,

d. controllable coupling means between said drill bit means and said drill string means,

e. control means for said controllable coupling means for controlled coupling and uncoupling of said drill bit means from said drill string means for generating the opposite torque pulses in said drill string means in spaced time intervals,

f. torque monitoring means at the upper end of said drill string means, and

g. said torque monitoring means being responsive to said control means for monitoring the time modulation of said opposite torque pulses in said drill string means from said drill bit means.

12. A data transmission system as recited in claim 11 wherein,

a. said control means comprises a solenoid valve for being activated and deactivated for operating said controllable coupling means.

13. A data transmission system as recited in claim 11 wherein,

a. said controllable coupling means is a fluid coupling device connected between said drill bit means and said drill string means.

14. A data transmission system as recited in claim 11 wherein,

a. said controllable coupling means is a fluid coupling device connected between said drill bit means and said drill string means, and

b. said control means is a solenoid valve for being activated and deactivated for operating said fluid coupling device.

15. A data transmission system for monitoring wellbore drilling comprising,

a. a drill string for extending into a wellbore for drilling thereof,

b. torque applying means connected to the top of said drill string for applying a torque to the drill string for rotating it in one direction,

c. a drill bit for applying an opposite torque to said rotating drill string for generating an opposite torque pulse in said drill string,

d. a controllable coupling connected between said drill bit and said drill string,

e. a control connected to said controllable coupling for coupling and uncoupling said drill bit from said drill string for generating opposite torque pulses in said drill string, and

f. torque monitoring means connected to the upper end of said drill string for monitoring the time modulation of said opposite torque pulses in said drill string from said drill bit.

16. A data transmission system as recited in claim 15 wherein,

a. said controllable coupling is a fluid coupling device connected between said drill bit and said lower end of the drill string.

17. A data transmission system as recited in claim 16 wherein,

a. said control is a solenoid valve connected to said fluid coupling device for operation thereof.

* * * * *