Aug. 7, 1962 K. LORBER 3,047,921

SAFETY PIN

Filed Sept. 6, 1960

FIG. 1

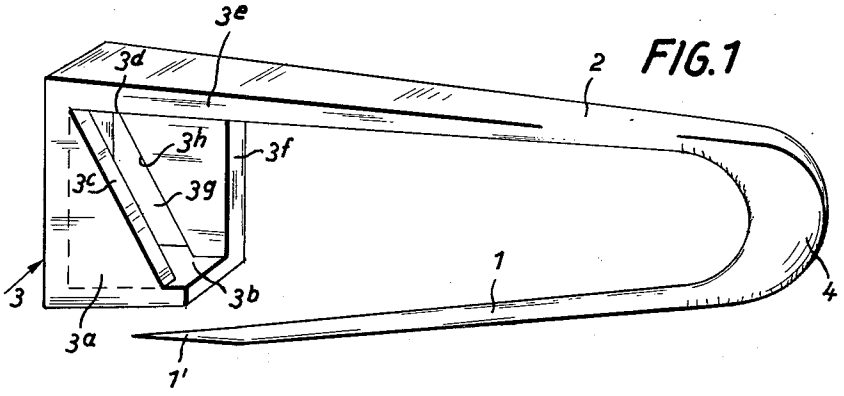

FIG. 2

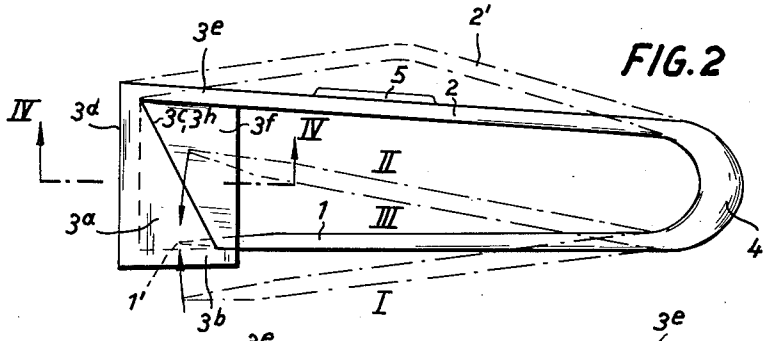

FIG. 3

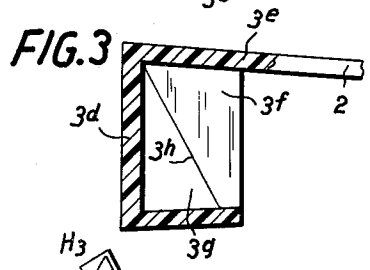

FIG. 7

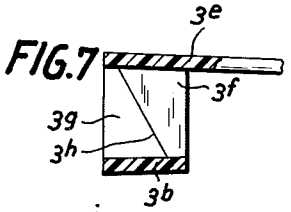

FIG. 8

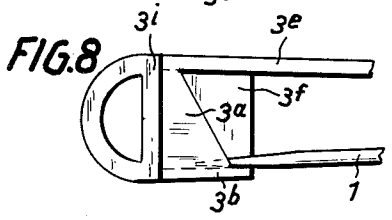

FIG. 6

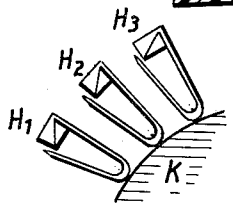

FIG. 4

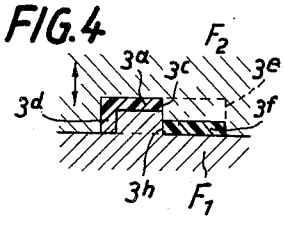

FIG. 5

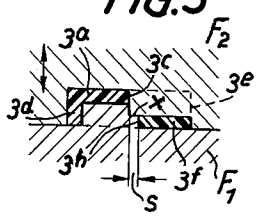

FIG. 9

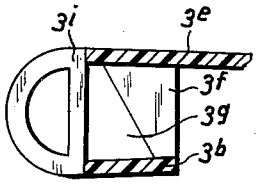

INVENTOR.
Kurt Lorber

BY
Michael S. Striker
Attorney

United States Patent Office

3,047,921
Patented Aug. 7, 1962

3,047,921

SAFETY PIN

Kurt Lorber, Aichelberg, Kreis Esslingen, Württemberg, Germany

Filed Sept. 6, 1960, Ser. No. 54,320
Claims priority, application Germany Sept. 4, 1959
5 Claims. (Cl. 24—161)

The present invention relates to a safety pin where the free, elastic pin leg can be swung into a recess provided in the front wall of a firm, flat and pocket-like head piece mounted on the end of the second pin leg.

In the conventional safety pins of this type, the pocket-like head piece is separately manufactured as a sheet-metal or plastic part which is then pressed on the end of a pin leg made of steel wire which at the other end is extended beyond a loop-like vertex into another leg ending in a point which can be swung into the cavity of the said pocket-like head piece.

Another known type of safety pin consists in a single injection molded plastic piece, wherein a leg of grooved section and flexional resistance is bent both ways to form a U, one leg of which forming the free, elastic pin leg provided with a pointed end and the other leg containing at its end the head piece to accommodate the pin point. The manufacture of such an injection molded plastic piece is difficult as the core required to obtain the grooved part must be capable of being extracted transversely to the closing and opening direction of the mold.

It is the object of this invention to manufacture a safety pin of the type mentioned at the outset but in the form of a single-piece injection molded plastic part, without having to provide any cores in the mold, by providing in the rear wall of the pocket-like head piece a recess in whose projection the pocket front wall is mounted horizontally to the plane of the pocket. Through this arrangement, the front wall and rear wall of the pocket-like head piece are fitted in such a manner that they will nowhere overlap while all other wall parts are mounted at a right angle to the pocket plane. To manufacture a plurality of work pieces, a mold consisting of two simple parts may therefore be used from which the finished work pieces can be ejected together with their sprues in the direction of the mold aperture when the mold is opened. These are the conditions required of mass production.

Safety pins designed in accordance with this invention are suited particularly for the fastening of labels to knitwear and hosiery articles and wide-meshed fabrics or for the pinning of badges. The cross-sectional design of the pin legs and/or pocket-like head piece may be varied to suit individual requirements.

The limit edges of the front wall and rear wall of the pocket-like head piece that face each other are preferably arranged exactly above each other and vertically to the plane of the pocket. The resultant cavities are of particular simplicity and the wide lateral surface of the pocket-like head piece is fully utilised since the adjacent limit edges of front wall and rear wall are in alignment with each other in the vertical direction to the pocket plane.

The invention is illustrated by the embodiments shown in the accompanying drawings, where

FIG. 1 is a perspective view of a highly enlarged safety pin designed according to this invention;

FIG. 2 is a plan view of the safety pin section;

FIG. 3 is the same sectional view wherein the front wall of the pocket-like head piece was omitted;

FIG. 4 is a section along line IV—IV of FIG. 3;

FIG. 5 shows an equivalent section of another embodiment of the invention;

FIG. 6 shows the arrangement of a plurality of mold cavities within the mold;

FIG. 7 is a view of a third embodiment corresponding to FIG. 3;

FIGS. 8 and 9 are views of a fourth embodiment corresponding to FIGS. 2 and 3.

The safety pin illustrated as an example of this invention has two pin legs 1 and 2 forming a U. Pin leg 1 ends in point 1'. The other pin leg 2 carries at its free end a flat, pocket-like head piece 3 into which pin leg 1 can be swung with its point 1'. The two pin legs 1 and 2 and the flat pocket-like head piece 3 jointly form a single plastic part that may be made of an impact-resistant polystyrene or a polyamide in the form of an injection molded piece.

In the mold, pin leg 1 assumes the position I illustrated in FIG. 1 and indicated by dots and dashes in FIG. 2. In this position the point of pin leg 1 is positioned laterally to the pocket-like head piece 3. From this position, pin leg 1 may be elastically bent around the vertex 4 formed by the two pin legs and swung toward pin leg 2. In its extreme bending position II, pin point 1' is moved through a recess in the front wall 3*a* of the pocket-like head piece 3 and then released so as to spring back, during which process the pin point is forced against and supported by the side wall 3*b* of the pocket-like head piece which is opposed to pin leg 2 (position III). The recess in front wall 3*a* of the pocket-like head piece 3 is formed in the present embodiment in such a manner that its limit edge 3*c* facing the vertex point 4 rises toward the corner between the pocket bottom 3*d* and the pocket side wall 3*e* formed by pin leg 2. The pocket rear wall 3*f* has a recess 3*g* which is limited by pocket bottom 3*d* and a portion of pocket side wall 3*b* locking pin point 1' in the closed position III of pin leg 1, as well as by edge 3*h* extending parallel to the limit edge 3*c* of pocket front wall 3*a*. The limit edge 3*h* of recess 3*g* of the pocket rear wall 3*f* is arranged so that the front wall 3*a* is completely within the projection of recess 3*g* which projection is vertical to the plane of the pocket. In the embodiments shown in FIGS. 1 through 4, recess 3*g* of the pocket rear wall 3*f* and pocket front wall 3*a* are congruent. Their limit edges 3*c* and 3*h* are therefore arranged above each other vertically to the plane of the pocket.

FIG. 4 of this embodiment shows a section extending through the pocket-like head piece 3 transversely to the limit edges 3*c* and 3*h* of pocket front wall and pocket rear wall, the two portions F1 and F2 of the mold being indicated by section lines. It will be observed that front wall 3*a* and rear wall 3*f* of the pocket do nowhere overlap in the direction (indicated by arrows) of the mold closing and opening motion and that the pocket bottom and the pocket side walls have only faces arranged in the closing and opening direction of the mold, so that the mold cavity for the pocket-like head piece 3 is obtained without the aid of cores and only with the aid of recesses and projections of the two mold portions F1 and F2.

FIG. 5 shows an embodiment corresponding to FIG. 3, wherein between the limit edges 3*c* and 3*h* of the pocket front wall 3*a* and pocket rear wall 3*f* of the pocket-like head piece 3 a clearance *s* is provided, as seen in the direction toward the pocket plane. With this design, too, a mold cavity may be obtained merely with the aid of projections and recesses in the two mold portions F1 and F2, while altogether dispensing with cores. Less favorable, but without involving a drawback, is the fact that the projection of one mold portion F1 which forms the pocket front wall 3*a* must be set off stepwise at *x* and that the useful surface of head piece 3 is diminished by the width of clearance *s*.

Within the mold a plurality of mold cavities H1, H2, H3 . . . may be provided which, as is shown in FIG. 6, are in circular arrangement around a central sprue K. Connection with the sprue is effected at the vertex 4 located between the two pin legs 1 and 2, which vertex has been enlarged in the direction of the plane between the pin legs in order to produce a large spreading space for the injection moldings. The effect produced by the enlarged vertex point, where the highest bending stress occurs when pin leg 1 is swung between positions I and II, is to increase the bending resistance and thus the spring power.

FIG. 2 illustrates with dash-and-dot lines 3' another design of pin leg 2 of the pocket-like head piece 3. In addition to this, many other variations are feasible. For example, the two pin legs 1 and 2 could form a circular ring.

In FIG. 2, pin leg 2 is provided with a lug 5 that may be used to carry a welded-on or glued-on badge.

In the embodiment shown in FIG. 7, the pocket bottom 3*d* was omitted, so that the recess 3*g* of the pocket rear wall 3*f* is open at the outer front side of the head piece 3 between the pocket side walls 3*b* and 3*e*.

In the embodiment shown in FIGS. 8 and 9, the pocket bottom was omitted, too. The pocket rear wall 3*f* is provided with a web 3*i* limiting recess 3*g* which is bridged by pocket front wall 3*a*. In the original embodiment, this web 3*i* is located outside the front faces of pocket side walls 3*b* and 3*e* and is designed to serve as a suspension ear. Instead of being designed as an ear, web 3*i* could also be designed for suspension and sliding purposes in connection with curtain guide rods.

Having thus fully disclosed my invention, what I claim is:

1. An integral safety pin made from plastic material and comprising, in combination, a head member having a pair of spaced side walls connected to each other by substantially triangular connecting walls extending spaced from each other transverse to the side walls to define a pocket therebetween, said triangular connecting walls being offset with respect to each other in longitudinal direction of said side walls, each of said triangular walls having a base portion and an edge face extending at an acute angle to said base portion, the base portion of one of said triangular connecting walls being integral with one of said side walls and the base portion of the other of said triangular walls being integral with the other of side walls with the edge faces of said triangular walls facing in opposite directions; and a U-shaped leg member having one leg portion integral with and extending from one end of one side wall in direction of the latter and another flexible leg portion having a free pointed end extending into said pocket and being adapted to be flexed past the edge face of one of said triangular walls out of said pocket, whereby due to the specific arrangement of said triangular connecting walls said safety pin may be integrally molded without the use of movable core members.

2. An integral safety pin made from plastic material and comprising, in combination, a head member having a pair of spaced side walls connected to each other by substantially triangular connecting walls extending spaced from each other transverse to the side walls to define a pocket therebetween, said triangular connecting walls being offset with respect to each other in longitudinal direction of said side walls, each of said triangular walls having a base portion and an edge face extending at an acute angle to said base portion, the base portion of one of said triangular connecting walls being integral with one of said side walls and the base portion of the other of said triangular walls being integral with the other of side walls with the edge faces of said triangular walls facing in opposite directions and arranged substantially in one plane; and a U-shaped leg member having one leg portion integral with and extending from one end of one side wall in direction of the latter and another flexible leg portion having a free pointed end extending into said pocket and being adapted to be flexed past the edge face of one of said triangular walls out of said pocket, whereby due to the specific arrangement of said triangular connecting walls said safety pin may be integrally molded without the use of movable core members.

3. An integral safety pin made from plastic material and comprising, in combination, a head member having a pair of spaced side walls connected at one end thereof by a bottom wall and having a pair of substantially triangular connecting walls extending spaced from each other transverse to said side walls and said bottom walls so as to define a pocket therebetween, one of said triangular connecting walls being integrally connected at two sides thereof to said bottom wall and one of said side walls, respectively, and having a free edge face inclined at an acute angle to said one side wall and facing away from said bottom wall and the other of said triangular walls being integrally connected with one side thereof to the other of said side walls and having a free edge face inclined at an acute angle to said other side wall and facing the free edge face of said one triangular wall; and a U-shaped leg member having one leg portion integral with and extending from one end of one side wall in direction of the latter and another flexible leg portion having a free pointed end extending into said pocket and being adapted to be flexed past the edge face of said one of said triangular walls out of said pocket, whereby due to the specific arrangement of said triangular connecting walls said safety pin may be integrally molded without the use of movable core members.

4. An integral safety pin made from plastic material and comprising, in combination, a head member having a pair of spaced side walls connected at one end thereof by a bottom wall and having a pair of substantially triangular connecting walls extending spaced from each other transverse to said side walls and said bottom walls so as to define a pocket therebetween, one of said triangular connecting walls being integrally connected at two sides thereof to said bottom wall and one of said side walls, respectively, and having a free edge face inclined at an acute angle to said one side wall and facing away from said bottom wall and the other of said triangular walls being integrally connected with one side thereof to the other of said side walls and having a free edge face inclined at an acute angle to said other side wall and being located substantially in one plane with the free edge face of said one triangular wall; and a U-shaped leg member having one leg portion integral with and extending from one end of one side wall in direction of the latter and another flexible leg portion having a free pointed end extending into said pocket and being adapted to be flexed past the edge face of said one of said triangular walls out of said pocket, whereby due to the specific arrangement of said triangular connecting walls said safety pin may be integrally molded without the use of movable core members.

5. An integral safety pin made from plastic material and comprising, in combination, a pair of side plates extending superimposed upon and spaced from each other; a U-shaped leg member having a first leg portion integrally

connected to one end and forming a continuation of one of said side plates and a second flexible leg portion having a pointed free end extending between said side plates and being biased to engage the other of said side plates at an inner face thereof directed toward said one side plate; and a pair of connecting plates integral with and extending spaced from each other transversely to and between said side plates for connecting the same, said connecting plates being offset with respect to each other so as to form in the plane of each connecting plate a free space opposite the other connecting plate, one of said connecting plates having a free edge face, said free edge face having a face

portion which is distant from the other side plate and which is, measured in longitudinal direction of said leg member, closer to the other end of said one side plate than the pointed free end of said second leg portion so that said pointed free end may be flexed past said face portion out of the space between said side plates.

References Cited in the file of this patent

UNITED STATES PATENTS

2,375,239	Munyer	May 8, 1945
2,904,865	Ziegenbein	Sept. 22, 1959