Oct. 16, 1956 A. A. JOYAL 2,766,785

WOOD WORKING JIG

Filed April 25, 1955 2 Sheets-Sheet 1

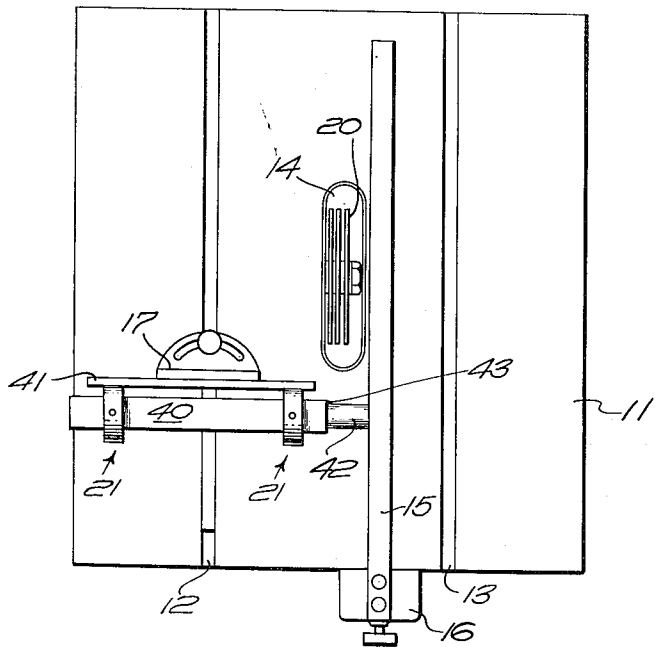

FIG. 1

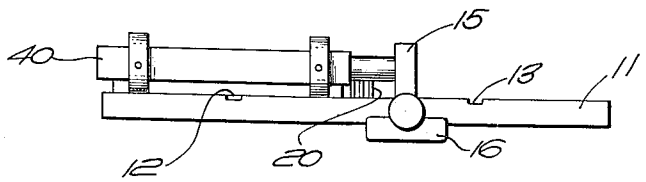

FIG. 2

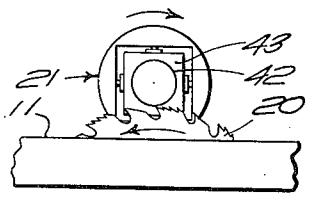

FIG. 3

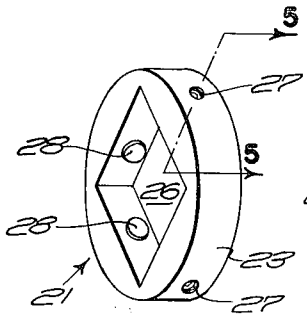

FIG. 4

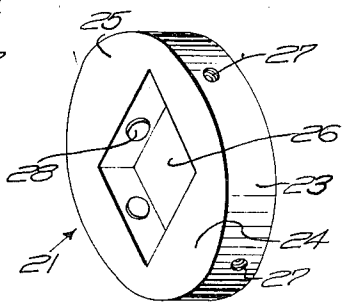

FIG. 6

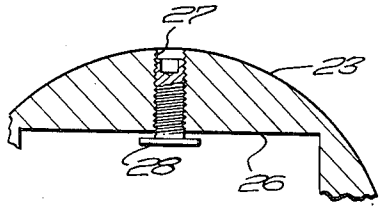

FIG. 5

INVENTOR.
ARMAND A. JOYAL
BY
William Frederick Werner
ATTORNEY

Oct. 16, 1956 A. A. JOYAL 2,766,785

WOOD WORKING JIG

Filed April 25, 1955 2 Sheets-Sheet 2

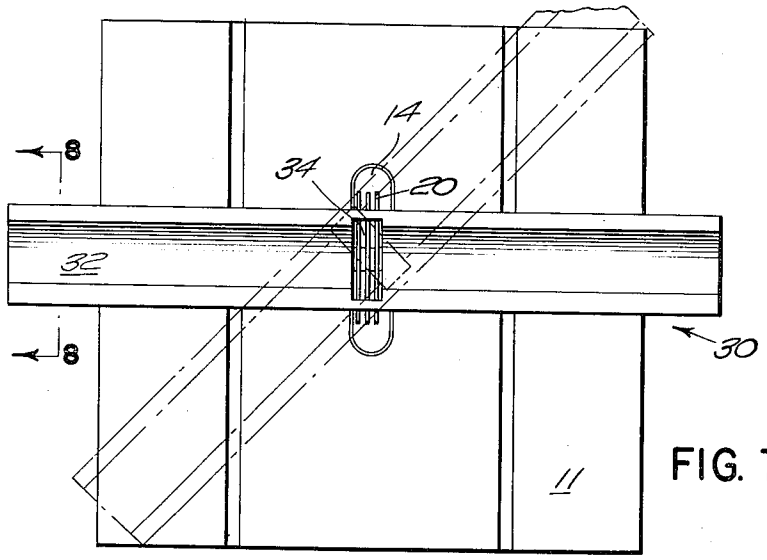

FIG. 7

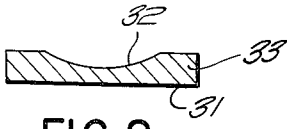

FIG. 8

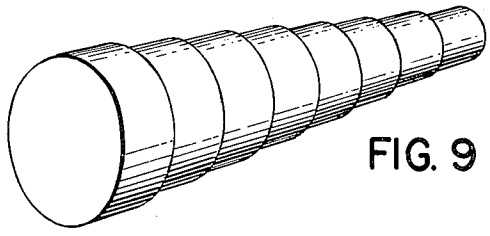

FIG. 9

FIG. 10

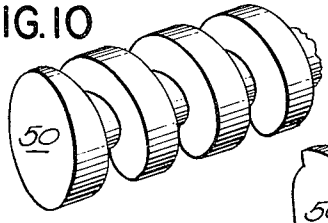

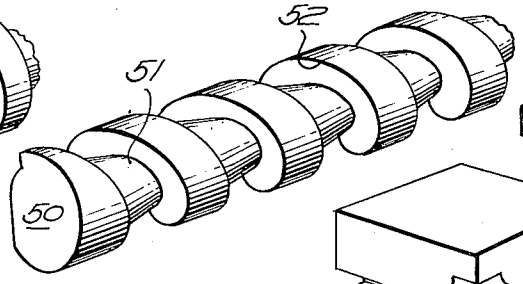

FIG. 11

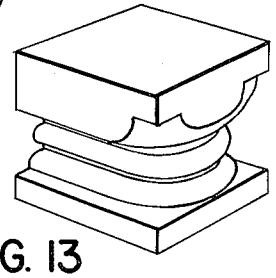

FIG. 13

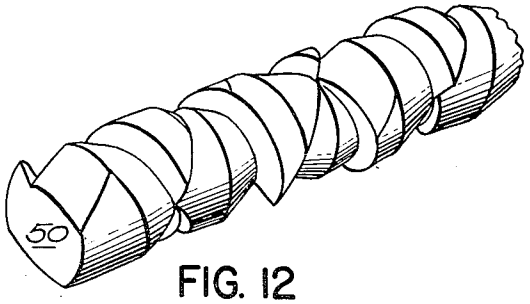

FIG. 12

INVENTOR.
ARMAND A. JOYAL
BY
William Frederick Werner
ATTORNEY

United States Patent Office 2,766,785 Patented Oct. 16, 1956

2,766,785

WOOD WORKING JIG

Armand A. Joyal, Pawtucket, R. I.

Application April 25, 1955, Serial No. 503,598

5 Claims. (Cl. 144—136)

This invention relates to a wood working jig and more particularly to a portable tool, which when used in co-operation with a circular table saw, produces a wide variety of forms and shapes in wood.

An object of the present invention is to provide an inexpensive jig, which when used with a circular table saw, will produce forms in wood now produced with expensive machinery.

Another object of the present invention is to provide an inexpensive jig, easily manipulated, for use by the household mechanic to produce a wide variety of forms and shapes in wood and soft metal.

And still another object of the present invention is to provide a fixture for use with a circular table saw, which once having been set to cut a tenon of a certain diameter, no further adjustments are necessary, to reproduce the same diameter tenon over and over again, in production fashion.

Other objects of the present invention will become apparent in part and will be pointed out in part in the following specification and claims.

In the past an engine lathe was employed to produce the results achieved by the instant jig. Household mechanics can ill afford the expense of acquiring an expensive engine lathe, even when possessed with the skill necessary to operate such a lathe. The present jig, totally inexpensive, can be used in conjunction with a hobbyist's circular saw table. This inexpensive jig will greatly increase the variety of forms and shapes, nature and type of work able to be produced by the circular saw table.

Like reference numerals refer to like parts in the accompanying drawings, wherein:

Figure 1 is a plan view of a circular saw table and the new and improved wood working jig.

Figure 2 is a side elevational view of Figure 1.

Figure 3 is a fragmentary right end elevational view of Figure 1 showing the new jig, circular saw and saw table.

Figure 4 is a perspective view of one form of the new jig.

Figure 5 is a fragmentary cross sectional view taken along line 5—5 of Figure 4.

Figure 6 is a perspective view of the new jig showing a modified form of Figure 4.

Figure 7 is a plan view of a circular saw table showing a new fixture used in conjunction with the new jig as both co-operate with the circular saw and circular saw table.

Figure 8 is a cross sectional view through the new fixture, taken along line 8—8 of Figure 7.

Figure 9 is a perspective view of a sample form produced by the co-operation of the new jig and circular saw table.

Figure 10 is a perspective view of still another sample form produced by the instant invention.

Figure 11 is a perspective view of still another sample form produced by the instant invention.

Figure 12 is a perspective view of still another sample form produced by the instant invention.

Figure 13 is a perspective view of still another sample form produced by the instant invention.

Referring to the drawings, Figure 1 depicts a conventional circular saw table consisting of a bed 11 provided with grooves 12, 13 and a saw opening 14. A work fence 15 is slidably mounted upon bed 11 and is provided with a clamp 16 which fastens to the edge of bed 11. An angle gauge 17 is slidably mounted in grooves 12 or 13. A single saw blade 20 or a multiple number of saw blades forming a gang, are adjustably mounted in a vertical direction, to protrude above the level of bed 11. The saw blades 20 are suitably rotated. This description relates to structure well known in the art.

The nub of the present invention relates to a collar, generally indicated at 21, whose outside diameter 23 takes a geometric shape, such as a true circle shown in Figures 3 and 4 or two opposite ellipses 24, 25 as shown in Figure 6. If the collar 21 is considered as consisting of two halves; opposite halves have the same shape. Each half may have any desired curvature on the periphery or outside diameter 23.

An aperture 26 shown as being square but which may take any geometric shape, such as being round or triangular, is provided axially of outside diameter 23. A plurality of threaded areas 27 are provided in the body of collar 21. Clamping screws 28 are adapted to be adjustably positioned in threaded areas 27.

A fixture, generally indicated by reference character 30, see Figure 7, consists of a body 33 having a smooth bottom 31, a depression 32 in the top of body 33 and an aperture 34.

In operation see Figure 1 a square block of wood 40 will be clamped firmly, by means of clamping screws 28, in the apertures 26 of two collars 21. A work fence 15 will be secured to bed 11 a predetermined distance from saw blades 20. Work fence 15 will be parallel to saw blades 20 for the purposes of this illustration. Angle gauge 17 will be slidably mounted in groove 12 with the face of the plate 41 perpendicular to work fence 15 and saw blades 20. Saw blades 20 will be rotating. Collars 21 will be manually held against plate 41. End 42 of wood block 40 will be presented to saw blades 20 as angle gauge 17 is slid back and forth in groove 12. Collars 21 will roll across bed 11. End 42 will be passed back and forth across saw blades 20 in a cross wise table direction and back and forth across saw blades 20 in a lengthwise motion, until the end 42 abuts fence 15, thereby producing a tenon of a length as determined by the position of fence 15, on end 42 of wood block 40. A square shoulder 43 on tenon 42 of predetermined length, which can be duplicated, is produced.

Referring to Figure 7, fixture 30 is free to be positioned at any angle on bed 11, in the relation of aperture 34 to saw blades 20. In the selected position, fixture 30 is secured to bed 11 by means of C clamps, which are well known in the art. Fixture 30 provides a grooved guideway in the form of a depression 32 for collars 21 to slide in, toward or away from saw blades 20. A round block of wood 50 will be firmly held in apertures 26 of two collars 21 by means of clamping screws 28. Collars 21 will be secured on opposite extreme ends of wood block 50. The distance between the collars 21 is the working area of saw 20. Block 50 will be fed to saw blades 20. Once saw blades 20 contact wood block 50 they will draw the block into the blades. The angular relationship existing between fixture 30 and blades 20, determines the design cut in the periphery of block 50 as shown in Figures 10, 11 and 12. The amount saw

blades **20** project above bed **11** determines the depth of the cut of saw blades **20** into block **50**.

When the design is cut into wood block **50**, collars **21** are removed and the area of the wood block held in collars **21** is cut off if the uncut ends are not wanted.

If the circular saw is able to be tilted on an angle in relation to bed **11** instead of being perpendicular to bed **11** as shown in Figure 1, then the designs shown in Figures 11 and 12 can be made. That is the cores **51** are tapered and the sides **52** of the spiral are angular. In Figure 11 wood block **50** was passed to the saw blade **20**, one time in one direction. In Figure 12 wood block **50** was passed to saw blade **20** two times, first from one end and then from the opposite end. This design is called "petals of roses."

The contour of periphery **23** of collars **21** determines the design in wood block **50** in that the rolling of periphery **23** across bed **11** or in depression **32**, varies the depth of wood block **50** presented to saw blade **20**.

Having shown and described preferred embodiments of the present invention, by way of example, but realizing that structural changes could be made and other examples given without departing from either the spirit or scope of this invention,

What I claim is:

1. A wood working jig for use with the saw blade of a circular saw table having a flat bed, a fixture having a depression and an aperture through which said saw blade projects, said fixture being clamped to said flat bed in angular relation to said saw blade, a collar having an aperture, a plurality of clamping screws in said collar, a work piece secured in said aperture by means of said clamping screws, said collar slidingly engaging said depression for rotation therein and for movement toward and away from said saw blade.

2. A wood working jig for use in co-operation with the saw blade of a circular saw table having an adjustable work fence and a slidingly mounted angle gauge, a work piece, a plurality of collar like members, each having an aperture, a plurality of clamping screws in each collar, said work piece being secured in the aperture of each collar by means of said clamping screws, the end of said work piece abutting said work fence, said plurality of collars abutting said angle gauge and said work piece engaging said saw blade as said collars slidingly and rotatingly engage said circular saw table and said angle gauge.

3. A wood working jig for use in combination with a table-type circular saw unit, to cut an integral dowel on one end portion of an elongated wooden work piece, the unit including a table, a driven circular saw blade projecting above said table, a work fence and an angle gauge adjustably secured to said table, said wood working jig comprising two collar like members, each having an aperture, a plurality of clamping screws in each collar, said elongated wooden work piece being secured centrally in the aperture of each collar by means of said clamping screws, with an end portion projecting beyond one collar for cutting engagement with the

circular saw blade, said collar embodying a circular peripheral contour, said contour engaging said table and said angle gauge with the centerline of said work piece perpendicular to the centerline of said driven circular saw blade, and which is rotatable about the centerline of said work piece and for sliding toward and away from said work fence to present the projecting end portion to said circular saw blade.

4. A jig for use in combination with a table-type circular cutter unit, to cut an integral dowel on one end portion of an elongated work piece, the unit including a table, a driven circular cutter projecting above said table, a work fence and an angle gauge adjustably secured to said table, said jig comprising two collar like members, each having an aperture, a plurality of clamping screws in each collar, said elongated work piece located and secured centrally in the aperture of each collar by means of said clamping screws with an end portion projecting beyond one collar for cutting engagement with the circular cutter, said collar embodying an irregular peripheral contour, said contour of both collar like members engaging said table and said angle gauge and rotatable about the center line of said work piece and slidable toward and away from said work fence to present the projecting end portion to the circular cutter.

5. A jig for use in combination with a table-type circular cutter unit, the unit including a table, a driven circular cutter projecting above said table, a fixture consisting of a body having a smooth bottom slidable upon said table, a depression in the top of said body and a cutter aperture approximately mid-way the length of said body, means to secure said fixture angularly to said table with said circular cutter projecting through said aperture, said jig comprising two collar like members, each having an aperture, a plurality of clamping screws in each collar, an elongated work piece secured centrally in the aperture of each collar by means of said clamping screws, said collars slidably engaging said depression with one collar on each side of said circular cutter presenting said work piece adjacent one collar to said circular cutter and manually rotating said work piece through rotation of said collars in said depression until said work piece is presented to said circular cutter the full length of said work piece between said collars.

References Cited in the file of this patent

UNITED STATES PATENTS

1,482,224	Engman	Jan. 29, 1924
1,694,685	Hein	Dec. 11, 1928
2,237,556	Hedgpeth	Apr. 8, 1941
2,556,415	Buck	June 12, 1951
2,710,633	Oberg	June 14, 1955
2,715,924	Norris	Aug. 23, 1955

FOREIGN PATENTS

21,455	Austria	Sept. 25, 1905